| DATE REVISED | DATE FILMED | DATE REVISED | DATE FILMED | FED. RD. DIST. NO. | STATE | FED. AID PROJ. NO. | SHEET NO. | TOTAL SHEET |
|---|---|---|---|---|---|---|---|---|
| | | | | 6 | ARK. | | | |
| | | | | JOB NO. | | 061451 | 1 | 130 |
| | | | | ② | ARKANSAS TOURIST INFORMATION CENTER (WHITE RIVER) (S) | | | |

"THIS IS A FULLY CONTROLLED ACCESS FACILITY"

# ARKANSAS STATE HIGHWAY AND TRANSPORTATION DEPARTMENT
## CONSTRUCTION PLANS

# ARKANSAS TOURIST INFORMATION CENTER
# (WHITE RIVER) (S)

PRAIRIE COUNTY

ROUTE 40 SECTION 42

## F.A.P. STPE-ENHN(481)
## JOB 061451

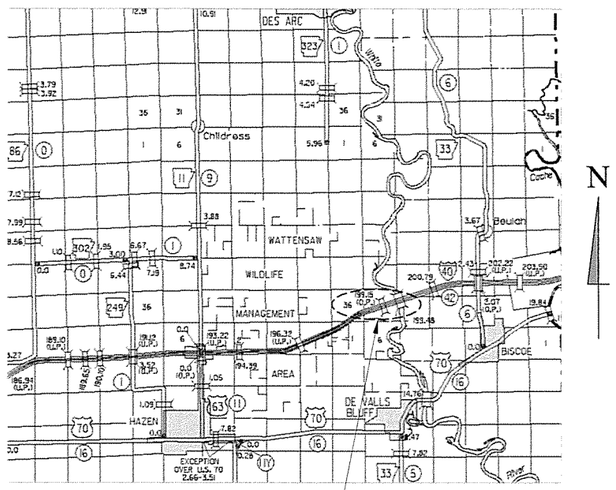


PROJECT LOCATION
TOURIST INFORMATION CENTER

VICINITY MAP

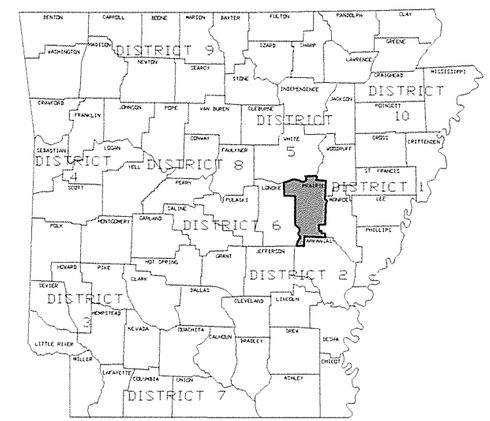


ARKANSAS HIGHWAY DISTRICT 6

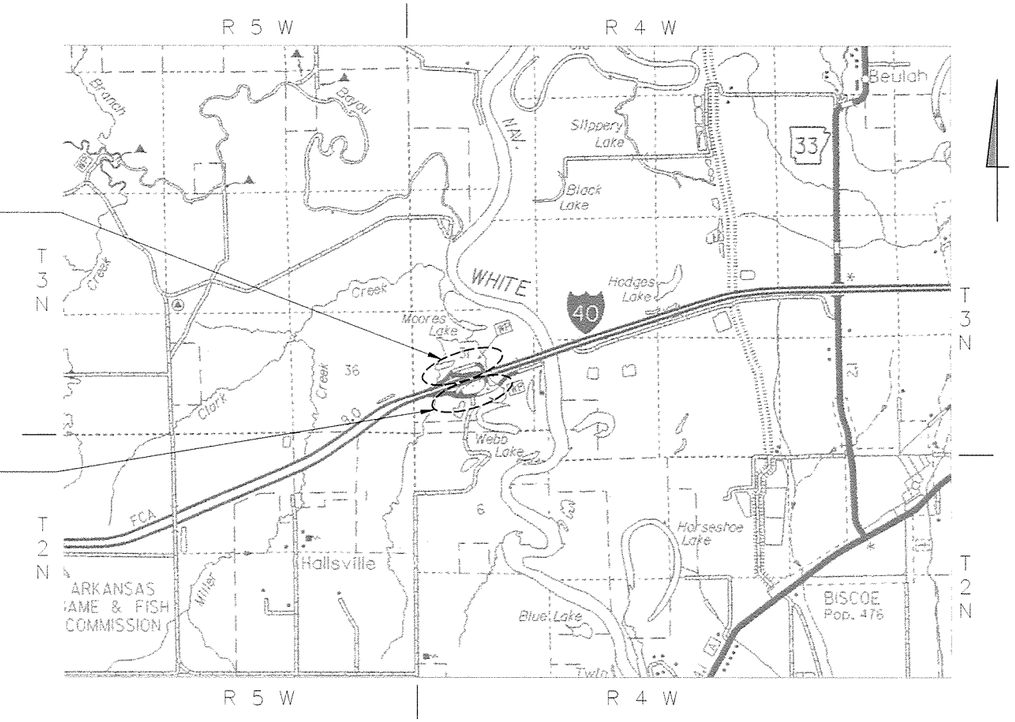


PROJECT LOCATION
TOURIST INFORMATION CENTER
(WESTBOUND)

(.7 MILE WEST OF WHITE RIVER BRIDGE
5.8 MILES EAST OF HWY. 63 (EXIT 193)
LOG MILE 199.15)

PROJECT LOCATION
TOURIST INFORMATION CENTER
(EASTBOUND)

LOCATION MAP
(NOT TO SCALE)

PROJECT COORDINATES

MID-POINT OF PROJECT (EASTBOUND)
LAT. = N 34° 50' 09"
LONG. = W 91° 28' 06"

MID-POINT OF PROJECT (WESTBOUND)
LAT. = N 34° 50' 13"
LONG. = W 91° 28' 07"

CERTIFICATE OF AUTHORIZATION
GARVER LLC
No. 766
ARKANSAS ENGINEERS

STATE OF ARKANSAS
LICENSED PROFESSIONAL ENGINEER
No. 10432
JOHN C. GRAHAM, II
9/30/15

P.E. JOB 061451
NON-PART.

# ARKANSAS TOURIST INFORMATION CENTER (WHITE RIVER) - SHEET INDEX

| SHEET | NO | NAME | REV NO | DATE | BY | APPRV'D BY | DESCRIPTION |
|---|---|---|---|---|---|---|---|
| G-001 | 1 | COVER SHEET | - | - | - | - | - |
| G-002 | 2 | SHEET INDEX | - | - | - | - | - |
| G-003 | 3 | CODE ANALYSIS | - | - | - | - | - |
| G-004 | 4 | GOVERNING SPECIFICATIONS | - | - | - | - | - |
| G-005 | 5 | SUMMARY OF QUANTITIES | - | - | - | - | - |
| C-001 | 6 | GENERAL NOTES AND LEGEND | - | - | - | - | - |
| C-002 | 7 | OVERALL SURVEY PLAN | - | - | - | - | - |
| C-003 | 8 | OVERALL SITE PLAN | - | - | - | - | - |
| C-101 | 9 | TOURIST INFORMATION CENTER AND MAINTENANCE BUILDING DEMOLITION PLAN (WESTBOUND) | - | - | - | - | - |
| C-102 | 10 | TOURIST INFORMATION CENTER AND MAINTENANCE BUILDING SITE PLAN (WESTBOUND) | - | - | - | - | - |
| C-103 | 11 | TOURIST INFORMATION CENTER AND MAINTENANCE BUILDING GRADING AND EROSION CONTROL PLAN (WESTBOUND) | - | - | - | - | - |
| C-104 | 12 | TOURIST INFORMATION CENTER AND MAINTENANCE BUILDING UTILITY PLAN I (WESTBOUND) | - | - | - | - | - |
| C-105 | 13 | TOURIST INFORMATION CENTER AND MAINTENANCE BUILDING UTILITY PLAN II (WESTBOUND) | - | - | - | - | - |
| C-111 | 14 | TOURIST INFORMATION CENTER DEMOLITION PLAN (EASTBOUND) | - | - | - | - | - |
| C-112 | 15 | TOURIST INFORMATION CENTER SITE PLAN (EASTBOUND) | - | - | - | - | - |
| C-113 | 16 | TOURIST INFORMATION CENTER GRADING AND EROSION CONTOL PLAN (EASTBOUND) | - | - | - | - | - |
| C-114 | 17 | TOURIST INFORMATION CENTER UTILITY PLAN (EASTBOUND) | - | - | - | - | - |
| C-131 | 18 | TRUCKER-VENDING BUILDING DEMOLITION PLAN (EASTBOUND AND WESTBOUND) | - | - | - | - | - |
| C-132 | 19 | TRUCKER-VENDING BLDG SITE AND UTILITY PLAN (EASTBOUND AND WESTBOUND) | - | - | - | - | - |
| C-133 | 20 | TRUCKER-VENDING BUILDING GRADING AND EROSION CONTROL PLAN (EASTBOUND AND WESTBOUND) | - | - | - | - | - |
| C-500 | 21 | DETAILS I | - | - | - | - | - |
| C-501 | 22 | DETAILS II | - | - | - | - | - |
| C-502 | 23 | DETAILS III | - | - | - | - | - |
| SE-101 | 24 | EXTERIOR AREA LIGHTING PLAN | - | - | - | - | - |
| TEC-1 | 25 | TEMPORARY EROSION CONTROL DEVICES | - | 12/15/11 | - | - | - |
| TEC-3 | 26 | TEMPORARY EROSION CONTROL DEVICES | - | 11/3/94 | - | - | - |
| WF-3 | 27 | CHAIN LINK FENCE | - | 11/17/10 | - | - | - |
| WR-2 | 28 | WHEELCHAIR RAMPS ALTERATIONS ONLY | - | 10/09/03 | - | - | - |
| A-001 | 29 | GENERAL NOTES & LEGEND | - | - | - | - | - |
| A-002 | 30 | FINISH SCHEDULE AND MATERIAL LEGENDS | - | - | - | - | - |
| A-003 | 31 | DOOR SCHEDULE & DOOR AND FRAME ELEVATIONS | - | - | - | - | - |
| A-004 | 32 | WINDOW ELEVATIONS | - | - | - | - | - |
| A-005 | 33 | DOOR DETAILS | - | - | - | - | - |
| A-006 | 34 | STANDARD WALL DETAILS | - | - | - | - | - |
| A-007 | 35 | WINDOW DETAILS | - | - | - | - | - |
| A-101 | 36 | TOURIST INFORMATION CENTER FLOOR PLAN | - | - | - | - | - |
| A-102 | 37 | TOURIST INFORMATION CENTER DIMENSIONED FLOOR PLAN | - | - | - | - | - |
| A-103 | 38 | TOURIST INFORMATION CENTER PARTIAL ENLARGED FLOOR PLAN | - | - | - | - | - |
| A-104 | 39 | TOURIST INFORMATION CENTER ROOF AND REFLECTED CEILING PLANS | - | - | - | - | - |
| A-121 | 40 | MAINTENANCE BUILDING FLOOR PLAN | - | - | - | - | - |
| A-122 | 41 | MAINTENANCE BUILDING REFLECTED CEILING AND ROOF PLANS | - | - | - | - | - |
| A-131 | 42 | TRUCKER-VENDING BUILDING FLOOR PLAN | - | - | - | - | - |
| A-132 | 43 | TRUCKER-VENDING BUILDING ROOF AND REFLECTED CEILING PLANS | - | - | - | - | - |
| A-201 | 44 | TOURIST INFORMATION CENTER BUILDING ELEVATIONS | - | - | - | - | - |
| A-202 | 45 | TOURIST INFORMATION CENTER BUILDING ELEVATIONS | - | - | - | - | - |
| A-221 | 46 | MAINTENANCE BUILDING ELEVATIONS | - | - | - | - | - |
| A-231 | 47 | TRUCKER-VENDING BUILDING BUILDING ELEVATIONS | - | - | - | - | - |
| A-232 | 48 | TRUCKER-VENDING BUILDING BUILDING ELEVATIONS | - | - | - | - | - |
| A-301 | 49 | TOURIST INFORMATION CENTER BUILDING SECTIONS | - | - | - | - | - |
| A-302 | 50 | TOURIST INFORMATION CENTER BUILDING SECTIONS | - | - | - | - | - |
| A-303 | 51 | TOURIST INFORMATION CENTER BUILDING SECTIONS | - | - | - | - | - |
| A-304 | 52 | TOURIST INFORMATION CENTER WALL SECTIONS | - | - | - | - | - |
| A-305 | 53 | TOURIST INFORMATION CENTER WALL SECTIONS | - | - | - | - | - |
| A-306 | 54 | TOURIST INFORMATION CENTER WALL SECTIONS | - | - | - | - | - |
| A-307 | 55 | TOURIST INFORMATION CENTER WALL SECTIONS | - | - | - | - | - |
| A-308 | 56 | TOURIST INFORMATION CENTER WALL SECTIONS | - | - | - | - | - |
| A-309 | 57 | TOURIST INFROMATION CENTER WALL SECTIONS | - | - | - | - | - |
| A-310 | 58 | TOURIST INFORMATION CENTER WALL SECTIONS | - | - | - | - | - |
| A-321 | 59 | MAINTENANCE BUILDING BUILDING SECTION | - | - | - | - | - |
| A-322 | 60 | MAINTENANCE BUILDING WALL SECTIONS | - | - | - | - | - |
| A-331 | 61 | TRUCKER-VENDING BUILDING BUILDING SECTIONS | - | - | - | - | - |
| A-332 | 62 | TRUCKER-VENDING BUILDING WALL SECTIONS | - | - | - | - | - |
| A-333 | 63 | TRUCKER-VENDING BUILDING WALL SECTIONS | - | - | - | - | - |
| A-401 | 64 | TOURIST INFORMATION CENTER INTERIOR ELEVATIONS | - | - | - | - | - |
| A-431 | 65 | TRUCKER-VENDING BUILDING INTERIOR ELEVATIONS | - | - | - | - | - |

# ARKANSAS TOURIST INFORMATION CENTER (WHITE RIVER) - SHEET INDEX

| SHEET | NO | NAME | REV NO | DATE | BY | APPRV'D BY | DESCRIPTION |
|---|---|---|---|---|---|---|---|
| A-501 | 66 | TOURIST INFORMATION CENTER DETAILS | - | - | - | - | - |
| A-502 | 67 | TOURIST INFORMATION CENTER DETAILS | - | - | - | - | - |
| A-503 | 68 | TOURIST INFORMATION CENTER DETAILS | - | - | - | - | - |
| A-504 | 69 | TOURIST INFORMATION CENTER DETAILS | - | - | - | - | - |
| A-505 | 70 | TOURIST INFORMATION CENTER DETAILS | - | - | - | - | - |
| A-506 | 71 | TOURIST INFORMATION CENTER DETAILS | - | - | - | - | - |
| A-507 | 72 | TOURIST INFORMATION CENTER DETAILS | - | - | - | - | - |
| A-531 | 73 | TRUCKER-VENDING BUILDING DETAILS | - | - | - | - | - |
| A-532 | 74 | TRUCKER-VENDING BUILDING DETAILS | - | - | - | - | - |
| A-533 | 75 | TRUCKER-VENDING BUILDING DETAILS | - | - | - | - | - |
| A-534 | 76 | TRUCKER-VENDING BUILDING DETAILS | - | - | - | - | - |
| A-601 | 77 | TOURIST INFORMATION CENTER FLOOR PATTERN PLAN | - | - | - | - | - |
| S-001 | 78 | GENERAL NOTES | - | - | - | - | - |
| S-002 | 79 | GENERAL NOTES | - | - | - | - | - |
| S-003 | 80 | TOURIST INFORMATION CENTER WIND UPLIFT DIAGRAM (ROOF) | - | - | - | - | - |
| S-101 | 81 | TOURIST INFORMATION CENTER FOUNDATION PLAN | - | - | - | - | - |
| S-102 | 82 | TOURIST INFORMATION CENTER ROOF FRAMING PLAN | - | - | - | - | - |
| S-121 | 83 | MAINTENANCE BUILDING FOUNDATION AND ROOF FRAMING PLANS | - | - | - | - | - |
| S-131 | 84 | TRUCKER-VENDING BUILDING FOUNDATION AND ROOF FRAMING PLANS | - | - | - | - | - |
| S-301 | 85 | TOURIST INFORMATION CENTER FOUNDATION SECTIONS | - | - | - | - | - |
| S-302 | 86 | TOURIST INFORMATION CENTER FRAMING SECTIONS | - | - | - | - | - |
| S-303 | 87 | TOURIST INFORMATION CENTER FRAMING SECTIONS | - | - | - | - | - |
| S-304 | 88 | TOURIST INFORMATION CENTER FRAMING SECTIONS | - | - | - | - | - |
| S-305 | 89 | TOURIST INFORMATION CENTER FRAMING SECTIONS | - | - | - | - | - |
| S-306 | 90 | TOURIST INFORMATION CENTER FRAMING SECTIONS | - | - | - | - | - |
| S-307 | 91 | TOURIST INFORMATION CENTER FRAMING SECTIONS | - | - | - | - | - |
| S-308 | 92 | TOURIST INFORMATION CENTER FRAMING SECTIONS | - | - | - | - | - |
| S-321 | 93 | MAINTENANCE BUILDING FOUNDATION SECTIONS | - | - | - | - | - |
| S-322 | 94 | MAINTENANCE BUILDING FRAMING SECTIONS | - | - | - | - | - |
| S-331 | 95 | TRUCKER-VENDING BUILDING FOUNDATION SECTIONS | - | - | - | - | - |
| S-332 | 96 | TRUCKER-VENDING BUILDING FOUNDATION SECTIONS | - | - | - | - | - |
| S-333 | 97 | TRUCKER-VENDING BUILDING FRAMING SECTIONS | - | - | - | - | - |
| S-334 | 98 | TRUCKER-VENDING BUILDING FRAMING SECTIONS | - | - | - | - | - |
| S-335 | 99 | TRUCKER-VENDING BUILDING FRAMING SECTIONS | - | - | - | - | - |
| S-336 | 100 | TRUCKER-VENDING BUILDING FRAMING SECTIONS | - | - | - | - | - |
| S-501 | 101 | TYPICAL DETAILS | - | - | - | - | - |
| S-502 | 102 | TYPICAL DETAILS | - | - | - | - | - |
| M-101 | 103 | TOURIST INFORMATION CENTER MECHANICAL PLAN | - | - | - | - | - |
| M-121 | 104 | MAINTENANCE BUILDING MECHANICAL PLAN | - | - | - | - | - |
| M-131 | 105 | TRUCKER-VENDING BUILDING MECHANICAL PLAN | - | - | - | - | - |
| M-201 | 106 | TOURIST INFORMATION CENTER MECHANICAL DETAILS | - | - | - | - | - |
| P-001 | 107 | LEGEND, ABBREVIATIONS AND NOTES | - | - | - | - | - |
| P-101 | 108 | TOURIST INFORMATION CENTER SANITARY SEWER PIPING PLAN | - | - | - | - | - |
| P-102 | 109 | TOURIST INFORMATION CENTER DOMESTIC WATER PIPING PLAN | - | - | - | - | - |
| P-131 | 110 | TRUCKER-VENDING BUILDING SANITARY SEWER PIPING PLAN | - | - | - | - | - |
| P-132 | 111 | TRUCKER-VENDING BUILDING DOMESTIC WATER PIPING PLAN | - | - | - | - | - |
| P-501 | 112 | DETAILS I | - | - | - | - | - |
| P-502 | 113 | DETAILS II | - | - | - | - | - |
| P-503 | 114 | DETAILS III | - | - | - | - | - |
| P-601 | 115 | SCHEDULES I | - | - | - | - | - |
| P-602 | 116 | SCHEDULES II | - | - | - | - | - |
| P-603 | 117 | RISER DIAGRAMS I | - | - | - | - | - |
| P-604 | 118 | RISER DIAGRAMS II | - | - | - | - | - |
| P-605 | 119 | RISER DIAGRAMS III | - | - | - | - | - |
| E-001 | 120 | LEGEND & ABBREVIATIONS | - | - | - | - | - |
| E-101 | 121 | TOURIST INFORMATION CENTER LIGHTING PLAN | - | - | - | - | - |
| E-102 | 122 | TOURIST INFORMATION CENTER POWER & SYSTEMS PLAN | - | - | - | - | - |
| E-121 | 123 | MAINTENANCE BUILDING | - | - | - | - | - |
| E-131 | 124 | TRUCKER-VENDING BUILDING | - | - | - | - | - |
| E-501 | 125 | DETAILS I | - | - | - | - | - |
| E-502 | 126 | DETAILS II | - | - | - | - | - |
| E-601 | 127 | RISER DIAGRAMS I | - | - | - | - | - |
| E-602 | 128 | RISER DIAGRAMS II | - | - | - | - | - |
| E-603 | 129 | SCHEDULES I | - | - | - | - | - |
| E-604 | 130 | SCHEDULES II | - | - | - | - | - |

GARVER
4701 Northshore Drive
N Little Rock, AR 72118
501-376-3633
www.GarverUSA.com

CERTIFICATE OF AUTHORIZATION
GARVER LLC
No. 766
ARKANSAS ENGINEER

STATE OF ARKANSAS
LICENSED PROFESSIONAL ENGINEER
10432
JAS C. GRAHAM II
9/30/15

| Symbol | IFC | ISSUED FOR CONSTRUCTION Description | Date | Appr |
|---|---|---|---|---|
| | | | 10/1/15 | JRR |

Job Number 061451

Submitted by: John T. Watkins, III, PE, SE Director, Federal Services

Plot Scale: 1:2

Designed by: J. RAMSEY

Plot Date: 10/1/2015

Drawn by: S. BOWEN

Drwg Code: .

Checked by: G. ARCHER

File Name: AH15WR-G-002.DWG

ARKANSAS HIGHWAY AND TRANSPORTATION DEPARTMENT
ARKANSAS TOURIST INFORMATION CENTER
(WHITE RIVER) (S)
JOB 061451

SHEET INDEX

Sheet Reference Number:

G-002

Sheet 2 of 130

## BUILDING CODE INFORMATION

EVALUATED UNDER 2012 ARKANSAS FIRE PROTECTION CODE, BASED ON 2012 INTERNATIONAL BUILDING CODE

### TOURIST INFORMATION CENTER

**GENERAL:**

THIS PROJECT IS THE CONSTRUCTION OF A NEW TOURIST INFORMATION CENTER (RESTROOM FACILITY) AT LOCATIONS ALONG ARKANSAS INTERSTATE HIGHWAYS
PRIMARY USES WILL BE AS FOLLOWS:
MEN AND WOMEN RESTROOMS
VENDING AREA

**SPECIAL INSPECTIONS:**
NONE REQUIRED (CHAPTER 17; SECTION 1704.2, EXCEPTION 3)

**OCCUPANCY CLASSIFIED:**
U UTILITY (NON-SEPARATED) (CHAPTER 303)

**OCCUPANCY SEPARATION:**

NON-SEPARATED - PRIMARY OCCUPANCY TO BE GROUP U, UTILITY.

**TYPE OF CONSTRUCTION:**
Type IIB UNPROTECTED (TABLE 601)
NON-SPRINKLERED NOT REQUIRED PER CHAPTER 9; SECTION 903

**ALLOWABLE HEIGHT:** (CHAPTER 5, TABLE 503)
ACTUAL: 22'-0"
ALLOWED: 55'-0"

**ALLOWABLE STORIES:** (CHAPTER 5, TABLE 503)
ACTUAL: 1
ALLOWED: 2

**ALLOWABLE BUILDING AREAS:** (CHAPTER 5, TABLE 503)
ACTUAL: 3,995 GSF
ALLOWED: 8,500 GSF PER FLOOR/STORY

**AREA INCREASE:** (CHAPTER 5, SECTION 506.2)
FRONTAGE AREA
INCREASE NOT REQUIRED

SPRINKLER AREA
INCREASE NOT ALLOWED

**FIRE SEPARATION:** (CHAPTER 5, TABLE 508.4; CHAPTER 7)

NON-SEPARATED USE - NO FIRE SEPARATION REQUIRED

SHAFT ENCLOSURES - FIRE RESISTANCE RATING: (CHAPER 7, SECTION 713.4: LESS THAN 4 STORES: 1-HOUR FIRE RATING REQUIRED

TORNADO SHELTER AREA: NOT REQUIRED

MECHANICAL AREA: (CHAPTER 5, TABLE 509): NOT REQUIRED

**EGRESS REQUIREMENTS:** (CHAPTER 10; TABLE 1004.1.2)
OCCUPANT LOAD
GROUP U UTILITY 56 OCCUPANTS - (28 MEN: 28 WOMEN) BASED ON NUMBER OF FIXTURES AVAILABLE FOR

TOTAL OCCUPANT LOAD 56 OCCUPANTS

**MEANS OF EGRESS:**
EXITS (CHAPTER 10, SECTION 1015)
EXITS REQUIRED: 2
EXITS PROVIDED: 2

COMMON PATH OF TRAVEL (CHAPTER 10; SECTION 1014; TABLE 1014.3):
GROUP U, NON-SPRINKLERED
ACTUAL: 52'-0"
ALLOWED: 75'-0"

EXIT ACCESS TRAVEL DISTANCE (CHAPTER 10; SECTION 1016; TABLE 1016.2):
GROUP A-3, NON-SPRINKLERED - 300'
ACTUAL: 68'-0"
ALLOWED: 300'-0"

EXIT LOAD:
56 OCCUPANT/2 EXITS PROVIDED: 28 OCCUPANTS PER EXIT

EXIT STAIRWAYS (CHAPTER 10, SECTION 1005.3.1, SECTION 1009):
NOT REQUIRED

EXIT STAIRWAY FIRE RESISTANCE RATING (CHAPTER 10, SECTION 1005.3.1, SECTION 1009.3.1.2):
LESS THAN 4 STORIES: 1 HOUR FIRE RATING REQUIRED - N/A

EXIT CORRIDORS:
WIDTH (CHAPTER 10, SECTION 1005.3.2, SECTION 1018):
REQUIRED WIDTH: 28 OCCUPANTS x 0.2 CAPACITY FACTOR = 5.6"
PROVIDED WIDTH: 48" MIN.
MINIMUM CORRIDOR WIDTH (TABLE 1018.2): 44"
EXIT CORRIDOR FIRE RESISTANCE RATING (CHAPTER 7, SECTON 722.6; CHAPTER 10, SECTION 1018, TABLE 1018.1):
GROUP U, NON-SPRINKLERED AND OCCUPANT LOAD LESS THAN 30; NO RATING REQUIRED FOR WALLS AND CEILING.

EXIT DOORS:
WIDTH (CHAPTER 10, SECTION 1008):
REQUIRED WIDTH: 28 OCCUPANTS x 0.2 CAPACITY FACTOR = 5.6"
PROVIDE WIDTH: 2 PROVIDED 36" MIN. (OR 72")
MINIMUM CLEAR WIDTH (SECTION 1008.1.1) 32"

**FIRESTOPPING:**
NONE REQUIRED

## BUILDING CODE INFORMATION

EVALUATED UNDER 2012 ARKANSAS FIRE PROTECTION CODE, BASED ON 2012 INTERNATIONAL BUILDING CODE

### MAINTENANCE BUILDING

**GENERAL:**

THIS PROJECT IS THE CONSTRUCTION OF A NEW MAINTENANCE FACILITY AT LOCATIONS ALONG ARKANSAS INTERSTATE HIGHWAYS
PRIMARY USES WILL BE AS FOLLOWS:
MAINTENANCE EQUIPMENT STORAGE

**SPECIAL INSPECTIONS:**
NONE REQUIRED (CHAPTER 17; SECTION 1704.2, EXCEPTION 3)

**OCCUPANCY CLASSIFIED:**
U UTILITY (NON-SEPARATED) (CHAPTER 303)

**OCCUPANCY SEPARATION:**

NON-SEPARATED - PRIMARY OCCUPANCY TO BE GROUP U, UTILITY.

**TYPE OF CONSTRUCTION:**
Type IIB UNPROTECTED (TABLE 601)
NON-SPRINKLER NOT REQUIRED PER CHAPTER 9; SECTION 903

**ALLOWABLE HEIGHT:** (CHAPTER 5, TABLE 503)
ACTUAL: 15-0"
ALLOWED: 55'-0"

**ALLOWABLE STORIES:** (CHAPTER 5, TABLE 503)
ACTUAL: 1
ALLOWED: 2

**ALLOWABLE BUILDING AREAS:** (CHAPTER 5, TABLE 503)
ACTUAL: 800 GSF
ALLOWED: 8,500 GSF PER FLOOR/STORY

**AREA INCREASE:** (CHAPTER 5, SECTION 506.2)
FRONTAGE AREA
INCREASE NOT REQUIRED

SPRINKLER AREA
INCREASE NOT ALLOWED

**FIRE SEPARATION:** (CHAPTER 5, TABLE 508.4; CHAPTER 7)

NON-SEPARATED USE - NO FIRE SEPARATION REQUIRED

SHAFT ENCLOSURES - FIRE RESISTANCE RATING: (CHAPER 7, SECTION 713.4: LESS THAN 4 STORES: 1-HOUR FIRE RATING

TORNADO SHELTER AREA: NOT REQUIRED

MECHANICAL AREA: (CHAPTER 5, TABLE 509): NOT REQUIRED

**EGRESS REQUIREMENTS:** (CHAPTER 10; TABLE 1004.1.2)
OCCUPANT LOAD
GROUP U UTILITY 2 OCCUPANTS - (800/500 =1.6 - 2)

TOTAL OCCUPANT LOAD 2 OCCUPANTS

**MEANS OF EGRESS:**
EXITS (CHAPTER 10, SECTION 1015; TABLE 1015.1)
EXITS REQUIRED: 1
EXITS PROVIDED: 1

COMMON PATH OF TRAVEL (CHAPTER 10; SECTION 1014; TABLE 1014.3):
GROUP U, NON-SPRINKLERED
ACTUAL: 40'-0"
ALLOWED: 75'-0"

EXIT ACCESS TRAVEL DISTANCE (CHAPTER 10; SECTION 1016; TABLE 1016.2):
GROUP A-3, NON-SPRINKLERED - 300'
ACTUAL: 40'-0"
ALLOWED: 300'-0"

EXIT LOAD:
2 OCCUPANTS/1 EXITS PROVIDED: 2 OCCUPANTS PER EXIT

EXIT STAIRWAYS (CHAPTER 10, SECTION 1005.3.1, SECTION 1009):
NOT REQUIRED

EXIT STAIRWAY FIRE RESISTANCE RATING (CHAPTER 10, SECTION 1005.3.1, SECTION 1009.3.1.2):
LESS THAN 4 STORIES: 1 HOUR FIRE RATING REQUIRED - N/A

EXIT CORRIDORS:
WIDTH (CHAPTER 10, SECTION 1005.3.2, SECTION 1018):
REQUIRED WIDTH: OCCUPANTS x 0.2 CAPACITY FACTOR = 0.4"
PROVIDED WIDTH: N/A DIRECT EXIT TO EXTERIOR
MINIMUM CORRIDOR WIDTH (TABLE 1018.2): 44"
EXIT CORRIDOR FIRE RESISTANCE RATING (CHAPTER 7, SECTON 722.6; CHAPTER 10, SECTION 1018, TABLE 1018.1):
GROUP U, NON-SPRINKLERED AND OCCUPANT LOAD LESS THAN 30; NO RATING REQUIRED FOR WALLS AND CEILING.

EXIT DOORS:
WIDTH (CHAPTER 10, SECTION 1008):
REQUIRED WIDTH: 2 OCCUPANTS x 0.2 CAPACITY FACTOR = 0.4"

PROVIDE WIDTH: 1 PROVIDED 36" MIN.
MINIMUM CLEAR WIDTH (SECTION 1008.1.1) 32"

**FIRESTOPPING:**
NONE REQUIRED

## BUILDING CODE INFORMATION

EVALUATED UNDER 2012 ARKANSAS FIRE PROTECTION CODE, BASED ON 2012 INTERNATIONAL BUILDING CODE

### TRUCKER VENDING BUILDING

**GENERAL:**

THIS PROJECT IS THE CONSTRUCTION OF A NEW TRUCKER RESTROOM FACILITY AT LOCATIONS ALONG ARKANSAS INTERSTATE HIGHWAYS
PRIMARY USES WILL BE AS FOLLOWS:
MEN AND WOMEN RESTROOMS
VENDING AREA

**SPECIAL INSPECTIONS:**
NONE REQUIRED (CHAPTER 17; SECTION 1704.2, EXCEPTION 3)

**OCCUPANCY CLASSIFIED:**
U UTILITY (NON-SEPARATED) (CHAPTER 303)

**OCCUPANCY SEPARATION:**

NON-SEPARATED - PRIMARY OCCUPANCY TO BE GROUP U, UTILITY.

**TYPE OF CONSTRUCTION:**
Type IIB UNPROTECTED (TABLE 601)
NON-SPRINKLER NOT REQUIRED PER CHAPTER 9; SECTION 903

**ALLOWABLE HEIGHT:** (CHAPTER 5, TABLE 503)
ACTUAL: 15-0"
ALLOWED: 55'-0"

**ALLOWABLE STORIES:** (CHAPTER 5, TABLE 503)
ACTUAL: 1
ALLOWED: 2

**ALLOWABLE BUILDING AREAS:** (CHAPTER 5, TABLE 503)
ACTUAL: 812 GSF
ALLOWED: 8,500 GSF PER FLOOR/STORY

**AREA INCREASE:** (CHAPTER 5, SECTION 506.2)
FRONTAGE AREA
INCREASE NOT REQUIRED

SPRINKLER AREA
INCREASE NOT ALLOWED

**FIRE SEPARATION:** (CHAPTER 5, TABLE 508.4; CHAPTER 7)

NON-SEPARATED USE - NO FIRE SEPARATION REQUIRED

SHAFT ENCLOSURES - FIRE RESISTANCE RATING: (CHAPER 7, SECTION 713.4: LESS THAN 4 STORES: 1-HOUR FIRE RATING

TORNADO SHELTER AREA: NOT REQUIRED

MECHANICAL AREA: (CHAPTER 5, TABLE 509): NOT REQUIRED

**EGRESS REQUIREMENTS:** (CHAPTER 10; TABLE 1004.1.2)
OCCUPANT LOAD
GROUP U UTILITY 12 OCCUPANTS - (6 MEN; 6 WOMEN) BASED ON NUMBER OF FIXTURES AVAILABLE FOR

TOTAL OCCUPANT LOAD 12 OCCUPANTS

**MEANS OF EGRESS:**
EXITS (CHAPTER 10, SECTION 1015; TABLE 1015.1)
EXITS REQUIRED: 1
EXITS PROVIDED: 1 EACH FROM MEN AND WOMEN RESTROOM

COMMON PATH OF TRAVEL (CHAPTER 10; SECTION 1014; TABLE 1014.3):
GROUP U, NON-SPRINKLERED
ACTUAL: 40'-0"
ALLOWED: 75'-0"

EXIT ACCESS TRAVEL DISTANCE (CHAPTER 10; SECTION 1016; TABLE 1016.2):
GROUP A-3, NON-SPRINKLERED - 300'
ACTUAL: 40'-0"
ALLOWED: 300'-0"

EXIT LOAD:
12 OCCUPANT/2 EXITS PROVIDED: 6 OCCUPANTS PER EXIT

EXIT STAIRWAYS (CHAPTER 10, SECTION 1005.3.1, SECTION 1009):
NOT REQUIRED

EXIT STAIRWAY FIRE RESISTANCE RATING (CHAPTER 10, SECTION 1005.3.1, SECTION 1009.3.1.2):
LESS THAN 4 STORIES: 1 HOUR FIRE RATING REQUIRED - N/A

EXIT CORRIDORS:
WIDTH (CHAPTER 10, SECTION 1005.3.2, SECTION 1018):
REQUIRED WIDTH: 6 OCCUPANTS x 0.2 CAPACITY FACTOR = 1.2"
PROVIDED WIDTH: 48" MIN.
MINIMUM CORRIDOR WIDTH (TABLE 1018.2): 44"
EXIT CORRIDOR FIRE RESISTANCE RATING (CHAPTER 7, SECTON 722.6; CHAPTER 10, SECTION 1018, TABLE 1018.1):
GROUP U, NON-SPRINKLERED AND OCCUPANT LOAD LESS THAN 30; NO RATING REQUIRED FOR WALLS AND CEILING.

EXIT DOORS:
WIDTH (CHAPTER 10, SECTION 1008):
REQUIRED WIDTH: 6 OCCUPANTS x 0.2 CAPACITY FACTOR = 1.2"
2 PROVIDED - 1 EACH MEN &
PROVIDE WIDTH: WOMEN RESTROOM 36" MIN.
MINIMUM CLEAR WIDTH (SECTION 1008.1.1) 32"

**FIRESTOPPING:**
NONE REQUIRED


GARVER
4701 Northshore Drive
N Little Rock, AR 72118
501-376-3533
www.GarverUSA.com


CERTIFICATE OF AUTHORIZATION GARVER LLC No. 766 ARKANSAS ENGINEER

STATE OF ARKANSAS LICENSED PROFESSIONAL ENGINEER No. 10432 THOMAS C. GRAHAM II
9/30/15

| Symbol | Description | Date | Appr |
|---|---|---|---|
| IFC | ISSUED FOR CONSTRUCTION | 10/1/15 | JRR |

Submitted by: John T. Watkins, III, PE, SE, Director, Federal Services
Job Number: 00461
Designed by: J RAMSEY
Plot Date: 9/30/15
Plot Scale: 1:1
Drawn by: J DELMANE
Dwg Code: .
Checked by: G. ARCHER
File Name: AHTSWR-G-003.DWG

ARKANSAS HIGHWAY AND TRANSPORTATION DEPARTMENT
ARKANSAS TOURIST INFORMATION CENTER
(WHITE RIVER) (S)
JOB 061451

CODE ANALYSIS

Sheet Reference Number:
G-003

GENERAL NOTES:

1. GRADE LINE DENOTES FINISHED GRADE WHERE SHOWN ON PLANS.
2. ALL PIPE LINES, POWER, TELEPHONE, AND TELEGRAPH LINES TO BE MOVED OR LOWERED BY THE RESPECTIVE OWNERS AS PER AGREEMENT WITH SUCH OWNERS.
3. ANY EQUIPMENT OR APPURTENANCE THAT INTERFERES WITH THE PROPOSED CONSTRUCTION AND WHICH MAY BE THE PROPERTY OF UTILITY SERVICE ORGANIZATIONS SHALL BE MOVED BY THE OWNERS UNLESS OTHERWISE PROVIDED.
4. ALL LAND MONUMENTS LOCATED WITHIN THE CONSTRUCTION AREA SHALL BE PROTECTED IN ACCORDANCE WITH SECTION 107.12 OF THE STANDARD SPECIFICATIONS.
5. ALL TREES THAT DO NOT DIRECTLY INTERFERE WITH THE PROPOSED CONSTRUCTION SHALL BE SPARED AS DIRECTED BY THE ENGINEER. CARE AND DISCRETION SHALL BE USED TO INSURE THAT ALL TREES NOT TO BE REMOVED SHALL BE HARMED AS LITTLE AS POSSIBLE DURING THE CONSTRUCTION OPERATIONS.
6. THE EXISTING CONCRETE SIDEWALK TO BE REMOVED FROM THE REMAINING SIDEWALK SHALL BE SEPARATED BY SAWING ALONG A NEAT LINE. AFTER SAWING, THE SIDEWALK TO BE REMOVED SHALL BE CAREFULLY REMOVED IN A MANNER THAT WILL NOT DAMAGE THE SIDEWALK THAT IS TO REMAIN. ANY DAMAGE OF THE SIDEWALK THAT IS TO REMAIN IN PLACE SHALL BE REPAIRED AT THE CONTRACTOR'S EXPENSE.
7. ALL FLEXIBLE BASE AND ASPHALTIC PAVEMENTS REMOVED SHALL BE PAID FOR UNDER THE ITEM NO. 210 - UNCLASSIFIED EXCAVATION.
8. THE EXISTING ASPHALT PAVEMENT TO BE REMOVED FROM THE REMAINING PAVEMENT SHALL BE SEPARATED BY SAWING ALONG A NEAT LINE. AFTER SAWING, THE PAVEMENT TO BE REMOVED SHALL BE CAREFULLY REMOVED IN A MANNER THAT WILL NOT DAMAGE THE PAVEMENT THAT IS TO REMAIN. ANY DAMAGE OF THE ASPHALT PAVEMENT THAT IS TO REMAIN IN PLACE SHALL BE REPAIRED AT THE CONTRACTOR'S EXPENSE.

OWNER:

ARKANSAS STATE HIGHWAY AND TRANSPORTATION DEPARTMENT
P.O. BOX 2261
LITTLE ROCK, ARKANSAS 72203-2261

CONTACT: RAY GRUVER, SECTION HEAD
MAINTENANCE DIVISION, FACILITIES MANAGEMENT SECT.
PHONE: 501-569-2090
FAX: 501-569-2011

OPERATOR:
ARKANSAS STATE HIGHWAY AND TRANSPORTATION DEPARTMENT

DESIGN FIRM ARCHITECTURE AND ENGINEERING:
GARVER, LLC
4701 NORTHSHORE DRIVE
NORTH LITTLE ROCK, ARKANSAS 72218
PHONE: 501-376-3633
FAX: 501-372-8042

ARCHITECT: JOHN RAMSEY, R.A.

MECHANICAL ENGINEER: LEE SUGGS, P.E.

STRUCTURAL ENGINEER: DAVID CLEMENT, P.E.

ELECTRICAL ENGINEER: BRYAN MELTON, P.E.

CIVIL ENGINEER: THOMAS GRAHAM, P.E.

"I HEREBY CERTIFY THAT THESE PLANS AND SPECIFICATIONS HAVE BEEN PREPARED BY ME, OR UNDER MY SUPERVISION. I FURTHER CERTIFY THAT TO THE BEST OF MY KNOWLEDGE THESE PLANS AND SPECIFICATIONS ARE AS REQUIRED BY LAW AND IN COMPLIANCE WITH THE ARKANSAS FIRE PREVENTION CODE FOR THE STATE OF ARKANSAS."

THOMAS C. GRAHAM II, ENGINEER

JOHN RAMSEY, R.A.

GOVERNING SPECIFICATIONS
ARKANSAS STATE HIGHWAY COMMISSION STANDARD SPECIFICATIONS FOR HIGHWAY CONSTRUCTION, EDITION OF 2014, AND THE FOLLOWING SPECIAL PROVISIONS AND SUPPLEMENTAL SPECIFICATIONS:

ERRATA_____ERRATA FOR THE BOOK OF STANDARD SPECIFICATIONS

FHWA-1273_____REQUIRED CONTRACT PROVISIONS FEDERAL-AID CONSTRUCTION CONTRACTS
FHWA-1273_____SUPPLEMENT - EQUAL EMPLOYMENT OPPORTUNITY - NOTICE TO CONTRACTORS
FHWA-1273_____SUPPLEMENT - SPECIFIC EQUAL EMPLOYMENT OPPORTUNITY RESPONSIBILITIES (23 U.S.C. 140)
FHWA-1273_____SUPPLEMENT - EQUAL EMPLOYMENT OPPORTUNITY - GOALS AND TIMETABLES
FHWA-1273_____SUPPLEMENT - EQUAL EMPLOYMENT OPPORTUNITY - FEDERAL STANDARDS
FHWA-1273_____SUPPLEMENT - POSTERS AND NOTICES REQUIRED FOR FEDERAL-AID PROJECTS
FHWA-1273_____SUPPLEMENT - WAGE RATE DETERMINATION
FHWA-1273_____SUPPLEMENT - WAGE RATE DETERMINATION - BUILDING

100-3_____CONTRACTOR'S LICENSE
108-1_____LIQUIDATED DAMAGES
620-1_____MULCH COVER

JOB 061451____BIDDING REQUIREMENTS AND CONDITIONS
JOB 061451____BROADBAND INTERNET SERVICE FOR FIELD OFFICE
JOB 061451____BUILDERS RISK INSURANCE
JOB 061451____COMPETENCY OF BIDDERS
JOB 061451____DOCUMENTATION OF PAYMENTS MADE TO DISADVANTAGED BUSINESS ENTERPRISES
JOB 061451____MANDATORY ELECTRONIC CONTRACT
JOB 061451____MEASUREMENT AND PAYMENT
JOB 061451____PARTNERING REQUIREMENTS
JOB 061451____PROJECT MANUAL
JOB 061451____STANDARD SPECIFICATIONS APPLICABILITY
JOB 061451____STORM WATER POLLUTION PREVENTION PLAN
JOB 061451____UTILITY ADJUSTMENTS
JOB 061451____VALUE ENGINEERING

ARKANSAS TOURIST INFORMATION CENTER (WHITE RIVER) (S) JOB NO. 061451
THE CONTRACTOR SHALL PROVIDE ALL OF THE WATER AND SANITARY SEWER SERVICES NECESSARY TO PROVIDE UTILITY SERVICES TO THE TOURIST INFORMATION CENTERS (TICS) (EASTBOUND AND WESTBOUND) AND THE TRUCKER-VENDING BUILDINGS (EASTBOUND AND WESTBOUND). ELECTRICAL WORK SHALL INCLUDE ALL SITE LIGHTING AND BUILDING ELECTRICAL SERVICES FOR THE TICS, THE MAINTENANCE BUILDING, AND THE TRUCKER-VENDING BUILDINGS. THE CONTRACTOR IS RESPONSIBLE FOR THE DEMOLITION AND RE-ROUTING OF EXISTING UTILITIES THAT INTERFERE WITH THE CONSTRUCTION OF THE NEW TICS, MAINTENANCE BUILDING, AND TRUCKER-VENDING BUILDINGS.

GARVER
4701 Northshore Drive
N Little Rock, AR 72118
501-376-3633
www.GarverUSA.com

CERTIFICATE OF AUTHORIZATION GARVER LLC No. 766 ARKANSAS ENGINEER

STATE OF ARKANSAS LICENSED PROFESSIONAL ENGINEER No. 10432 THOMAS C. GRAHAM II
11/10/15

| Symbol | Description | Date | Appr |
|---|---|---|---|
| IFC | ISSUED FOR CONSTRUCTION | 10/1/15 | JRR |

Designed by: T. GRAHAM
Submitted by: John T. Williams III, P.E., SE, Director, Federal Services
Job Number: 060451
Drawn by: T. BARTON
Plot Date: 11/10/15
Plot Scale: 1:1
N/A
Checked by: G. ARCHER
Dwg Code: -
N/A
File Name: AH15WR-G-004.DWG
N/A

ARKANSAS HIGHWAY AND TRANSPORTATION DEPARTMENT
ARKANSAS TOURIST INFORMATION CENTER
(WHITE RIVER) (S)
JOB 061451

GOVERNING SPECIFICATIONS

Sheet Reference Number:
G-004

# SUMMARY OF QUANTITIES

**SUMMARY OF QUANTITIES**
AHTD Job No. 061451

| ITEM NUMBER | ITEM | QUANTITY | UNIT |
|---|---|---|---|
| 201 | CLEARING | 0.50 | ACRE |
| 201 | GRUBBING | 0.50 | ACRE |
| 201 | CLEARING AND GRUBBING TREES | 1 | EACH |
| 202 | REMOVAL AND DISPOSAL OF BUILDINGS | 8 | EACH |
| 202 | REMOVAL AND DISPOSAL OF CONCRETE WALKS | 1489 | SQYD |
| 202 | REMOVAL AND DISPOSAL OF CURB AND GUTTER | 72 | LF |
| 202 | REMOVAL AND DISPOSAL OF FENCE | 112 | LF |
| 202 | REMOVAL AND DISPOSAL OF LIGHT POLE | 2 | EACH |
| 202 | REMOVAL AND DISPOSAL OF PIPE | 338 | LF |
| 202 | REMOVAL AND DISPOSAL OF POLE AND FOUNDATION | 1 | EACH |
| 202 | REMOVAL AND DISPOSAL OF WALLS | 65 | LF |
| 202 | REMOVAL AND DISPOSAL OF WATER SPIGOT | 2 | EACH |
| 202 | REMOVAL AND RELOCATION OF LIGHT POLE | 2 | EACH |
| 202 | REMOVAL AND RELOCATION OF SIGN | 4 | EACH |
| 210 | UNCLASSIFIED EXCAVATION | 4250 | CUYD |
| 210 | COMPACTED EMBANKMENT | 4600 | CUYD |
| 601 | MOBILIZATION | 1.00 | L.S. |
| SP & 602 | FURNISHING FIELD OFFICE | 1 | EACH |
| 603 | MAINTENANCE OF TRAFFIC | 1.00 | L.S. |
| 604 | REMOVAL OF PERMANENT PAVEMENT MARKINGS | 211 | LF |
| 604 | REMOVAL OF PERMANENT PAVEMENT MARKINGS (WHEELCHAIR EMBLEMS) | 4 | EACH |
| 620 | SEEDING | 1.09 | ACRE |
| SS & 620 | MULCH COVER | 1.86 | ACRE |
| 620 | WATER | 165.9 | MGAL |
| 620 | LIME | 2 | TON |
| 621 | TEMPORARY SEEDING | 1.86 | ACRE |
| 621 | SILT FENCE | 1609 | LF |
| 621 | SEDIMENT REMOVAL AND DISPOSAL | 50 | CUYD |
| 624 | SOLID SODDING | 1332 | SQYD |
| 633 | CONCRETE WALKS | 1299 | SQYD |
| 633 | CONCRETE STEPS | 5 | SQYD |
| 633 | HAND RAILING | 14 | LF |
| 641 | WHEELCHAIR RAMPS (TYPE SPECIAL) | 48 | SQYD |
| 718 | REFLECTORIZED PAINT PAVEMENT MARKING WHITE (4") | 720 | LF |
| 718 | REFLECTORIZED PAINT PAVEMENT MARKING SYMBOLS (WHEELCHAIR) | 4 | EACH |
| SP | SITE UTILITIES | 1.00 | L.S. |
| SP | SITE FURNISHINGS | 1.00 | L.S. |
| SP | EXTERIOR ELECTRICAL DISTRIBUTION | 1.00 | L.S. |
| SP | EXTERIOR AREA LIGHTING | 1.00 | L.S. |
| SP | TOURIST INFORMATION CENTER FACILITY | 2.00 | L.S. |
| SP | MAINTENANCE BUILDING | 1.00 | L.S. |
| SP | TRUCKER-VENDING BUILDING | 2.00 | L.S. |

# FOR INFORMATION ONLY

**SITE UTILITIES**
AHTD Job No. 061451

| ITEM | ITEM | QUANTITY | UNIT |
|---|---|---|---|
| | 6" SDR 26 PVC SANITARY SEWER | 136 | LF |
| | 4" SDR 26 PVC SANITARY SEWER | 68 | LF |
| | SANITARY SEWER CLEANOUT | 4 | EACH |
| | TWO-WAY SANITARY SEWER CLEANOUT | 6 | EACH |
| | 4" WATER LINE | 1360 | LF |
| | 4" VALVE | 8 | EACH |
| | 4"X4" TEE | 4 | EACH |
| | 5"X4" TEE | 1 | EACH |
| | 4"-450 BEND | 18 | EACH |
| | 4"-900 BEND | 1 | EACH |
| | 4" TO 1" REDUCER | 2 | EACH |
| | 4"X1" TEE | 2 | EACH |
| | 1" VALVE | 4 | EACH |
| | 1" WATER LINE | 47 | LF |
| | 4" X 2" TEE | 1 | EACH |
| | 2" VALVE | 1 | EACH |
| | 2" WATER LINE | 10 | LF |
| | 4"X1 1/4" TEE | 8 | EACH |
| | 1 1/4" VALVE | 8 | EACH |
| | 1 1/4" WATER LINE | 93 | LF |
| | 4"X2 1/2" TEE | 4 | EACH |
| | 2 1/2" TO 2" REDUCER | 2 | EACH |
| | 2 1/2" VALVE | 6 | EACH |
| | 2 1/2" WATER LINE | 102 | LF |

# FOR INFORMATION ONLY

**REMOVAL AND DISPOSAL OF PIPE**
AHTD Job No. 061451

| ITEM | ITEM | QUANTITY | UNIT |
|---|---|---|---|
| | SANITARY SEWER LINE | 80 | LF |
| | WATER LINE | 258 | LF |

# EROSION CONTROL PLAN REVISION

| DATE | REVISION |
|---|---|
| | |

# REVISIONS

**REVISION**
AHTD Job No. 061451

| DATE | REVISION | SHEET NUMBER |
|---|---|---|
| | | |

# EROSION CONTROL

**EROSION CONTROL**

| STATION | STATION | LOCATION | PERMANENT EROSION CONTROL | | | | TEMPORARY EROSION CONTROL | | | | |
|---|---|---|---|---|---|---|---|---|---|---|---|
| | | | SEEDING | WATER | LIME | SOLID SODDING | TEMPORARY SEEDING | MULCH COVER | WATER | SILT FENCE (E-11) | *SEDIMENT REMOVAL & DISPOSAL |
| | | | ACRE | MGAL | TON | SQYD | ACRE | ACRE | MGAL | LF | CUYD |
| ENTIRE | PROJECT | ENTIRE SITE | 1.09 | 128.0 | 2.0 | 1332 | 1.86 | 1.86 | 37.9 | 1609 | 50 |
| *ENTIRE PROJECT TO BE USED IF AND WHERE DIRECTED BY THE ENGINEER. | | | | | | | | | | | |
| TOTALS: | | | 1.09 | 128.0 | 2.0 | 1332 | 1.86 | 1.86 | 37.9 | 1609 | 50 |

BASIS OF ESTIMATE:
LIME.....2 TONS / ACRE OF SEEDING.
WATER.....102 M.G. / ACRE OF SEEDING.
WATER.....20.4 M.G. / ACRE OF TEMPORARY SEEDING.
WATER.....12.6 GAL. / SQ. YD. OF SOLID SODDING.

NOTE: THE TEMPORARY EROSION CONTROL DEVICES SHOWN ABOVE AND ON THE PLANS SHALL BE INSTALLED IN SUCH A SEQUENCE AS TO DETER EROSION AND SEDIMENTATION ON U.S. WATERWAYS AS EXPLAINED BY THE NATIONAL POLLUTANT DISCHARGE ELIMINATION SYSTEM PERMIT.

*QUANTITIES ARE ESTIMATED.
SEE SECTION 104.03 OF THE STD. SPECS.


GARVER
4701 Northshore Drive
N Little Rock, AR 72118
501-376-3633
www.GarverUSA.com


CERTIFICATE OF AUTHORIZATION GARVER LLC No. 766 ARKANSAS ENGINEER

STATE OF ARKANSAS LICENSED PROFESSIONAL ENGINEER No. 10452 JAMES C. GRAHAM 9/30/15

| Symbol | Description | Date | Appr. |
|---|---|---|---|
| IFC | ISSUED FOR CONSTRUCTION | 10/1/15 | JRC |

Designed by: T. GRAHAM
Submitted by: John T. Watkins, III, PE, SE, Director, Federal Services
Job Number: 061451
Drawn by: T. BARTON
Plot Date: 10/13/15
Plot Scale: 1:1
Checked by: G. ARCHER
Dwg Code: .
File Name: AH15WR-G-005.DWG

ARKANSAS HIGHWAY AND TRANSPORTATION DEPARTMENT
ARKANSAS TOURIST INFORMATION CENTER
(WHITE RIVER) (S)
JOB 061451

SUMMARY OF QUANTITIES

Sheet Reference Number:
G-005

## GENERAL SITE NOTES:

1. CAUTION: UNDERGROUND UTILITIES LIE WITHIN AND ADJACENT TO THE LIMITS OF CONSTRUCTION. AN ATTEMPT HAS BEEN MADE TO LOCATE THESE UTILITIES ON THE PLANS, HOWEVER ALL EXISTING UTILITIES MAY NOT BE SHOWN AND THE ACTUAL LOCATIONS OF THE UTILITIES MAY VARY FROM LOCATIONS SHOWN. PRIOR TO BEGINNING ANY TYPE OF EXCAVATION, THE CONTRACTOR SHALL MARK THE VISIBLE UTILITIES & THE UTILITIES SHOWN ON THE PLANS IN THE FIELD. THE CONTRACTOR SHALL MAINTAIN THE UTILITY LOCATION MARKING UNTIL THEY ARE NO LONGER NECESSARY. USE EXTREME CAUTION WHEN EXCAVATING.
2. DIMENSIONS ARE GIVEN TO BACK OF CURB, CENTER OF STRIPE, FACE OF BUILDING, EDGE OF PAVEMENT, OR PROPERTY LINE.
3. COORDINATES GIVEN FOR RADII ARE FROM THE CENTER OF THE RADIUS.
4. THE CONTRACTOR IS RESPONSIBLE FOR THE APPROPRIATE BARRICADES AND SAFETY PRECAUTIONS IN ALL EXCAVATED AREAS. EXCAVATED AREAS SHALL BE ADEQUATELY FILLED OR COVERED BY THE CONTRACTOR BEFORE LEAVING THE JOB SITE EACH DAY.
5. THE CONTRACTOR IS RESPONSIBLE FOR DAMAGE TO EXISTING STRUCTURES, PAVEMENTS, AND UTILITIES.
6. THE CONTRACTOR SHALL MAINTAIN THE SITE IN AN ORDERLY AND CLEAN FASHION.
7. ALL WASTE MATERIALS GENERATED FROM CONSTRUCTION BECOME THE PROPERTY OF THE CONTRACTOR. THE CONTRACTOR SHALL REMOVE THE WASTE MATERIALS FROM THE SITE AND DISPOSE OF IN A LEGAL MANNER.
8. SEE ARCHITECTURAL PLANS FOR BUILDING ACCESS AND A/C CONDENSER DETAILS.
9. ALL REINFORCING STEEL SHALL BE GRADE A-60.
10. THE CONTRACTOR IS TO REMOVE OR RELOCATE, WHEN APPLICABLE, EASEMENTS, AND CONNECTING IMPROVEMENTS, DRAIN PIPES, POWER POLES AND GUY WIRES, WATER METERS AND WATER LINES, WELLS, SIGN POLES, UNDERGROUND GAS, SEPTIC TANKS, AND ASPHALT, SHOWN AND NOT SHOWN, WITHIN CONSTRUCTION LIMITS AND WHERE NEEDED, TO ALLOW FOR FILL MATERIAL, UNLESS OTHERWISE DENOTED, TO BE REMOVED AND AS "UNCLASSIFIED EXCAVATION".

## GENERAL UTILITY NOTES:

1. CAUTION: UNDERGROUND UTILITIES LIE WITHIN AND ADJACENT TO THE LIMITS OF CONSTRUCTION. AN ATTEMPT HAS BEEN MADE TO LOCATE THESE UTILITIES ON THE PLANS; HOWEVER, ALL EXISTING UTILITIES MAY NOT BE SHOWN AND THE ACTUAL LOCATIONS OF THE UTILITIES MAY VARY FROM LOCATIONS SHOWN. PRIOR TO BEGINNING ANY TYPE OF EXCAVATION, THE CONTRACTOR SHALL CONTACT THE UTILITIES INVOLVED AND MAKE ARRANGEMENTS FOR THE LOCATION OF THE UTILITIES ON THE GROUND. THE CONTRACTOR SHALL MAINTAIN THE UTILITY LOCATION MARKING UNTIL THEY ARE NO LONGER NECESSARY.
2. THE CONTRACTOR SHALL VERIFY HORIZONTAL AND VERTICAL LOCATION AND SIZE FOR ALL EXISTING STORM SEWER STRUCTURES, PIPES, AND ALL UTILITIES PRIOR TO CONSTRUCTION.
3. THE CONTRACTOR IS RESPONSIBLE FOR REPAIRS OF DAMAGE TO ANY EXISTING IMPROVEMENTS DURING CONSTRUCTION, SUCH AS, BUT NOT LIMITED TO, UTILITIES, PAVEMENT, STRIPING, CURBS, ETC. REPAIRS SHALL BE EQUAL TO OR BETTER THAN EXISTING CONDITIONS.
4. THE CONTRACTOR SHALL REFER TO ARCHITECTURAL PLANS AND SPECIFICATIONS FOR ACTUAL LOCATION OF ALL UTILITY ENTRANCES TO INCLUDE SANITARY SEWER LATERALS, DOMESTIC AND FIRE PROTECTION WATER SERVICE, ELECTRICAL, TELEPHONE, AND COMMUNICATIONS. CONTRACTOR SHALL COORDINATE INSTALLATION OF UTILITIES IN SUCH A MANNER AS TO AVOID CONFLICTS AND ASSURE PROPER DEPTHS ARE ACHIEVED AS WELL AS COORDINATING WITH LOCAL UTILITY REQUIREMENTS AS TO LOCATIONS AND SCHEDULING FOR TIE-INS/CONNECTIONS PRIOR TO CONNECTING EXISTING FACILITIES.
5. THE CONTRACTOR SHALL COMPLY TO THE FULLEST EXTENT WITH THE LATEST STANDARD OF OSHA DIRECTIVES OR ANY OTHER AGENCY HAVING JURISDICTION FOR EXCAVATION AND TRENCHING PROCEDURES. THE CONTRACTOR SHALL USE SUPPORT SYSTEMS, SLOPING, BENCHING, AND OTHER MEANS OF PROTECTION. THIS TO INCLUDE, BUT NOT LIMITED TO, ACCESS AND EGRESS FROM ALL EXCAVATION AND TRENCHING. CONTRACTOR IS RESPONSIBLE FOR COMPLIANCE WITH PERFORMANCE CRITERIA FOR OSHA.
6. THE MINIMUM HORIZONTAL SEPARATION BETWEEN THE CLOSEST TWO POINTS OF THE WATER AND SEWER LINE IS TEN (10) FEET, OR MINIMUM VERTICAL SEPARATION BETWEEN THE CLOSEST TWO POINTS OF THE WATER AND SEWER LINE IS EIGHTEEN (18) INCHES.
7. THE CONTRACTOR SHALL, ON ALL UTILITIES, COORDINATE INSPECTION WITH THE APPROPRIATE AUTHORITIES PRIOR TO COVERING TRENCHES AT INSTALLATION.
8. THE CONTRACTOR SHALL COORDINATE UTILITY INSTALLATIONS WITH LOCAL GOVERNING AUTHORITIES. PAYMENT OF ALL FEES REGARDING THE INSTALLATION OF UTILITIES (I.E. TAPPING FEES, PERMIT FEES, INSTALLATION FEES, METER FEES, ETC.) SHALL BE THE RESPONSIBILITY OF THE CONTRACTOR.

## WATER NOTES:

1. ALL WATERLINES (12-INCHES OR LESS) SHALL BE FABRICATED FROM PVC C-900, DR18.
2. ALL PVC WATER LINE MATERIAL SHALL BE BLUE.
3. ALL MECHANICAL JOINT BENDS USED ON WATER MAINS 4-INCHES AND LARGER, SHALL BE RESTRAINED USING RESTRAINED FITTINGS OR CONCRETE THRUST BLOCKS.
4. PROVIDE METALLIC TAPE ABOVE ALL WATER DISTRIBUTION LINE ROUTES. INCLUDE A #10 INSULATED COPPER LOCATOR WIRE ABOVE THE PIPE. WIRE SHALL BE BROUGHT TO GRADE AT VALVE BOXES AND HYDRANTS.
5. PROVIDE CHLORINATION AND INDEPENDENT TESTING OF WATER SAMPLES FOR NEWLY INSTALLED WATER MAINS AND SERVICE PIPING, IN ACCORDANCE WITH THE ARKANSAS DEPARTMENT OF HEALTH. SAMPLING AND TESTING SHALL BE PERFORMED BY A CERTIFIED LABORATORY QUALIFIED TO PERFORM WATER TESTING.
6. PROVIDE A MINIMUM COVER OF THIRTY (30) INCHES FROM FINISHED GRADE TO THE TOP OF THE PIPE UNLESS OTHERWISE SPECIFIED.
7. DIG THROUGH LOCATOR TAPE SHALL BE BURIED 2 FEET ABOVE LINE.
8. ALL IRON PIPE AND FITTINGS SHALL BE POLYWRAPPED.
9. BEDDING, BACKFILL, AND COMPACTION OVER WATER LINES SHALL BE IN ACCORDANCE WITH THE SPECIFICATIONS.
10. THE CONTRACTOR SHALL NOTIFY THE ENGINEER A MINIMUM OF 5 FULL BUSINESS DAYS PRIOR TO CLOSING A LANE/ROAD. IF THE CONTRACTOR FAILS TO GIVE THE PROPER NOTIFICATION, THE LANE/ROAD CLOSURE WILL NOT BE ALLOWED UNTIL 5 FULL BUSINESS DAYS AFTER THE NOTIFICATION WAS GIVEN.
11. THRUST BLOCKS SHALL BE PROVIDED AT ALL HORIZONTAL BENDS, TEES, AND FIRE HYDRANTS. SEE DETAILS.
12. REFERENCE ARCHITECTURAL PLANS FOR ALL SERVICE CONNECTION LOCATIONS.
13. ALL VERTICAL BENDS ON WATER MAIN SHALL BE RESTRAINED WITH A MECHANICAL JOINT FITTING SUPPLIED WITH THE RETAINER GLANDS. ANY JOINTS 25 FEET OR LESS FROM EITHER SIDE OF VERTICAL BEND SHALL BE RESTRAINED WITH A RETAINER GLAND.

## SANITARY SEWER NOTES:

1. ALL GRAVITY PIPING 4-INCHES TO 15-INCHES IN DIAMETER SHALL BE PVC, ASTM D3034, SDR 26 OR BETTER AND THE COLOR SHALL BE GREEN.
2. THE DEPTH OF COVER FOR FORCE MAINS, GRAVITY MAINS, AND LATERALS SHALL NOT BE LESS THAN 36-INCHES.
3. WASTEWATER GRAVITY OR FORCE MAINS SHALL MAINTAIN HORIZONTAL AND VERTICAL SEPARATION FROM WATER MAINS.
4. INSTALLATION OF PVC PIPE SHALL BE IN ACCORDANCE WITH ASTM 2321. WHERE PVC ENTERS A MANHOLE, A SUITABLE MANHOLE COUPLER OR FLEXIBLE MANHOLE CONNECTOR SHALL BE INSTALLED IN THE MANHOLE WALL TO PROVIDE A WATER TIGHT CONNECTION.
5. ALL MANHOLES SHALL BE 4-FEET DIAMETER POLYETHYLENE LINED PRE-CAST CONCRETE ACCORDING TO ASTM C478. MINIMUM WALL THICKNESS SHALL BE OF 5-INCHES. MINIMUM MANHOLE ACCESS OF 22-INCHES IS REQUIRED. MAXIMUM DISTANCE BETWEEN MANHOLES SHALL BE 400 FEET.
6. MANHOLE COVERS SHALL BE ABSOLUTELY LEVEL WITH THE PAVEMENT OR CONCRETE, AND 3-INCHES ABOVE THE FINAL FINISHED SURFACE IN GRASSY AREAS.
7. ALL MANHOLE RINGS AND COVERS SHALL BE CAST IRON, AND HAVE THE WORD "SANITARY SEWER" MARKED IN EACH COVER.
8. ALL SERVICE LATERALS SHALL BE AT LEAST 4-INCH DIAMETER, AND SHALL HAVE A SURFACE (FLUSH WITH THE GROUND) CLEANOUT MADE OF PVC BELL AND SPIGOT. THE CLEANOUT SHALL BE ENCASED WITH AN 18-INCH SQUARE OR ROUND BY 6-INCH THICK COLLAR.
9. ALL SERVICE LATERALS CONNECTING TO THE COLLECTION LINES SHALL HAVE GASKET "WYED" FITTINGS MADE OF PVC, WHICH WILL BE HELD IN PLACE WITH STAINLESS STEEL BANDS.
10. PROVIDE METALLIC TAPE ABOVE ALL SEWER LINE AND FORCE MAIN ROUTES. INCLUDE A #10 LOCATOR WIRE ALONG SIDE OF PIPE. WIRE SHALL BE BROUGHT TO GRADE AT VALVE BOXES.
11. REFERENCE ARCHITECTURAL PLANS FOR ALL BUILDING SERVICE CONNECTION LOCATIONS.
12. COORDINATES OR DIMENSIONS SHOWN ARE TO CENTERLINE OF PIPE OR TO CENTER OF MANHOLE.
13. CONTRACTOR SHALL BE RESPONSIBLE FOR PAYING ALL APPLICABLE FEES FOR SANITARY SEWER INSTALLATION INCLUDING, BUT NOT LIMITED TO, TAPPING FEES, ETC.

## GENERAL GRADING/DRAINAGE NOTES:

1. PAVEMENT MARKINGS SHALL COMPLY WITH THE STANDARDS SET FORTH IN THE LATEST EDITION OF THE "MANUAL ON UNIFORM TRAFFIC CONTROL DEVICES" BY THE U. S. DEPARTMENT OF TRANSPORTATION.
2. THE CONTRACTOR IS RESPONSIBLE FOR ADEQUATE EROSION CONTROL MEASURES. THESE MEASURES WILL SATISFY SECTION 109 OF THE STANDARD SPECIFICATIONS, SPECIAL PROVISIONS AND THE REQUIREMENTS OF THE ARKANSAS DEPARTMENT OF ENVIRONMENTAL QUALITY. EROSION CONTROL DEVICES WILL BE MAINTAINED UNTIL PERMANENT GROUND COVER IS ESTABLISHED. PERIMETER CONTROLS SHALL BE PLACED AS THE CLEARING AND GRUBBING OPERATIONS ARE STARTED.
3. SEED, FERTILIZE AND MULCH AREAS DISTURBED BY CONSTRUCTION (EXCEPT AREAS TO BE PAVED). COMPLY WITH THE STANDARDS SET FORTH IN THE STANDARD SPECIFICATIONS.
4. CONTRACTOR SHALL EMPLOY A QUALIFIED MATERIALS TESTING LABORATORY, ACCEPTABLE TO THE ENGINEER, TO PROVIDE TESTING SERVICES DURING CONSTRUCTION. TEST RESULTS SHALL BE PROMPTLY SENT TO THE OWNER/ENGINEER.
5. CONTRACTOR SHALL MAINTAIN BENCHMARKS ON SITE UNTIL THE END OF CONSTRUCTION.

## TELEPHONE AND COMMUNICATIONS NOTES:

1. REFERENCE ARCHITECTURAL DOCUMENTS FOR ALL BUILDING SERVICE CONNECTIONS.
2. ALL WORK SHALL BE COMPLETED TO AT&T SPECIFICATIONS AND STANDARDS.

## POWER NOTES:

1. REFERENCE ARCHITECTURAL DOCUMENTS FOR ALL BUILDING SERVICE CONNECTIONS.
2. ALL WORK SHALL BE COMPLETED TO ENTERGY SPECIFICATIONS AND STANDARDS.

## SITE SYMBOL LEGEND

| UTILITY OR FEATURE | EXISTING | PROPOSED | UTILITY OR FEATURE | EXISTING | PROPOSED |
|---|---|---|---|---|---|
| UTILITY POLE | | | POTABLE WATER | | WTR |
| WATER VALVE | | | SANITARY SEWER | SS | SS |
| SAN. SEWER MANHOLE | | | SANITARY FORCED MAIN | FM | FM |
| TRANSFORMER | | | SITE GAS | G | G |
| WATER METER | | | OH ELECTRIC SERVICE | OHE | OHE |
| GAS METER | | | U/G ELECTRIC SERVICE | E | UGE |
| FIRE HYDRANT | | | EASEMENT | | |
| DROP INLET | | | U/G TELEVISION CABLE | UGTV | UGTV |
| TREE | | | U/G TELEPHONE | UGT | UGT |
| TREE TO BE REMOVED OR TRANSPLANTED | | | U/G FIBER OPTIC CABLE | UGFO | UGFO |
| STORM SEWER | | | PROPERTY LINE | PL | PL |
| SIGN | | | RIGHT-OF-WAY | ROW | ROW |
| TELEPHONE PEDESTAL | | | ROADWAY CENTER LINE | | |
| | | | BUILDING SET BACK | BSL | BSL |
| | | | FIRE LINE | | |
| | | | EROSION CONTROL | | |
| | | | SILT FENCE | | |
| | | | PROJECT BOUNDRY | | |
| | | | INDEX CONTOURS | | |
| | | | INTERMEDIATE CONTOURS | | |
| | | | GUY WIRE | | |
| | | | CURB AND GUTTER | | |
| | | | TRAFFIC FLOW ARROW | | |
| | | | CONCRETE | | |
| | | | FLARED END SECTION | | |
| | | | RIP RAP | | |
| | | | ASPHALT PAVING | | |
| | | | COMPACTED CLASS 7 AGG. BASE | | |


GARVER
4701 Northshore Drive
N Little Rock, AR 72116
501-376-3633
www.GarverUSA.com


CERTIFICATE OF AUTHORIZATION GARVER LLC No. 766 ARKANSAS ENGINEER

STATE OF ARKANSAS LICENSED PROFESSIONAL ENGINEER No. 10432 THOMAS C. GRAHAM II

9/30/15

| Symbol | Description | Date | Appr. |
|---|---|---|---|
| IFC | ISSUED FOR CONSTRUCTION | 10/1/15 | JRR |

Designed by: T. GRAHAM
Submitted by: John T. Williams, III, PE, SE, Director, Federal Services
Job Number: 061451
Drawn by: T. BARTON
Plot Date: 9/30/15
Plot Scale: 1:1
Checked by: G. ARCHER
Drwg Code: -
N/A
File Name: AHTSWR C-001.DWG

ARKANSAS HIGHWAY AND TRANSPORTATION DEPARTMENT
ARKANSAS TOURIST INFORMATION CENTER
(WHITE RIVER) (S)
JOB 061451

GENERAL NOTES AND LEGEND

Sheet Reference Number:
C-001

## CONTROL POINT DATA

SURVEY CONTROL COORDINATES
Project Name: 061451 (CONTROL IS ORIGINALLY FROM JOB# 061316)
Date: 8/31/2015
Coordinate System: Arkansas State Plane Coordinates
Based on AHTD GPS PT *590013, 590013A, 590014*
Projected to Ground Coordinates
Units: U.S. Survey Foot

***COORDINATES LISTED BELOW ARE GROUND (Localized) COORDINATES !!!!***

| Point No. | Northing | SY | Easting | SX | Elevation | SZ | Feature Code | Point Description |
|---|---|---|---|---|---|---|---|---|
| 1 | 2102494.586 | 0.0220 | 1472128.595 | 0.0150 | 204.12 | 0.004 | CTL | PD:5/8"REBAR W/2"CAP |
| 2 | 2101954.9076 | 0.0080 | 1472074.1716 | 0.0060 | 201.37 | 0.005 | CTL | PD:5/8"REBAR W/2"CAP |
| 3 | 2102116.2847 | 0.0070 | 1472675.6751 | 0.0080 | 177.80 | 0.007 | CTL | PD:5/8"REBAR W/2"CAP |
| 4 | 2102708.5244 | 0.0110 | 1473407.9976 | 0.0090 | 176.89 | 0.007 | CTL | PD:5/8"REBAR W/2"CAP |
| 8 | 2102969.9446 | 0.0131 | 1472117.3961 | 0.0121 | 198.56 | 0.004 | CTL | PD:5/8"REBAR W/2"CAP |
| 9 | 2102998.9968 | 0.0179 | 1472546.5744 | 0.0143 | 176.18 | 0.007 | CTL | PD:5/8"REBAR W/2"CAP |
| 10 | 2103081.4469 | 0.0213 | 1473005.5326 | 0.0148 | 175.20 | 0.007 | CTL | PD:5/8"REBAR W/2"CAP |
| 100 | 2101994.4584 | 0.0001 | 1470426.4873 | 0.0001 | 192.09 | 0.000 | GPS | PD:AHTD GPS 590013 |
| 101 | 2102852.1180 | 0.0001 | 1471493.4509 | 0.0001 | 201.85 | 0.000 | GPS | PD:AHTD GPS 590013A |
| 900 | 2102626.6058 | 30.0000 | 1472477.9030 | 30.0000 | 199.79 | 0.006 | TBM | PD:CHISELED SQUARE SOUTHEAST CORNER OF BRIDGE |

**Control Coordinates End- Control Datum, Metadata, & Notes Begin**

*Standard Primary Control Monument - Rebar and Cap - Standard - 5/8"x 24" Rebar with 2"Aluminum Cap stamped: "(include all common information here)" plus other markings indicated in the point description of the individual point. AHTD monuments will be stamped "Arkansas Hwy & Trans Dept" with "PN: ###" & "Job ######". Monuments that are set by Consultants will be stamped "Arkansas Hwy & Trans Dept" with "PN:###", "Job######", & "PS####". The consultant Professional Surveyor in charge will stamp his/her PS license number on the cap.

**Standard GPS Control Point Monument - 5/8" x 48" Rebar with 2.5"Aluminum Cap stamped: "(include all common information here)" plus other markings indicated in the point description of the individual point. These monuments will be stamped "Ark. State Hwy Trans. Dept.", "GPS Survey", & "Point No. ######".

SX, SY, SZ – Represents the standard error estimate of the coordinate values of each point at the 67% confidence level (one sigma) based on the least squares analysis of the control network. See the AASHTO SDMS Technical Data Guide data tag definition for SX:, SY:, and SZ: for additional information. These values shall be used when control points are added and the entire network is reprocessed using least square analysis. A value of 0.001 is defined as fixed (no adjustment) in the least square analysis process. A value of 30 is defined as location by handheld GPS device or scaled from USGS Quadmap.

Reference Control points (1500 series) shall be used to re-establish horizontal datum if the primary control has been destroyed. These reference control points shall not be used for vertical control unless the elevation has been established from the project datum with 3-wire level techiniques.

All additional project control shall be occupied, measured, and adjusted with direct survey ties to at least two of the control points listed in the table above. New survey control shall not be independent of the survey control listed above. This includes horizontal coordinates and elevations.

Positional Accuracy:
Horizontal - GPS (1.0 cm± 1PPM) *100 & 101*
Horizontal - Primary (2.0cm± 20PPM): *PN: 1-4, 8-10*
Horizontal - Secondary (3 cm ± 50PPM): *PN:N/A*
Vertical - NGS 1st Order (±4mm x Vdist in km) *PN:N/A*
Vertical - NGS 2nd Order (±6mm x Vdist in km) *PN:N/A*
Vertical - NGS 3rd Order (±8mm x Vdist in km) *PN:900*

Horizontal Datum: NAD 1983 (1997) State Plane Zone: 0302 - North Zone
*The adjustment year is based on metadata in the SDMS Control file*
A project CAF of: 1.0000144480 has been used to compute the above coordinates.
*The project CAF shall have a minimum precision of 9 digits right of the decimal.*
***Note: This project CAF is the same as Job 061316***
This CAF is intended for use within the project limits only.
Grid Distance = Ground Distance X CAF
If Coordinates are listed as Ground:
To compute Grid Coordinates, multiply the Ground Coordinates by CAF about the origin of X=0 & Y=0
If Coordinates are listed as Grid:
To compute Ground Coordinates, divide the Grid Coordinates by CAF about the origin of X=0 & Y=0

Vertical Datum: NAVD 1988 based NGS BM:
A project Elevation Factor of: 0.9999908934 has been computed and incorporated in the above CAF.
This is based on the average elevation of the projec 190.38 Feet
3-Wire Leveling techniques have been used to establish elevations on
Points: 1-4, 8-10, 100-101 From NGS BM J 13 78, S 109, D 31

Basis of Bearing: Grid Bearings based on AHTD GPS points: *590013, 590013A, 590014*
Convergence Angle is: 0-17-53.02 RIGHT at PN: 1
LT: N 34-50-13.1 LG: W 091-28-02.82
Grid Azimuth = Astronomical Azimuth - Convergence Angle

***Control Datum, Metadata, & Notes End***

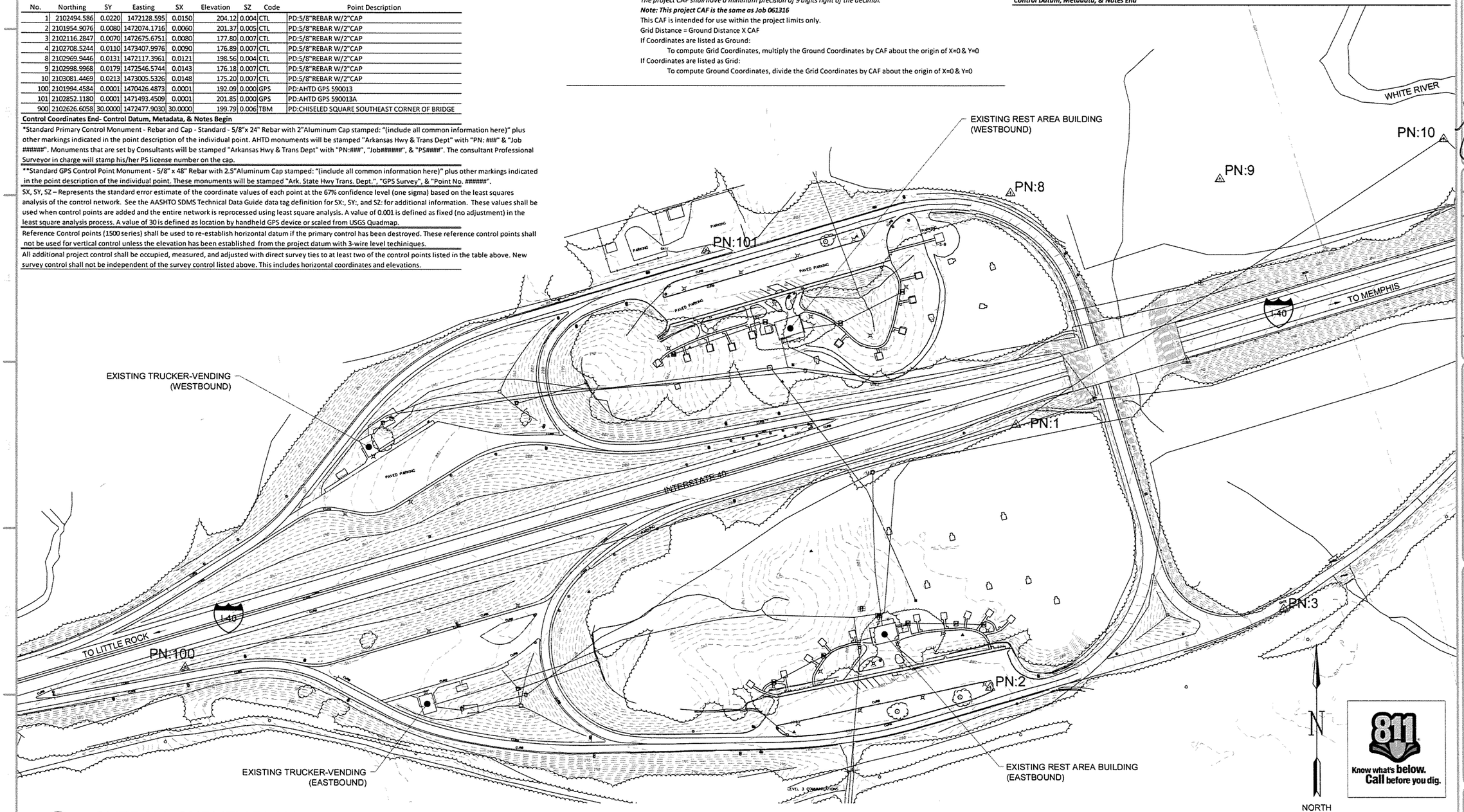


1 / C-002 OVERALL SURVEY PLAN
SCALE: 1" = 100'


GARVER
4701 Northshore Drive
N Little Rock, AR 72116
501-376-3633
www.GarverUSA.com


CERTIFICATE OF AUTHORIZATION GARVER LLC No. 766 ARKANSAS ENGINEER

STATE OF ARKANSAS LICENSED PROFESSIONAL ENGINEER No. 10432 THOMAS C. GRAHAM II 9/30/15

| Symbol | Description | Date | By |
|---|---|---|---|
| IFC | ISSUED FOR CONSTRUCTION | 10/1/15 | JRR |

Designed by: T. GRAHAM
Drawn by: T. BARTON
Checked by: G. ARCHER
Submitted by: John T. Walters, III, PE, SE, Director, Federal Services
Plot Date: 9/30/15
Plot Scale: 1:1
Drwg Code: .
Job Number: 061451
File Name: AHTSWR C-002.DWG

ARKANSAS HIGHWAY AND TRANSPORTATION DEPARTMENT
ARKANSAS TOURIST INFORMATION CENTER
(WHITE RIVER) (S)
JOB 061451

OVERALL SURVEY PLAN

Sheet Reference Number: C-002

Sheet 7 of 130

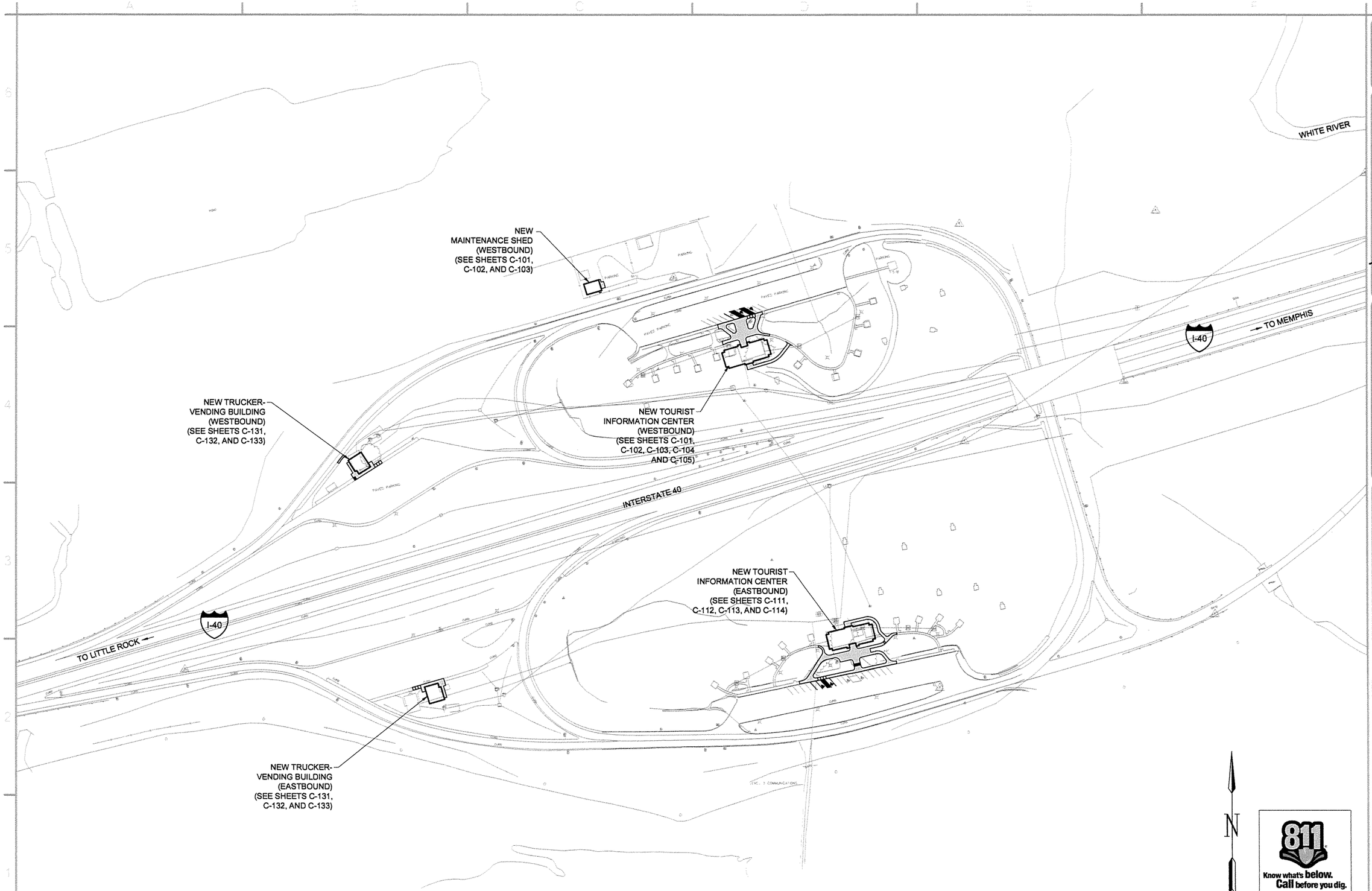


1 / C-003 OVERALL SITE PLAN

SCALE: 1" = 100'

GARVER
4701 Northshore Drive
N Little Rock, AR 72118
501-376-3633
www.GarverUSA.com

CERTIFICATE OF AUTHORIZATION ARKANSAS ENGINEER GARVER LLC No. 766

STATE OF ARKANSAS LICENSED PROFESSIONAL ENGINEER No. 10432 THOMAS C. GRAHAM II 9/30/15

| Symbol | Description | Date | Appr. |
|---|---|---|---|
| IFC | ISSUED FOR CONSTRUCTION | 10/1/15 | JRR |

Job Number 000451

Submitted by: John T. Williams, III, PE, SE Director, Federal Services

Plot Date: 9/30/15 | Plot Scale: 1:1

Designed by: T. GRAHAM | Drawn by: T. BARTON | Checked by: G. ARCHER | Dwg Code: . | File Name: AHTSWR-C-003.DWG

ARKANSAS HIGHWAY AND TRANSPORTATION DEPARTMENT
ARKANSAS TOURIST INFORMATION CENTER
(WHITE RIVER) (S)
JOB 081451

OVERALL SITE PLAN

Sheet Reference Number: C-003

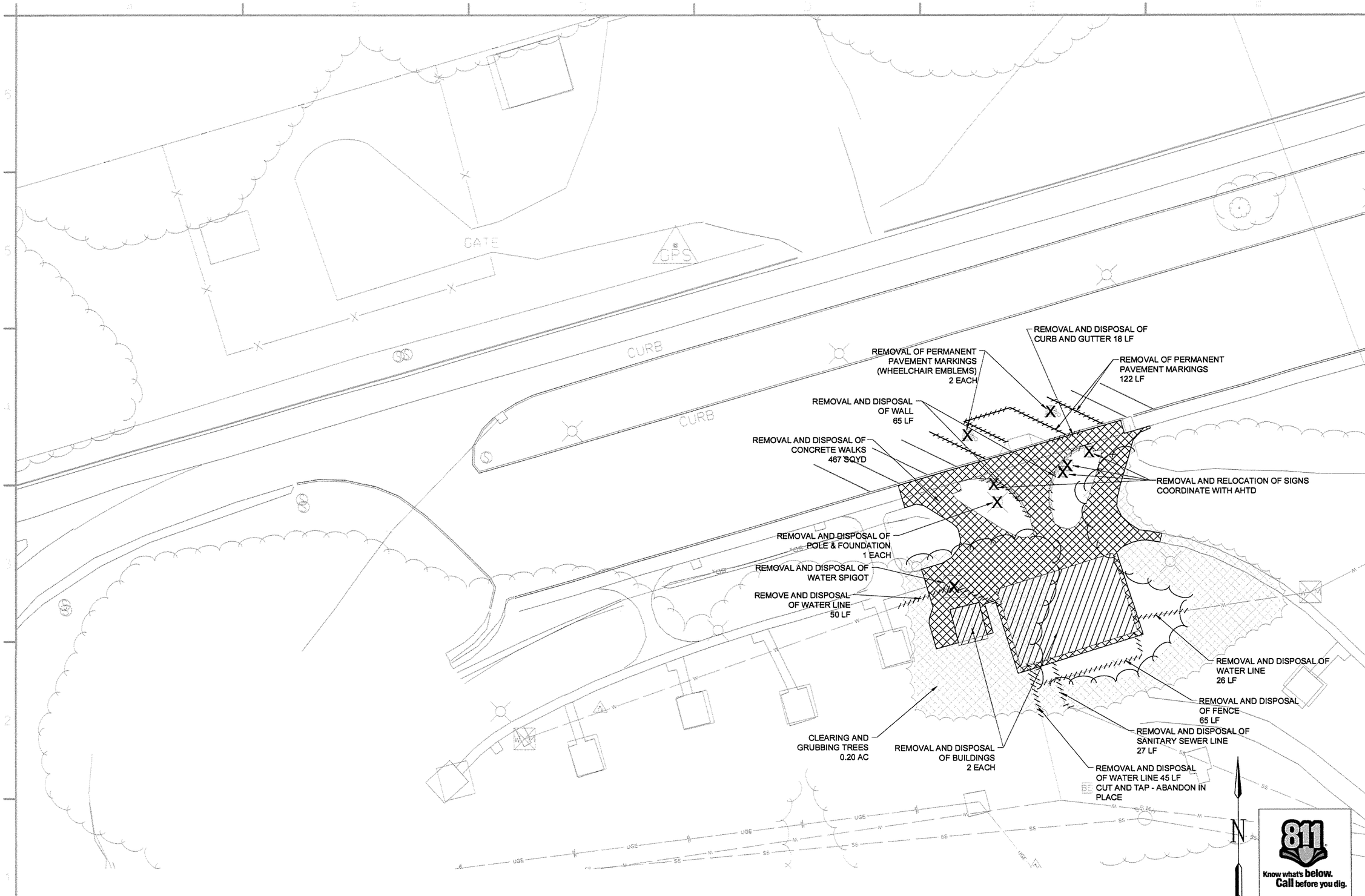


1
C-101

# TOURIST INFORMATION CENTER DEMOLITION PLAN (WESTBOUND)

SCALE: 1" = 20'

811 Know what's below. Call before you dig.

GARVER
4701 Northshore Drive
N Little Rock, AR 72118
501-376-3533
www.GarverUSA.com

CERTIFICATE OF AUTHORIZATION GARVER LLC No. 766 ARKANSAS ENGINEER

STATE OF ARKANSAS LICENSED PROFESSIONAL ENGINEER No. 10432 THOMAS C. GRAHAM II
9/30/15

| Symbol | Description | Date | Appr. |
|---|---|---|---|
| IFC | ISSUED FOR CONSTRUCTION | 10/1/15 | JRR |

Job Number: 060451
Submitted by: John T. Walters III, PE, SE, Director, Federal Services
Designed by: T. GRAHAM
Drawn by: T. BARTON
Plot Date: 9/30/15
Plot Scale: 1:1
Checked by: G. ARCHER
Dwg Code: .
File Name: AHTSWR-C-101.DWG

ARKANSAS HIGHWAY AND TRANSPORTATION DEPARTMENT
ARKANSAS TOURIST INFORMATION CENTER
(WHITE RIVER) (S)
JOB 061451

TOURIST INFORMATION CENTER AND MAINTENANCE BUILDING DEMOLITION PLAN (WESTBOUND)

Sheet Reference Number:
C-101

| MAINTENANCE BUILDING NODE LIST (WESTBOUND) | | | |
|---|---|---|---|
| POINT NUMBER | NORTHING | EASTING | DESCRIPTION |
| 100 | 2102835.74 | 1471298.88 | BLDG. COR. |
| 101 | 2102845.36 | 1471330.79 | BLDG. COR. |
| 102 | 2102846.51 | 1471334.62 | EDGE OF CONC. |
| 103 | 2102840.45 | 1471336.45 | EDGE OF CONC. |
| 104 | 2102841.99 | 1471341.56 | EDGE OF CONC. |
| 105 | 2102828.58 | 1471345.60 | EDGE OF CONC. |

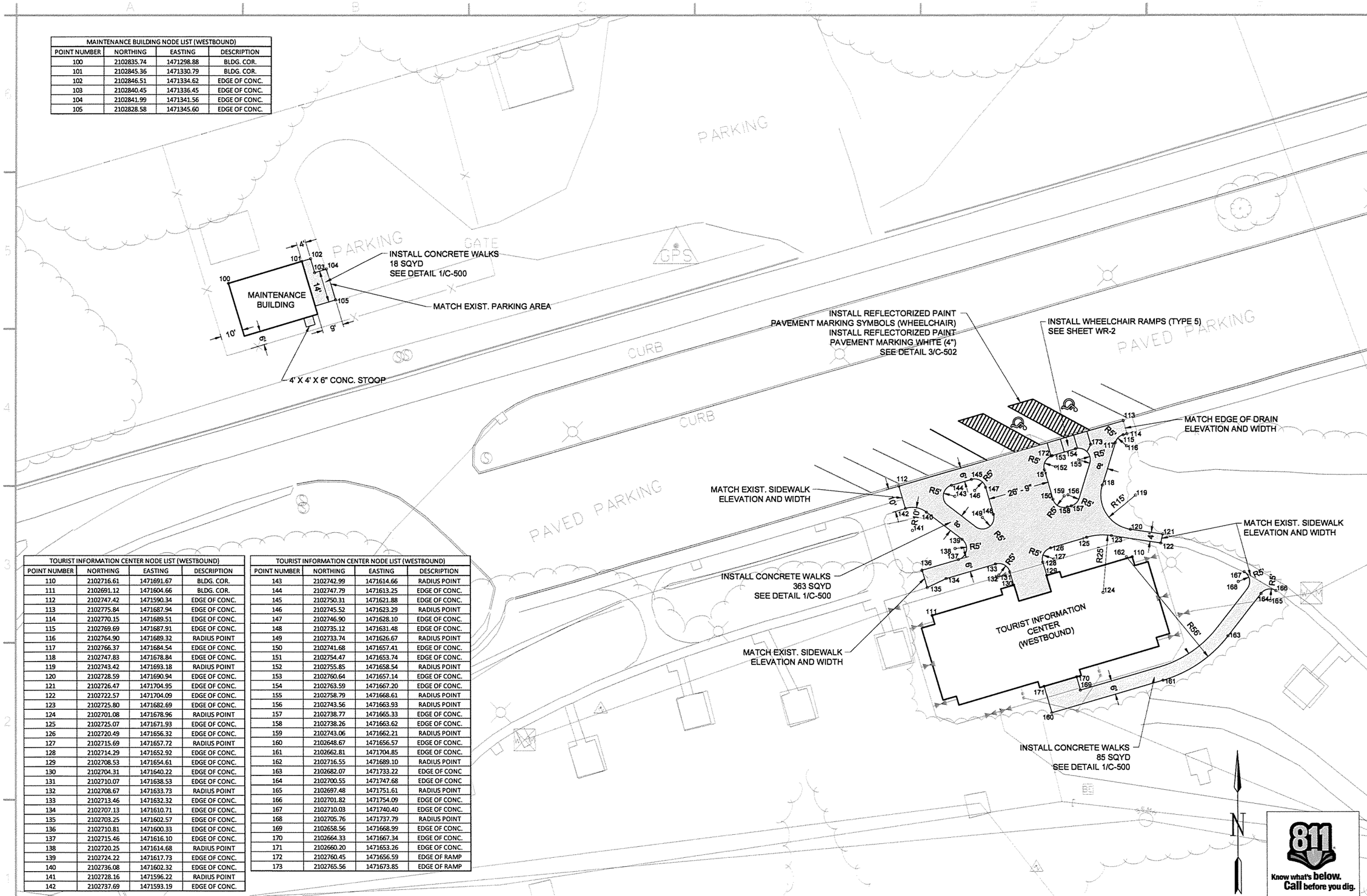


| TOURIST INFORMATION CENTER NODE LIST (WESTBOUND) | | | |
|---|---|---|---|
| POINT NUMBER | NORTHING | EASTING | DESCRIPTION |
| 110 | 2102716.61 | 1471691.67 | BLDG. COR. |
| 111 | 2102691.12 | 1471604.66 | BLDG. COR. |
| 112 | 2102747.42 | 1471590.34 | EDGE OF CONC. |
| 113 | 2102775.84 | 1471687.94 | EDGE OF CONC. |
| 114 | 2102770.15 | 1471689.51 | EDGE OF CONC. |
| 115 | 2102769.69 | 1471687.91 | EDGE OF CONC. |
| 116 | 2102764.90 | 1471689.32 | RADIUS POINT |
| 117 | 2102766.37 | 1471684.54 | EDGE OF CONC. |
| 118 | 2102747.83 | 1471678.84 | EDGE OF CONC. |
| 119 | 2102743.42 | 1471693.18 | RADIUS POINT |
| 120 | 2102728.59 | 1471690.94 | EDGE OF CONC. |
| 121 | 2102726.47 | 1471704.95 | EDGE OF CONC. |
| 122 | 2102722.57 | 1471704.09 | EDGE OF CONC. |
| 123 | 2102725.80 | 1471682.69 | EDGE OF CONC. |
| 124 | 2102701.08 | 1471678.96 | RADIUS POINT |
| 125 | 2102725.07 | 1471671.93 | EDGE OF CONC. |
| 126 | 2102720.49 | 1471656.32 | EDGE OF CONC. |
| 127 | 2102715.69 | 1471657.72 | RADIUS POINT |
| 128 | 2102714.29 | 1471652.92 | EDGE OF CONC. |
| 129 | 2102708.53 | 1471654.61 | EDGE OF CONC. |
| 130 | 2102704.31 | 1471640.22 | EDGE OF CONC. |
| 131 | 2102710.07 | 1471638.53 | EDGE OF CONC. |
| 132 | 2102708.67 | 1471633.73 | RADIUS POINT |
| 133 | 2102713.46 | 1471632.32 | EDGE OF CONC. |
| 134 | 2102707.13 | 1471610.71 | EDGE OF CONC. |
| 135 | 2102703.25 | 1471602.57 | EDGE OF CONC. |
| 136 | 2102710.81 | 1471600.33 | EDGE OF CONC. |
| 137 | 2102715.46 | 1471616.10 | EDGE OF CONC. |
| 138 | 2102720.25 | 1471614.68 | RADIUS POINT |
| 139 | 2102724.22 | 1471617.73 | EDGE OF CONC. |
| 140 | 2102736.08 | 1471602.32 | EDGE OF CONC. |
| 141 | 2102728.16 | 1471596.22 | RADIUS POINT |
| 142 | 2102737.69 | 1471593.19 | EDGE OF CONC. |

| TOURIST INFORMATION CENTER NODE LIST (WESTBOUND) | | | |
|---|---|---|---|
| POINT NUMBER | NORTHING | EASTING | DESCRIPTION |
| 143 | 2102742.99 | 1471614.66 | RADIUS POINT |
| 144 | 2102747.79 | 1471613.25 | EDGE OF CONC. |
| 145 | 2102750.31 | 1471621.88 | EDGE OF CONC. |
| 146 | 2102745.52 | 1471623.29 | RADIUS POINT |
| 147 | 2102746.90 | 1471628.10 | EDGE OF CONC. |
| 148 | 2102735.12 | 1471631.48 | EDGE OF CONC. |
| 149 | 2102733.74 | 1471626.67 | RADIUS POINT |
| 150 | 2102741.68 | 1471657.41 | EDGE OF CONC. |
| 151 | 2102754.47 | 1471653.74 | EDGE OF CONC. |
| 152 | 2102755.85 | 1471658.54 | RADIUS POINT |
| 153 | 2102760.64 | 1471657.14 | EDGE OF CONC. |
| 154 | 2102763.59 | 1471667.20 | EDGE OF CONC. |
| 155 | 2102758.79 | 1471668.61 | RADIUS POINT |
| 156 | 2102743.56 | 1471663.93 | RADIUS POINT |
| 157 | 2102738.77 | 1471665.33 | EDGE OF CONC. |
| 158 | 2102738.26 | 1471663.62 | EDGE OF CONC. |
| 159 | 2102743.06 | 1471662.21 | RADIUS POINT |
| 160 | 2102648.67 | 1471656.57 | EDGE OF CONC. |
| 161 | 2102662.81 | 1471704.85 | EDGE OF CONC. |
| 162 | 2102716.55 | 1471689.10 | RADIUS POINT |
| 163 | 2102682.07 | 1471733.22 | EDGE OF CONC |
| 164 | 2102700.55 | 1471747.68 | EDGE OF CONC |
| 165 | 2102697.48 | 1471751.61 | RADIUS POINT |
| 166 | 2102701.82 | 1471754.09 | EDGE OF CONC. |
| 167 | 2102710.03 | 1471740.40 | EDGE OF CONC. |
| 168 | 2102705.76 | 1471737.79 | RADIUS POINT |
| 169 | 2102658.56 | 1471668.99 | EDGE OF CONC. |
| 170 | 2102664.33 | 1471667.34 | EDGE OF CONC. |
| 171 | 2102660.20 | 1471653.26 | EDGE OF CONC. |
| 172 | 2102760.45 | 1471656.59 | EDGE OF RAMP |
| 173 | 2102765.56 | 1471673.85 | EDGE OF RAMP |

1
C-102

## SITE PLAN (WESTBOUND)

SCALE: 1" = 20'


GARVER
4701 Northshore Drive
N Little Rock, AR 72118
501-376-3633
www.GarverUSA.com


CERTIFICATE OF AUTHORIZATION
GARVER LLC
No. 766
ARKANSAS ENGINEER

STATE OF ARKANSAS
LICENSED PROFESSIONAL ENGINEER
No. 10432
THOMAS C. GRAHAM, III
9/30/15

| Symbol | Description | Date | Appr. |
|---|---|---|---|
| IFC | ISSUED FOR CONSTRUCTION | 10/1/15 | JRR |

Job Number: 060451
Submitted by: John T. Watters, III, PE, SE, Director, Federal Services
N/A
Designed by: T. GRAHAM
Plot Date: 9/30/15
Plot Scale: 1:1
Drawn by: T. BARTON
Dwg Code: .
Checked by: G. ARCHER
File Name: AHTSWR-C-102.DWG

ARKANSAS HIGHWAY AND TRANSPORTATION DEPARTMENT
ARKANSAS TOURIST INFORMATION CENTER
(WHITE RIVER) (S)
JOB 061451

TOURIST INFORMATION CENTER
AND MAINTENANCE BUILDING
SITE PLAN (WESTBOUND)

Sheet Reference Number:
C-102

Sheet 10 of 130

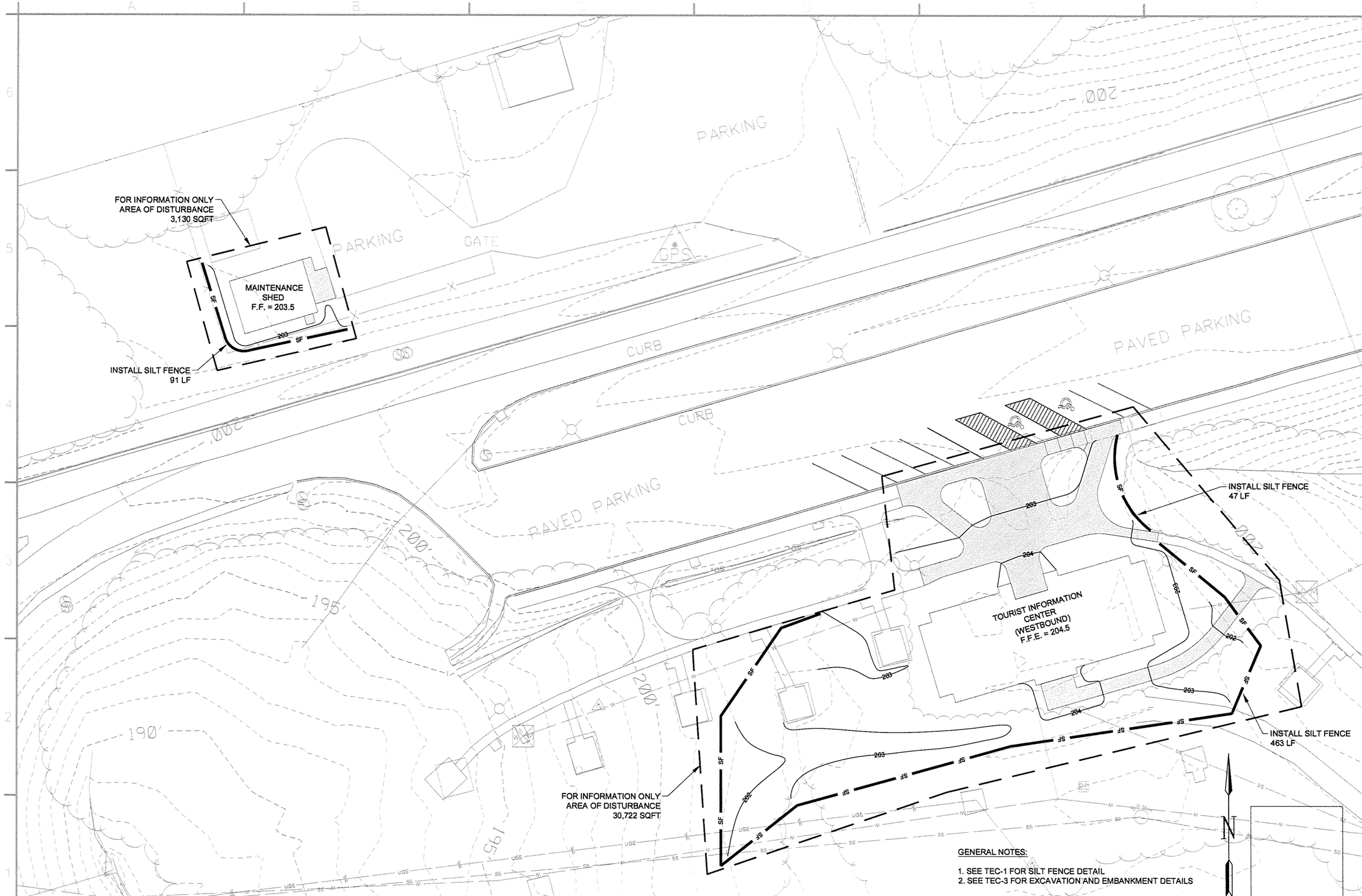


GENERAL NOTES:

1. SEE TEC-1 FOR SILT FENCE DETAIL
2. SEE TEC-3 FOR EXCAVATION AND EMBANKMENT DETAILS

1
C-103

## GRADING AND EROSION CONTROL PLAN (WESTBOUND)

SCALE: 1" = 20'

GARVER
4701 Northshore Drive
N Little Rock, AR 72118
501-376-3633
www.GarverUSA.com

CERTIFICATE OF AUTHORIZATION
GARVER LLC
No. 766
ARKANSAS ENGINEER

STATE OF ARKANSAS
LICENSED PROFESSIONAL ENGINEER
No. 10432
THOMAS C. GRAHAM, II
9/30/15

| Symbol | Description | Date | Appr |
|---|---|---|---|
| IFC | ISSUED FOR CONSTRUCTION | 10/1/15 | JRR |

Job Number: 061451

Submitted by: John T. Walters, III, PE, SE, Director, Federal Services

Designed by: T. GRAHAM
Plot Date: 9/30/15
Plot Scale: 1:1
Drawn by: T. BARTON
Dwg Code: .
Checked by: G. ARCHER
File Name: AH15WR-C-103.DWG

ARKANSAS HIGHWAY AND TRANSPORTATION DEPARTMENT
ARKANSAS TOURIST INFORMATION CENTER
(WHITE RIVER) (S)
JOB 061451

TOURIST INFORMATION CENTER AND MAINTENANCE BUILDING GRADING AND EROSION CONTROL PLAN (WESTBOUND)

Sheet Reference Number:
C-103

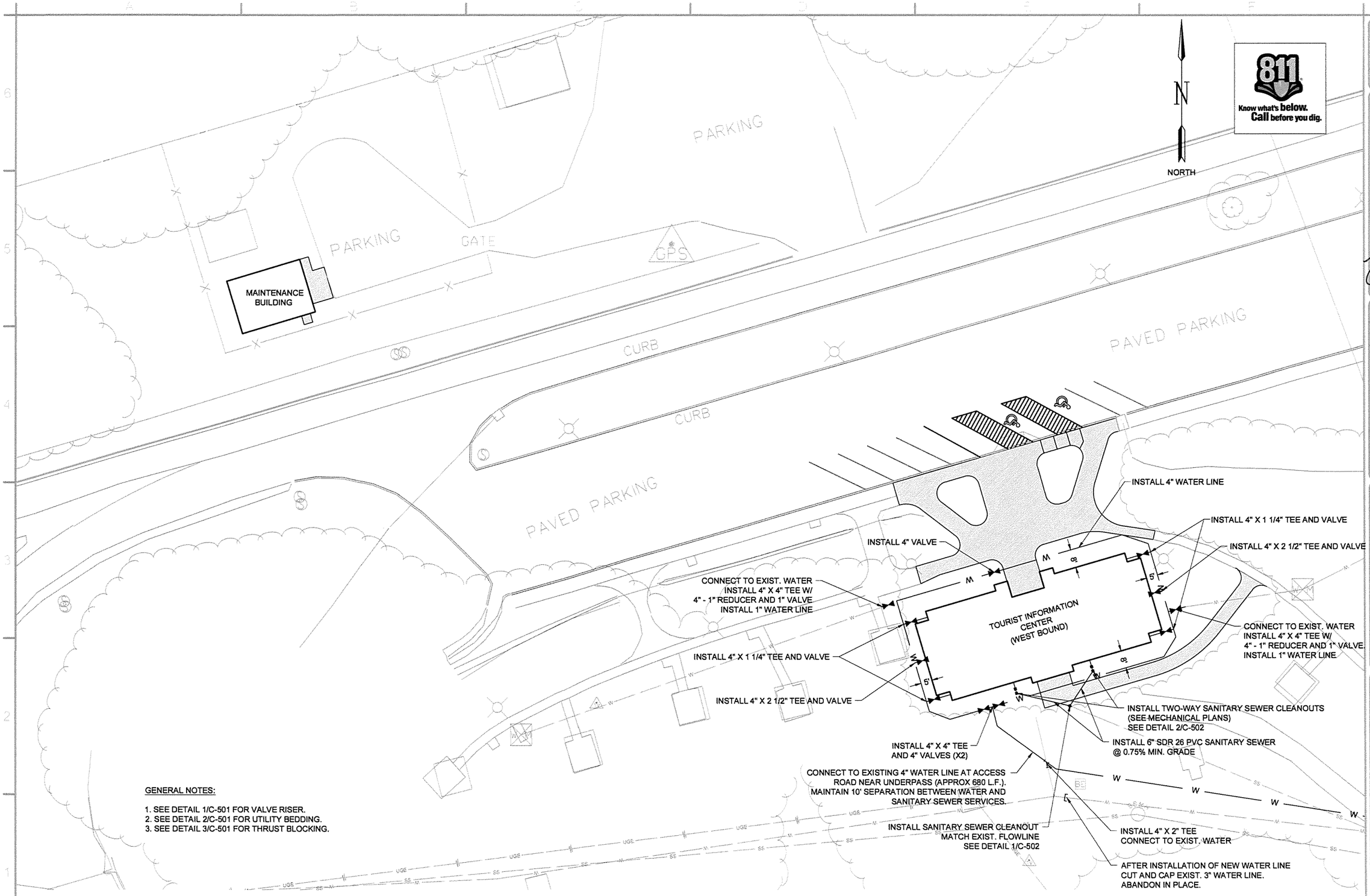


GENERAL NOTES:

1. SEE DETAIL 1/C-501 FOR VALVE RISER.
2. SEE DETAIL 2/C-501 FOR UTILITY BEDDING.
3. SEE DETAIL 3/C-501 FOR THRUST BLOCKING.

1 / C-104 UTILITY PLAN I (WESTBOUND)

SCALE: 1" = 20'

0 10' 20' 40' 60'

SCALE: 1" = 20'


GARVER
4701 Northshore Drive
N Little Rock, AR 72118
501-376-3633
www.GarverUSA.com


CERTIFICATE OF AUTHORIZATION
GARVER LLC
No. 766
ARKANSAS ENGINEER

STATE OF ARKANSAS
LICENSED PROFESSIONAL ENGINEER
No. 10432
THOMAS C. GRAHAM, II
9/30/15

| Symbol | Description | Date | Appr. |
|---|---|---|---|
| IFC | ISSUED FOR CONSTRUCTION | 10/1/15 | JRR |

Designed by: T. GRAHAM
Drawn by: T.BARTON
Checked by: G. ARCHER
Submitted by: John T. Watkins, III, PE, SE Director, Federal Services
Plot Date: 9/30/15
Plot Scale: 1:1
Dwg Code: -
File Name: AH15WR-C-104.DWG
Job Number: 060451
N/A
N/A
N/A

ARKANSAS HIGHWAY AND TRANSPORTATION DEPARTMENT
ARKANSAS TOURIST INFORMATION CENTER
(WHITE RIVER) (S)
JOB 061451

TOURIST INFORMATION CENTER
AND MAINTENANCE BUILDING
UTILITY PLAN I (WESTBOUND)

Sheet Reference Number:
C-104

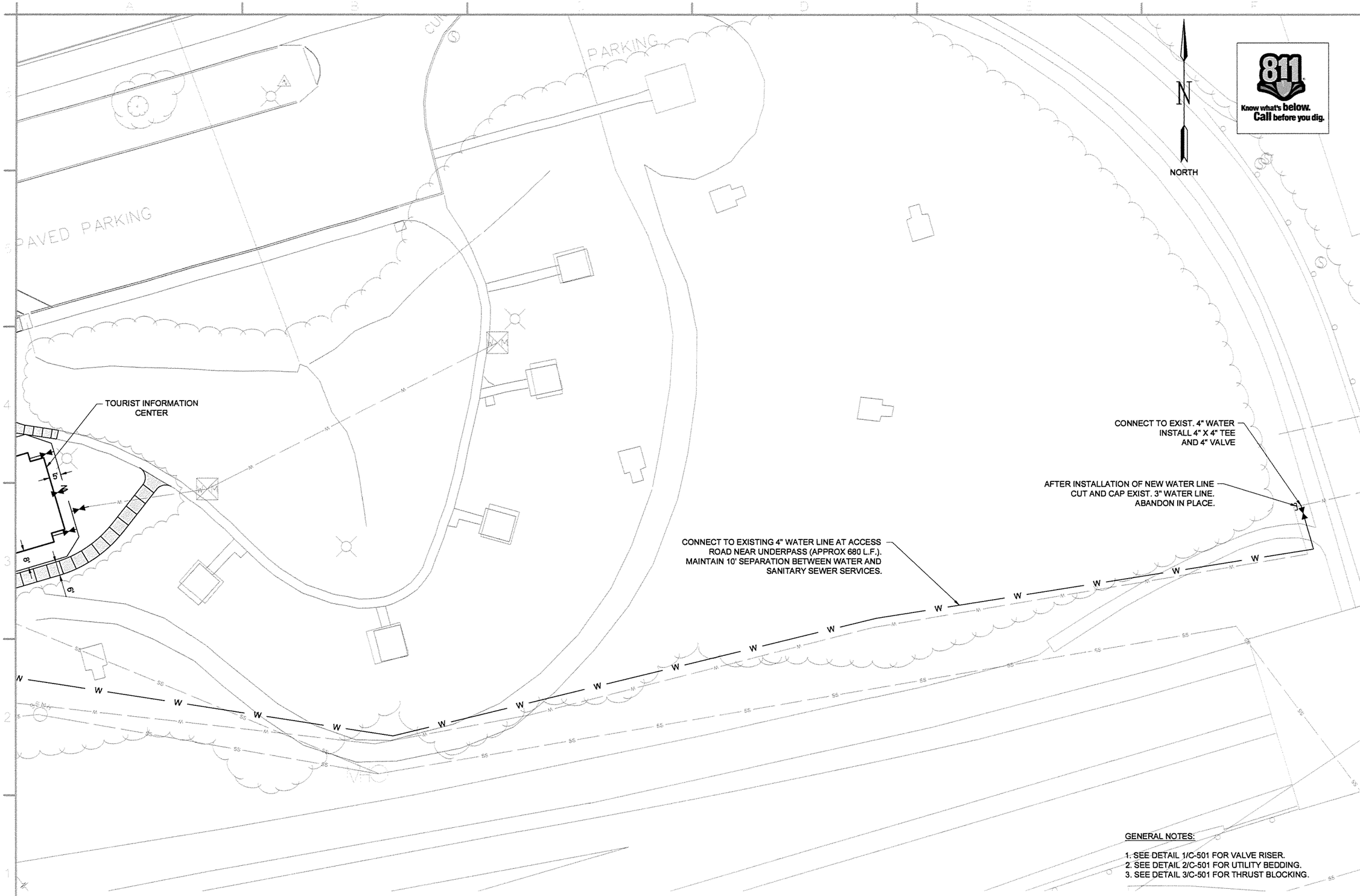


GENERAL NOTES:

1. SEE DETAIL 1/C-501 FOR VALVE RISER.
2. SEE DETAIL 2/C-501 FOR UTILITY BEDDING.
3. SEE DETAIL 3/C-501 FOR THRUST BLOCKING.

1 C-105 UTILITY PLAN II (WESTBOUND)

SCALE: 1" = 20'

GARVER
4701 Northshore Drive
N Little Rock, AR 72118
501-376-3633
www.GarverUSA.com

811 Know what's below. Call before you dig.

CERTIFICATE OF AUTHORIZATION GARVER LLC No. 766 ARKANSAS ENGINEER

STATE OF ARKANSAS LICENSED PROFESSIONAL ENGINEER No. 10432 THOMAS C. GRAHAM II

9/30/15

| Symbol | Description | Date | Appr. |
|---|---|---|---|
| IFC | ISSUED FOR CONSTRUCTION | 10/1/15 | JRR |

| | | | |
|---|---|---|---|
| Designed by: J RAMSEY | Submitted by: John T. Walters, III, PE, SE Director, Federal Services | Job Number 060451 | |
| Drawn by: J. DEMAINE | Plot Date: 9/30/15 | Plot Scale: 1:1 | N/A |
| Checked by: G. ARCHER | Dwg Code: . | N/A | . |
| File Name: A415WR-C-105.DWG | | N/A | . |

ARKANSAS HIGHWAY AND TRANSPORTATION DEPARTMENT
ARKANSAS TOURIST INFORMATION CENTER
(WHITE RIVER) (S)
JOB 061451

TOURIST INFORMATION CENTER
AND MAINTENANCE BUILDING
UTILITY PLAN II (WESTBOUND)

Sheet Reference Number:

C-105

REMOVAL AND DISPOSAL OF FENCE 47 LF

REMOVAL AND DISPOSAL OF WATER SPIGOT 1 EACH

REMOVAL AND DISPOSAL OF WATER LINE 70 LF

REMOVAL AND DISPOSAL OF SANITARY SEWER LINE 32 LF

REMOVAL AND DISPOSAL OF EXISTING BUILDINGS 2 EACH

REMOVAL AND RELOCATION OF LIGHT POLE 1 EACH SEE SHEET SE-101

REMOVAL AND DISPOSAL OF WATER LINE 20 LF

CLEARING AND GRUBBING TREES 0.20 AC

CLEARING AND GRUBBING TREES 0.10 AC

REMOVAL AND DISPOSAL OF CONCRETE WALKS 801 SQYD

REMOVE AND DISPOSAL OF POLE & FOUNDATION 2 EACH

REMOVAL AND DISPOSAL OF CURB AND GUTTER 18 LF

RREMOVAL OF PERMANENT PAVEMENT MARKINGS (WHEELCHAIR EMBLEMS) 2 EACH

REMOVAL OF PERMANENT PAVEMENT MARKINGS 89 LF

CURB

CURB

NORTH

SCALE: 1" = 20'

Know what's below. Call before you dig.

1 / C-111

## DEMOLITION PLAN (EASTBOUND)

SCALE: 1" = 20'


GARVER
4701 Northshore Drive
N Little Rock, AR 72118
501-376-3633
www.GarverUSA.com


CERTIFICATE OF AUTHORIZATION ARKANSAS ENGINEER GARVER LLC No. 766

STATE OF ARKANSAS LICENSED PROFESSIONAL ENGINEER No. 10432 THOMAS C. GRAHAM II

9/30/15

| Symbol | Description | Date | Appr |
|---|---|---|---|
| IFC | ISSUED FOR CONSTRUCTION | 10/1/15 | JRR |

Job Number 000451

Submitted by: John T. Walters, III, PE, SE Director, Federal Services

Designed by: T. GRAHAM

Plot Date: 9/30/15

Plot Scale: 1:1

Drawn by: T. BARTON

Dwg Code: -

Checked by: G. ARCHER

File Name: AH15WR-C-111.DWG

ARKANSAS HIGHWAY AND TRANSPORTATION DEPARTMENT
ARKANSAS TOURIST INFORMATION CENTER
(WHITE RIVER) (S)
JOB 081451

TOURIST INFORMATION CENTER
DEMOLITION PLAN (EASTBOUND)

Sheet Reference Number:

C-111

| TOURIST INFORMATION CENTER NODE LIST (EAST BOUND) | | | |
|---|---|---|---|
| POINT NUMBER | NORTHING | EASTING | DESCRIPTION |
| 200 | 2102074.24 | 1471831.81 | BLEG. COR. |
| 201 | 2102094.63 | 1471920.16 | BLEG. COR. |
| 202 | 2102094.54 | 1471881.21 | EDGE OF CONC. |
| 203 | 2102088.69 | 1471882.56 | EDGE OF CONC. |
| 204 | 2102085.38 | 1471868.21 | EDGE OF CONC. |
| 205 | 2102097.07 | 1471865.51 | EDGE OF CONC. |
| 206 | 2102107.84 | 1471912.15 | EDGE OF CONC. |
| 207 | 2102082.50 | 1471918.00 | RADIUS POINT |
| 208 | 2102088.35 | 1471943.33 | EDGE OF CONC. |
| 209 | 2102080.89 | 1471945.05 | EDGE OF CONC. |
| 210 | 2102084.04 | 1471958.69 | RADIUS POINT |
| 211 | 2102073.86 | 1471949.08 | EDGE OF CONC. |
| 212 | 2102066.48 | 1471956.89 | EDGE OF CONC. |
| 213 | 2102070.12 | 1471960.33 | RADIUS POINT |
| 214 | 2102066.73 | 1471964.00 | EDGE OF CONC. |
| 215 | 2102052.99 | 1471978.54 | RADIUS POINT |
| 216 | 2102072.91 | 1471976.71 | EDGE OF CONC. |
| 217 | 2102073.30 | 1471980.95 | EDGE OF CONC. |
| 218 | 2102069.32 | 1471981.31 | EDGE OF CONC. |
| 219 | 2102064.53 | 1471970.18 | EDGE OF CONC. |
| 220 | 2102051.24 | 1471957.63 | EDGE OF CONC. |
| 221 | 2102068.73 | 1471938.39 | RADIUS POINT |
| 222 | 2102043.40 | 1471944.24 | EDGE OF CONC. |
| 223 | 2102038.39 | 1471922.53 | EDGE OF CONC. |
| 224 | 2102030.60 | 1471924.33 | EDGE OF CONC. |
| 225 | 2102032.98 | 1471934.66 | EDGE OF CONC. |
| 226 | 2102012.52 | 1471939.38 | RADIUS POINT |
| 227 | 2102025.55 | 1471955.85 | EDGE OF CONC. |
| 228 | 2102016.71 | 1471962.84 | EDGE OF CONC. |
| 229 | 2102026.02 | 1471974.61 | RADIUS POINT |
| 230 | 2102011.36 | 1471977.77 | EDGE OF CONC. |
| 231 | 2102011.75 | 1471979.74 | EDGE OF CONC. |
| 232 | 2102005.89 | 1471981.00 | EDGE OF CONC. |
| 233 | 2101961.08 | 1471769.26 | EDGE OF CONC. |
| 234 | 2101966.95 | 1471768.01 | EDGE OF CONC. |
| 235 | 2101968.28 | 1471774.25 | EDGE OF CONC. |
| 236 | 2101987.84 | 1471770.07 | RADIUS POINT |
| 237 | 2101977.08 | 1471786.93 | EDGE OF CONC. |
| 238 | 2102025.62 | 1471817.91 | EDGE OF CONC. |
| 239 | 2102031.00 | 1471809.48 | RADIUS POINT |
| 240 | 2102041.00 | 1471809.74 | EDGE OF CONC. |
| 241 | 2102045.00 | 1471809.77 | EDGE OF CONC. |
| 242 | 2102035.10 | 1471822.87 | EDGE OF CONC. |
| 243 | 2102031.98 | 1471823.59 | EDGE OF CONC. |
| 244 | 2102034.23 | 1471833.33 | RADIUS POINT |
| 245 | 2102024.48 | 1471835.58 | EDGE OF CONC. |
| 246 | 2102033.59 | 1471875.06 | EDGE OF CONC. |
| 247 | 2102038.47 | 1471873.94 | RADIUS POINT |
| 248 | 2102040.57 | 1471878.58 | EDGE OF CONC. |
| 249 | 2102043.86 | 1471892.87 | EDGE OF CONC. |
| 250 | 2102044.01 | 1471897.97 | READIUS POINT |
| 251 | 2102039.14 | 1471899.10 | EDGE OF CONC. |
| 252 | 2102055.38 | 1471953.26 | EDGE OF CONC. |
| 253 | 2102058.48 | 1471949.34 | RADIUS POINT |
| 254 | 2102062.12 | 1471952.77 | EDGE OF CONC. |
| 255 | 2101990.38 | 1471834.57 | RADIUS POINT |
| 256 | 2102014.74 | 1471828.94 | EDGE OF CONC |
| 257 | 2102018.45 | 1471845.03 | EDGE OF CONC |
| 258 | 2102008.71 | 1471847.28 | RADIUS POINT |
| 259 | 2102010.96 | 1471857.02 | EDGE OF CONC. |
| 260 | 2102009.01 | 1471857.47 | EDGE OF CONC. |
| 261 | 2102014.11 | 1471879.56 | EDGE OF CONC. |
| 262 | 2102009.23 | 1471880.68 | RADIUS POINT |
| 263 | 2102010.36 | 1471885.55 | EDGE OF CONC. |
| 264 | 2101997.20 | 1471888.59 | EDGE OF CONC. |
| 265 | 2101996.08 | 1471883.72 | RADIUS POINT |
| 266 | 2101991.16 | 1471884.63 | EDGE OF CONC |
| 269 | 2101974.30 | 1471804.67 | EDGE OF CONC |
| 270 | 2101979.21 | 1471803.71 | RADIUS POINT |
| 271 | 2102014.78 | 1471904.72 | RADIUS POINT |
| 272 | 2102019.65 | 1471903.59 | EDGE OF CONC. |
| 273 | 2102027.13 | 1471936.01 | EDGE OF CONC. |
| 274 | 2102011.24 | 1471953.14 | RADIUS POINT |
| 275 | 2102006.35 | 1471954.18 | EDGE OF CONC. |
| 280 | 2101996.31 | 1471908.99 | EDGE OF CONC. |
| 281 | 2102001.18 | 1471907.86 | RADIUS POINT |
| 282 | 2102053.30 | 1471951.10 | SIDEWALK DRAIN |
| 283 | 2102049.15 | 1471955.48 | SIDEWALK DRAIN |
| 284 | 2102004.51 | 1471886.90 | CONC. STEPS |
| 285 | 2101999.64 | 1471888.03 | CONC. STEPS |
| 295 | 2101975.02 | 1471808.35 | EDGE OF RAMP |
| 296 | 2101978.72 | 1471825.84 | EDGE OF RAMP |

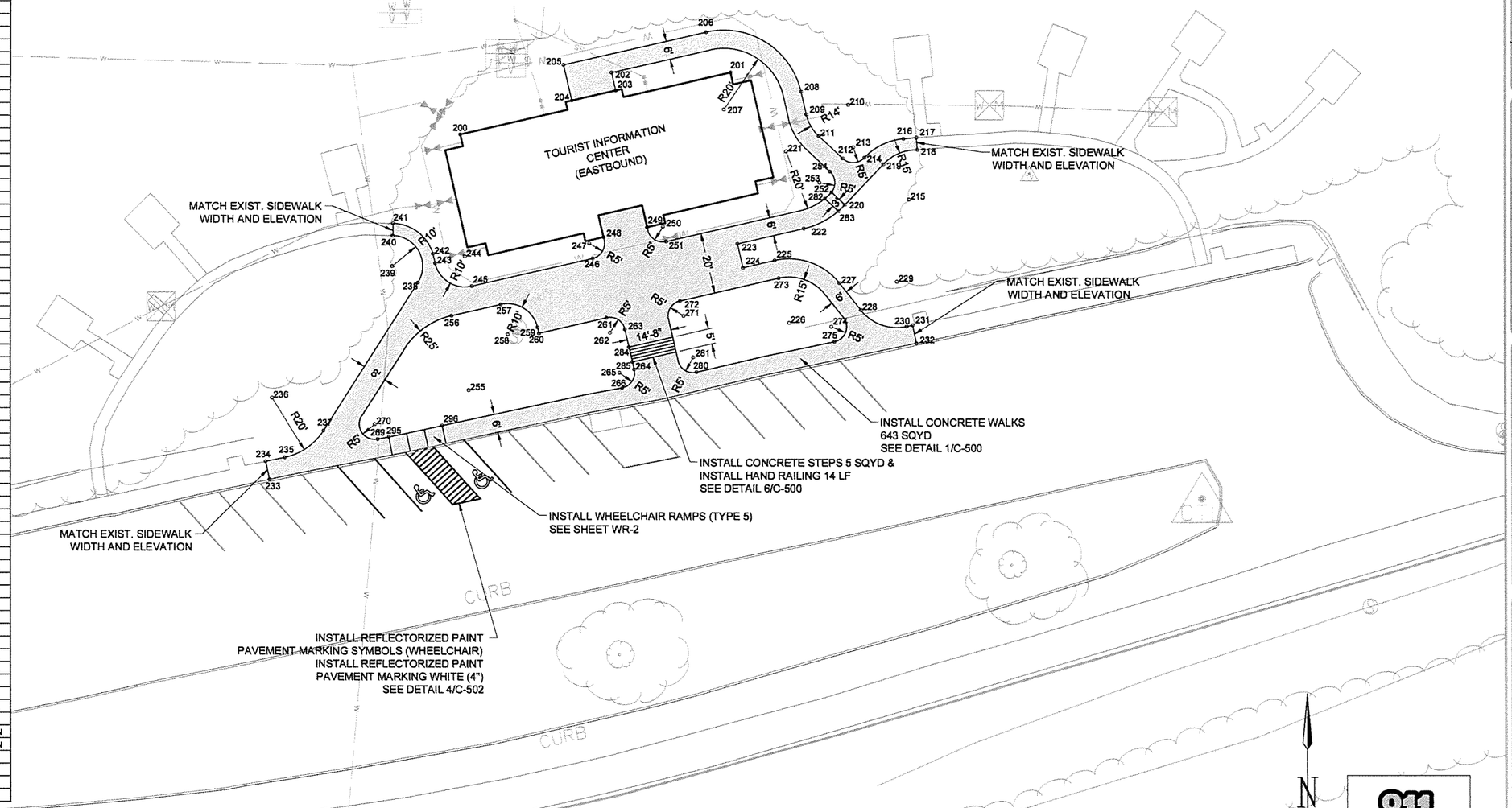


1 C-112

## SITE PLAN (EASTBOUND)

SCALE: 1" = 20'

NORTH

0 10' 20' 40' 60'

SCALE: 1" = 20'

Know what's below. Call before you dig.


GARVER
4701 Northshore Drive
N Little Rock, AR 72118
501-376-3633
www.GarverUSA.com


CERTIFICATE OF AUTHORIZATION ARKANSAS ENGINEER GARVER LLC No. 766

STATE OF ARKANSAS LICENSED PROFESSIONAL ENGINEER THOMAS C. GRAHAM II No. 10432

9/30/15

| Symbol | Description | Date | Appr |
|---|---|---|---|
| IFC | ISSUED FOR CONSTRUCTION | 10/1/15 | JRR |

Job Number 060451

Submitted by: John T. Walters, III, PE, SE Director, Federal Services

Plot Date: 9/30/15 | Plot Scale: 1:1

Designed by: T. GRAHAM | Drawn by: T. DARTON | Checked by: G. ARCHER | Dwg Code: . | File Name: AH15WR-C-112.DWG

ARKANSAS HIGHWAY AND TRANSPORTATION DEPARTMENT
ARKANSAS TOURIST INFORMATION CENTER
(WHITE RIVER) (S)
JOB 061451

TOURIST INFORMATION CENTER
SITE PLAN (EASTBOUND)

Sheet Reference Number:

C-112

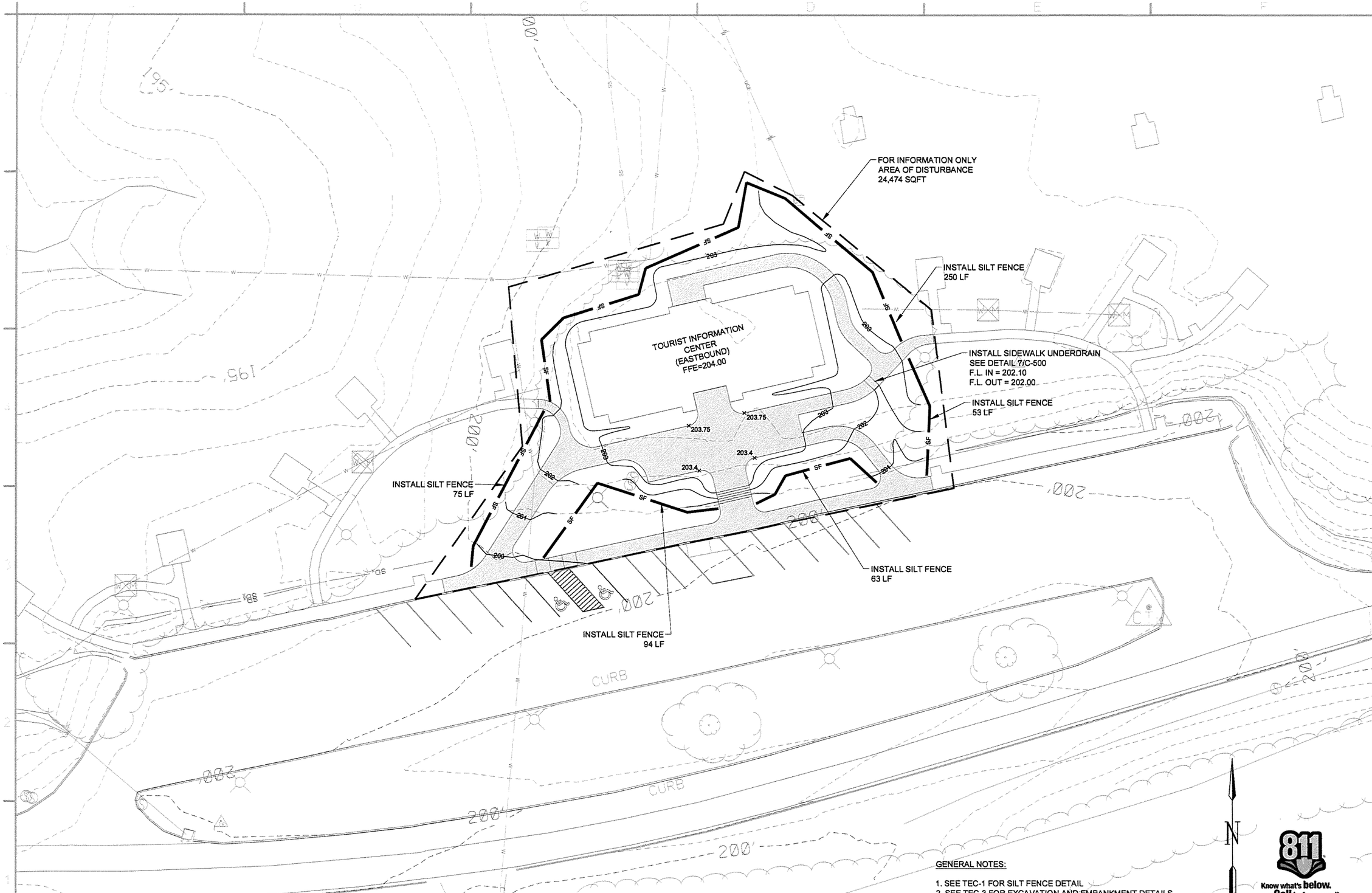


GENERAL NOTES:

1. SEE TEC-1 FOR SILT FENCE DETAIL
2. SEE TEC-3 FOR EXCAVATION AND EMBANKMENT DETAILS

NORTH

0 10' 20' 40' 60'

SCALE: 1" = 20'

811 Know what's below. Call before you dig.

1 / C-113 GRADING AND EROSION CONTROL PLAN (EASTBOUND)

SCALE: 1" = 20'


GARVER
4701 Northshore Drive
N Little Rock, AR 72118
501-376-3633
www.GarverUSA.com


CERTIFICATE OF AUTHORIZATION
GARVER LLC
No. 766
ARKANSAS ENGINEER

STATE OF ARKANSAS
LICENSED PROFESSIONAL ENGINEER
No. 10432
THOMAS C. GRAHAM, II
9/30/15

| Symbol | Description | Date | Appr. |
|---|---|---|---|
| IFC | ISSUED FOR CONSTRUCTION | 10/1/15 | JRR |

Job Number: 060451

Submitted by: John T. Watkins, III, PE, SE, Director, Federal Services

Plot Date: 9/30/15 | Plot Scale: 1:1

Drwg Code: -

File Name: AH15WR-C-113.DWG

Designed by: T. GRAHAM | Drawn by: T. BARTON | Checked by: G. ARCHER

ARKANSAS HIGHWAY AND TRANSPORTATION DEPARTMENT
ARKANSAS TOURIST INFORMATION CENTER
(WHITE RIVER) (S)
JOB 061451

TOURIST INFORMATION CENTER
GRADING AND EROSION CONTOL PLAN
(EASTBOUND)

Sheet Reference Number:

C-113

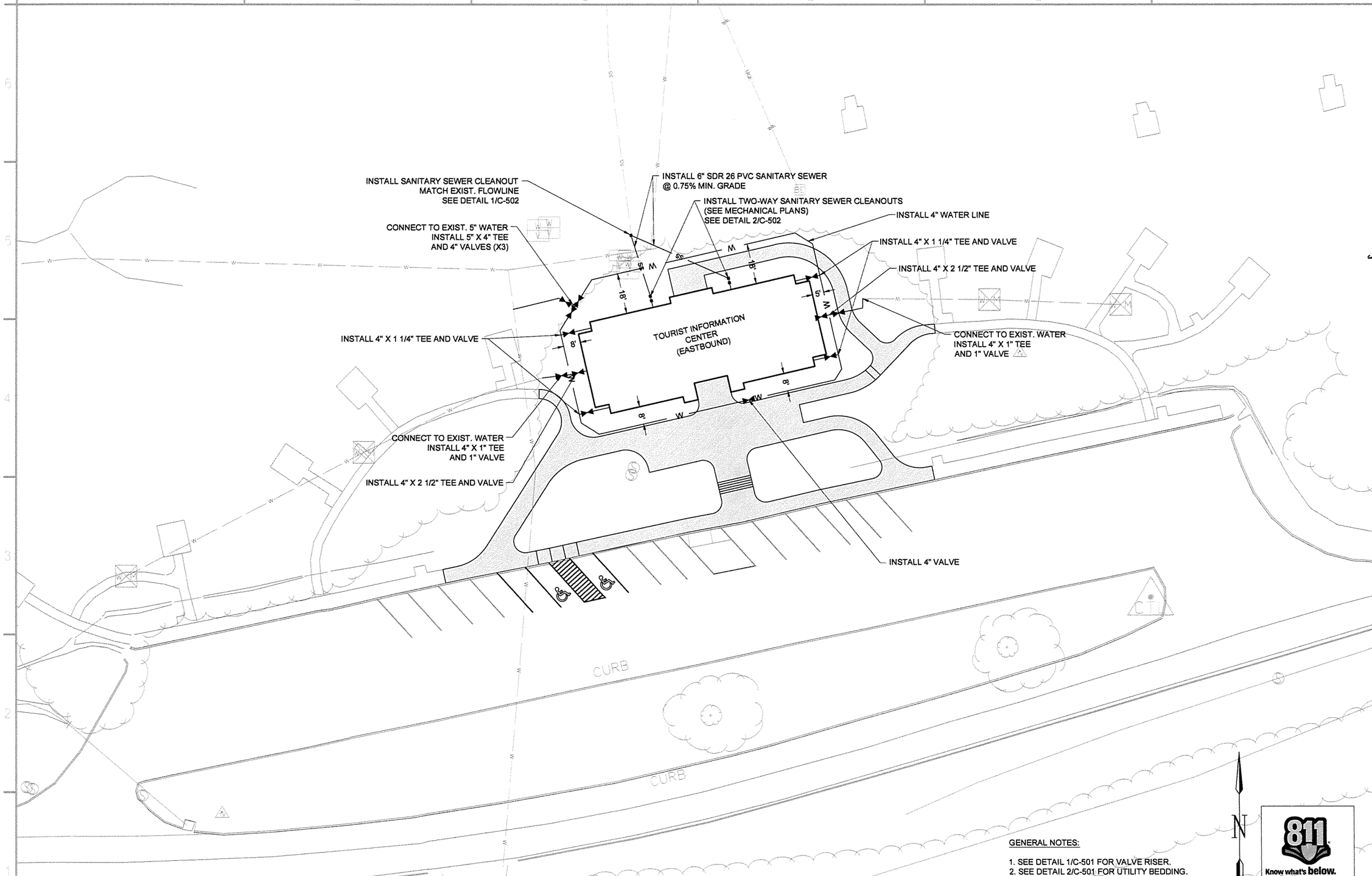


GENERAL NOTES:

1. SEE DETAIL 1/C-501 FOR VALVE RISER.
2. SEE DETAIL 2/C-501 FOR UTILITY BEDDING.
3. SEE DETAIL 3/C-501 FOR THRUST BLOCKING.

Know what's below. Call before you dig.

1 / C-114 SITE PLAN (EASTBOUND)

SCALE: 1" = 20'

GARVER
4701 Northshore Drive
N Little Rock, AR 72118
501-376-3633
www.GarverUSA.com

CERTIFICATE OF AUTHORIZATION ARKANSAS ENGINEER
GARVER LLC No. 766

STATE OF ARKANSAS LICENSED PROFESSIONAL ENGINEER No. 10432
THOMAS C. GRAHAM II
9/30/15

| Symbol | Description | Date | App |
|---|---|---|---|
| IFC | ISSUED FOR CONSTRUCTION | 10/1/15 | JRR |

| | | | |
|---|---|---|---|
| Designed by: T. GRAHAM | Submitted by: John T. Williams, III, PE, SE Director, Federal Services | | Job Number 060451 |
| Drawn by: T. BARTON | Plot Date: 9/30/15 | Plot Scale: 1:1 | N/A |
| Checked by: G. ARCHER | Dwg Code: . | | N/A |
| File Name: AH15WR-C-114.DWG | | | N/A |

ARKANSAS HIGHWAY AND TRANSPORTATION DEPARTMENT
ARKANSAS TOURIST INFORMATION CENTER
(WHITE RIVER) (S)
JOB 081451

TOURIST INFORMATION CENTER
UTILITY PLAN (EASTBOUND)

Sheet Reference Number:
C-114

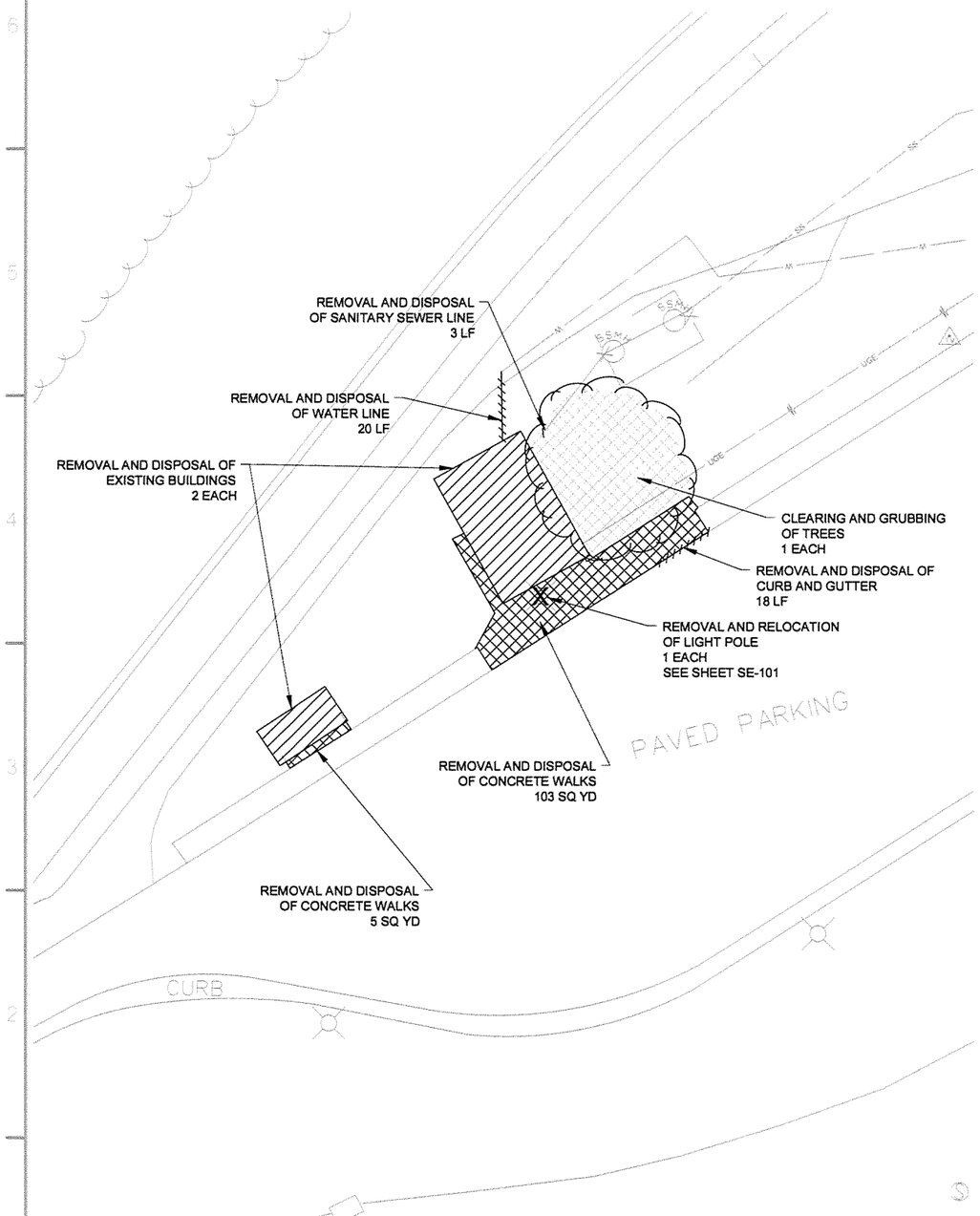


1 C-131 DEMOLITION PLAN (WESTBOUND)

SCALE: 1" = 20'

0 10' 20' 40' 60'

SCALE: 1" = 20'

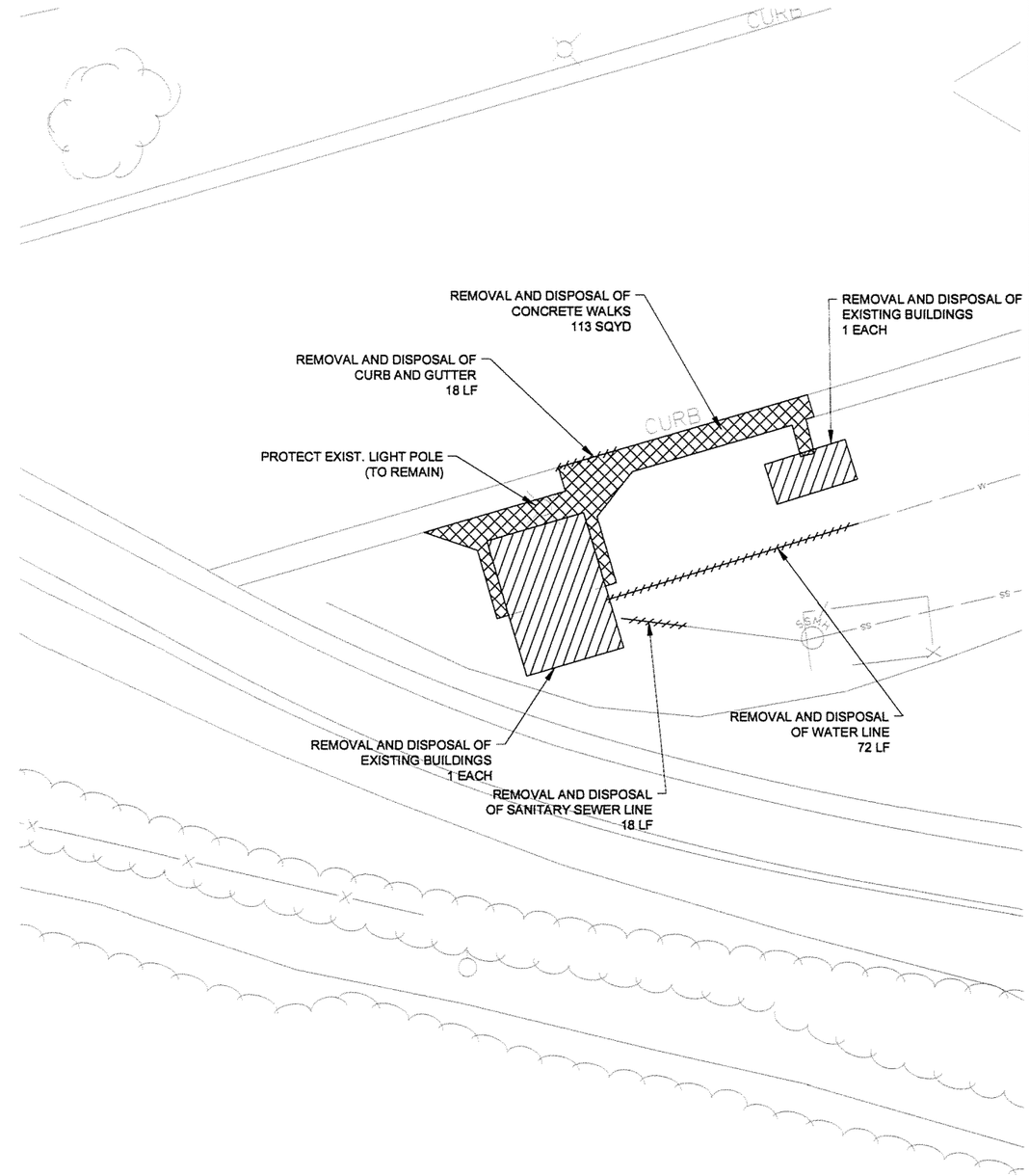


2 C-131 DEMOLITION PLAN (EASTBOUND)

SCALE: 1" = 20'

0 10' 20' 40' 60'

SCALE: 1" = 20'

N

NORTH

811 Know what's below. Call before you dig.


GARVER
4701 Northshore Drive
N Little Rock, AR 72118
501-376-3633
www.GarverUSA.com


CERTIFICATE OF AUTHORIZATION
GARVER LLC
No. 766
ARKANSAS ENGINEER

STATE OF ARKANSAS
LICENSED PROFESSIONAL ENGINEER
No. 10432
THOMAS C. GRAHAM, II
9/30/15

| Symbol | Description | Date | Appr. |
|---|---|---|---|
| IFC | ISSUED FOR CONSTRUCTION | 10/1/15 | JRR |

Job Number 060451

Submitted by: John T. Watters, III, PE, SE Director, Federal Services

Designed by: T. GRAHAM

Drawn by: T. BARTON

Plot Date: 9/30/15

Plot Scale: 1:1

Checked by: G. ARCHER

Dwg Code: -

File Name: AH15WR-C-131.DWG

ARKANSAS HIGHWAY AND TRANSPORTATION DEPARTMENT
ARKANSAS TOURIST INFORMATION CENTER
(WHITE RIVER) (S)
JOB 061451

TRUCKER-VENDING BUILDING
DEMOLITION PLAN
(EASTBOUND AND WESTBOUND)

Sheet Reference Number:

C-131

Sheet 18 of 130

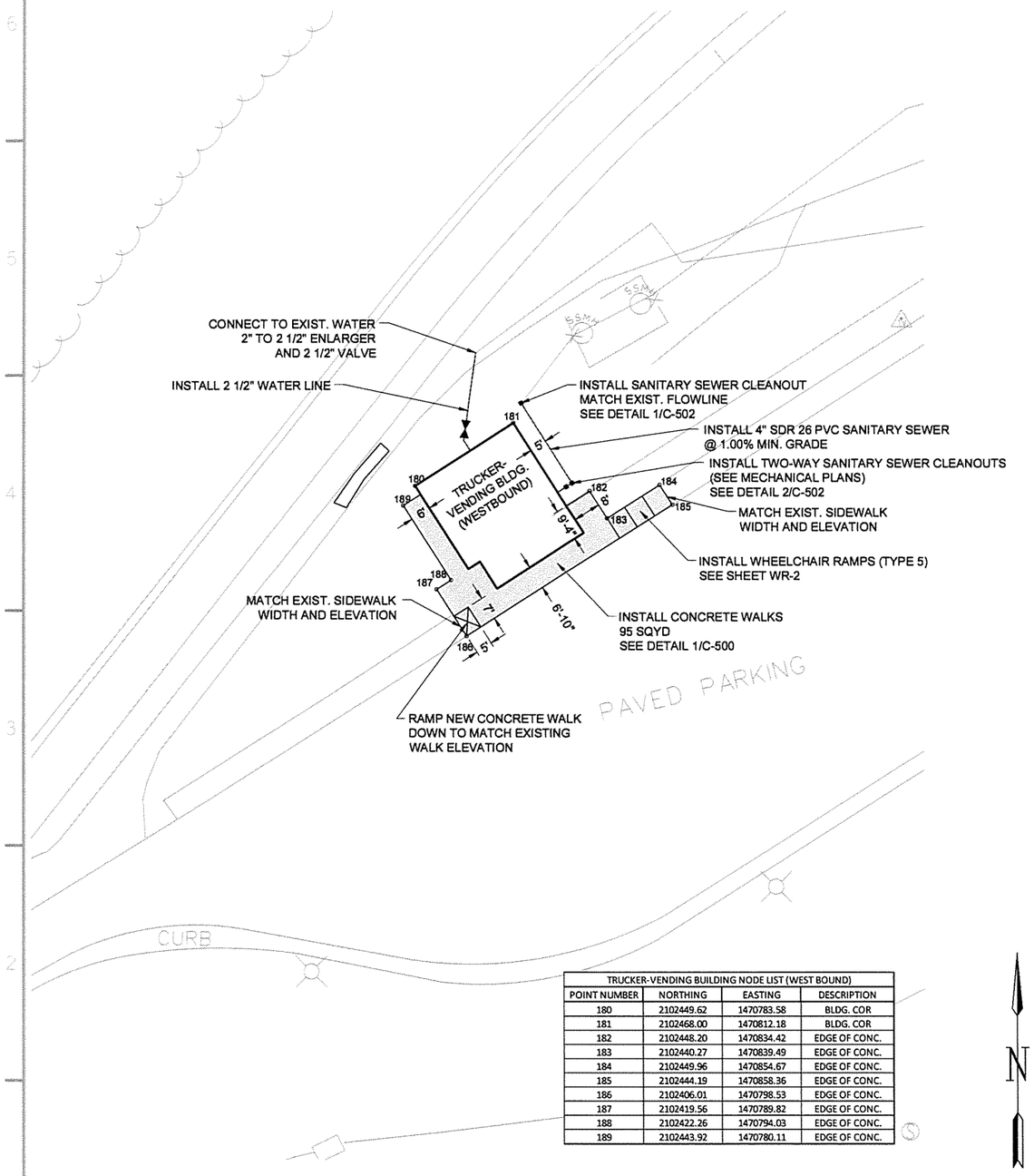


| TRUCKER-VENDING BUILDING NODE LIST (WEST BOUND) | | | |
|---|---|---|---|
| POINT NUMBER | NORTHING | EASTING | DESCRIPTION |
| 180 | 2102449.62 | 1470783.58 | BLDG. COR |
| 181 | 2102468.00 | 1470812.18 | BLDG. COR |
| 182 | 2102448.20 | 1470834.42 | EDGE OF CONC. |
| 183 | 2102440.27 | 1470839.49 | EDGE OF CONC. |
| 184 | 2102449.96 | 1470854.67 | EDGE OF CONC. |
| 185 | 2102444.19 | 1470858.36 | EDGE OF CONC. |
| 186 | 2102406.01 | 1470798.53 | EDGE OF CONC. |
| 187 | 2102419.56 | 1470789.82 | EDGE OF CONC. |
| 188 | 2102422.26 | 1470794.03 | EDGE OF CONC. |
| 189 | 2102443.92 | 1470780.11 | EDGE OF CONC. |

1 C-132

## SITE AND UTILITY PLAN (WESTBOUND)

SCALE: 1" = 20'

0 10' 20' 40' 60'

SCALE: 1" = 20'

N

NORTH

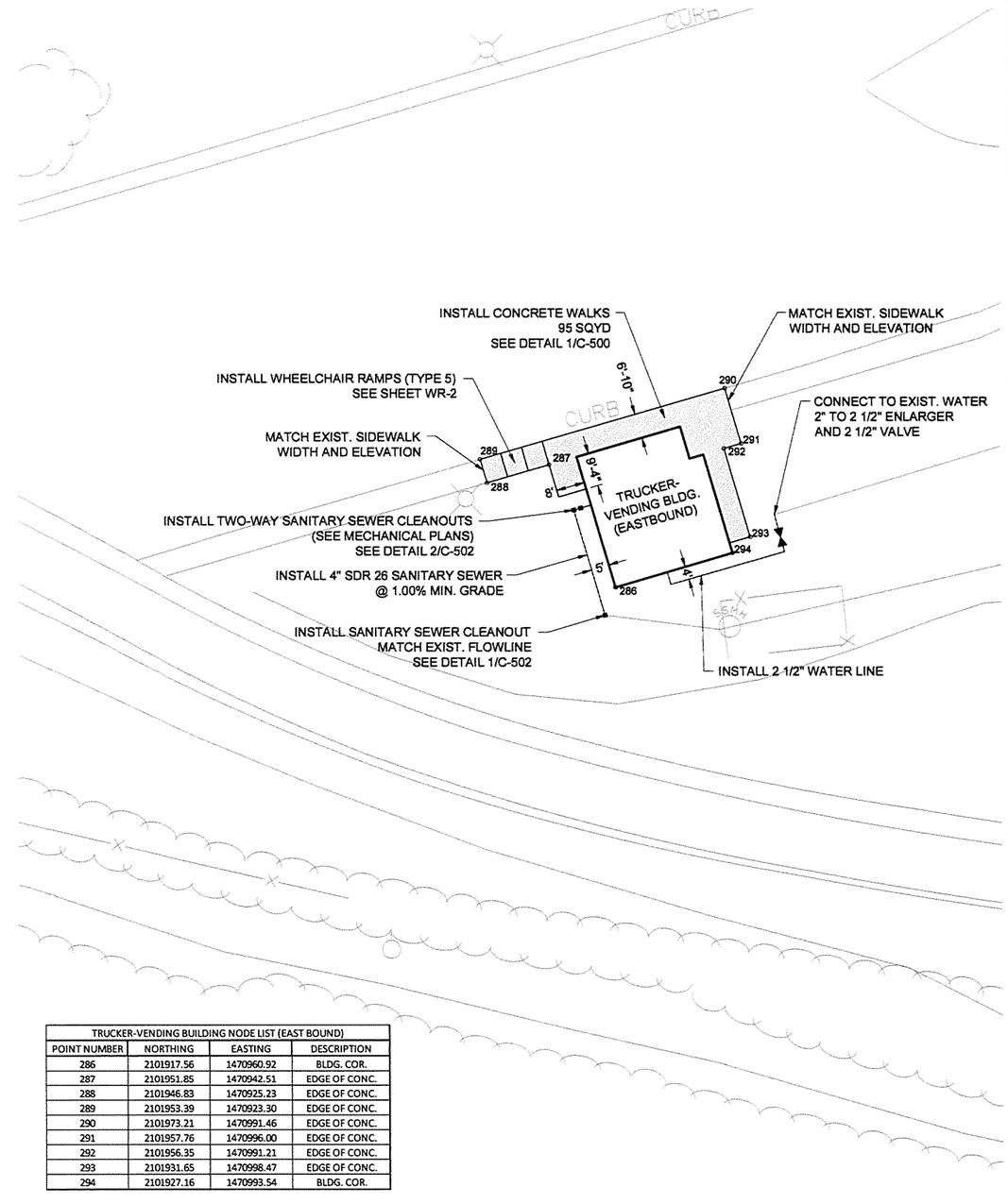


| TRUCKER-VENDING BUILDING NODE LIST (EAST BOUND) | | | |
|---|---|---|---|
| POINT NUMBER | NORTHING | EASTING | DESCRIPTION |
| 286 | 2101917.56 | 1470960.92 | BLDG. COR. |
| 287 | 2101951.85 | 1470942.51 | EDGE OF CONC. |
| 288 | 2101946.83 | 1470925.23 | EDGE OF CONC. |
| 289 | 2101953.39 | 1470923.30 | EDGE OF CONC. |
| 290 | 2101973.21 | 1470991.46 | EDGE OF CONC. |
| 291 | 2101957.76 | 1470996.00 | EDGE OF CONC. |
| 292 | 2101956.35 | 1470991.21 | EDGE OF CONC. |
| 293 | 2101931.65 | 1470998.47 | EDGE OF CONC. |
| 294 | 2101927.16 | 1470993.54 | BLDG. COR. |

2 C-132

## SITE AND UTILITY PLAN (EASTBOUND)

SCALE: 1" = 20'

0 10' 20' 40' 60'

SCALE: 1" = 20'

GENERAL NOTES:

1. SEE DETAIL 1/C-501 FOR VALVE RISER.
2. SEE DETAIL 2/C-501 FOR UTILITY BEDDING.
3. SEE DETAIL 3/C-501 FOR THRUST BLOCKING.

Know what's below. Call before you dig.

GARVER
4701 Northshore Drive
N Little Rock, AR 72118
501-376-3633
www.GarverUSA.com

CERTIFICATE OF AUTHORIZATION ARKANSAS ENGINEER GARVER LLC No. 766

STATE OF ARKANSAS LICENSED PROFESSIONAL ENGINEER No. 10432 JOHN T. C. GRAHAM, III 9/30/15

| Symbol | Description | Date | Appr. |
|---|---|---|---|
| IFC | ISSUED FOR CONSTRUCTION | 10/1/15 | JRR |

Job Number: B00451
Submitted by: John T. Watkins, III, PE, SE, Director, Federal Services
N/A
Designed by: T. GRAHAM
Plot Date: 9/30/15
Plot Scale: 1:1
N/A
Drawn by: T. BARTON
Drwg Code:
Checked by: G. ARCHER
N/A
File Name: AH15WR-C-132.DWG

ARKANSAS HIGHWAY AND TRANSPORTATION DEPARTMENT
ARKANSAS TOURIST INFORMATION CENTER
(WHITE RIVER) (S)
JOB 081451

TRUCKER-VENDING BUILDING
SITE AND UTILITY PLANS
(EASTBOUND AND WESTBOUND)

Sheet Reference Number: C-132

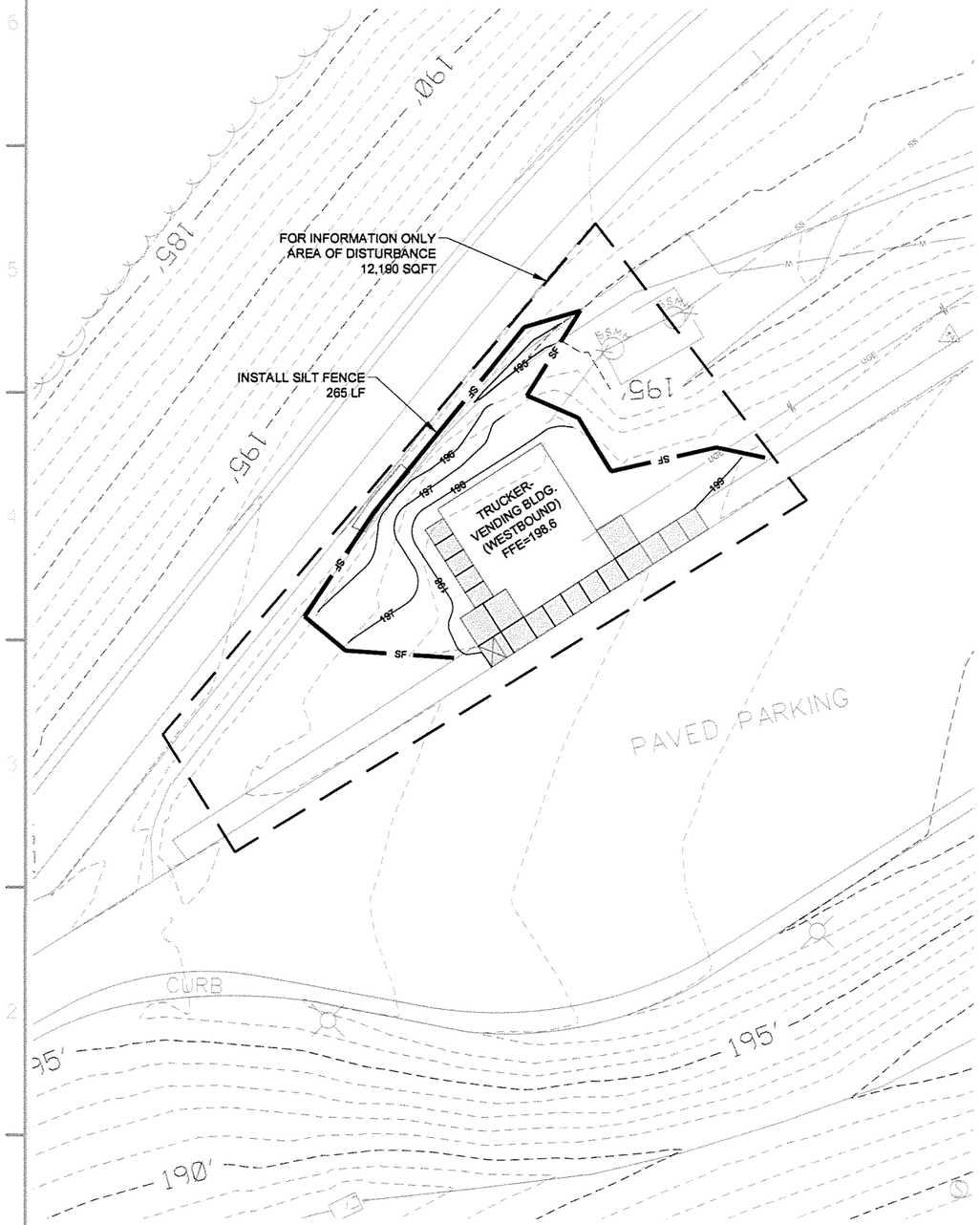


1 C-133 GRADING AND EROSION CONTROL PLAN (WEST BOUND)

SCALE: 1" = 20'

0 10' 20' 40' 60'

SCALE: 1" = 20'

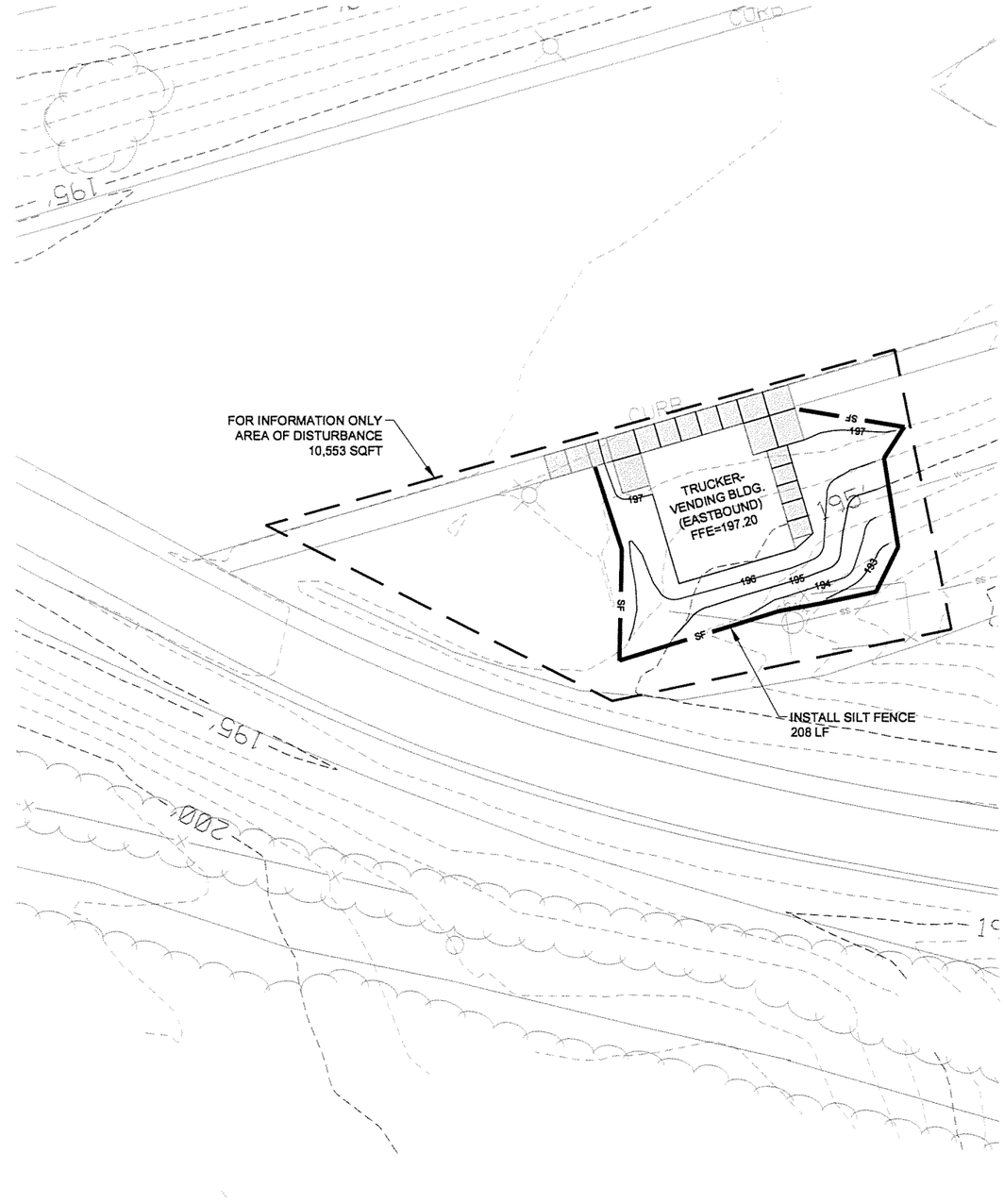


2 C-133 GRADING AND EROSION CONTROL PLAN (EAST BOUND)

SCALE: 1" = 20'

0 10' 20' 40' 60'

SCALE: 1" = 20'

N

NORTH

811 Know what's below. Call before you dig.

GENERAL NOTES:

1. SEE TEC-1 FOR SILT FENCE DETAIL
2. SEE TEC-3 FOR EXCAVATION AND EMBANKMENT DETAILS

GARVER
4701 Northshore Drive
N Little Rock, AR 72118
501-376-3633
www.GarverUSA.com

CERTIFICATE OF AUTHORIZATION ARKANSAS ENGINEER
GARVER LLC No. 766

STATE OF ARKANSAS
LICENSED PROFESSIONAL ENGINEER
No. 10432
THOMAS C. GRAHAM, II
9/30/15

| Symbol | Description | Date | Appr |
|---|---|---|---|
| IFC | ISSUED FOR CONSTRUCTION | 10/1/15 | JRR |

Job Number: 000451
Submitted by: John T. Walters, III, PE, SE, Director, Federal Services
N/A
Plot Scale: 1:1
Plot Date: 9/30/15
N/A
Drwg Code: .
Designed by: T. GRAYAM
Drawn by: T. BARTON
Checked by: G. ARCHER
File Name: AHTSWR-C-133.DWG

ARKANSAS HIGHWAY AND TRANSPORTATION DEPARTMENT
ARKANSAS TOURIST INFORMATION CENTER
(WHITE RIVER) (S)
JOB 081451

TRUCKER-VENDING BUILDING
GRADING AND EROSION CONTROL PLAN
(EASTBOUND AND WESTBOUND)

Sheet Reference Number:
C-133

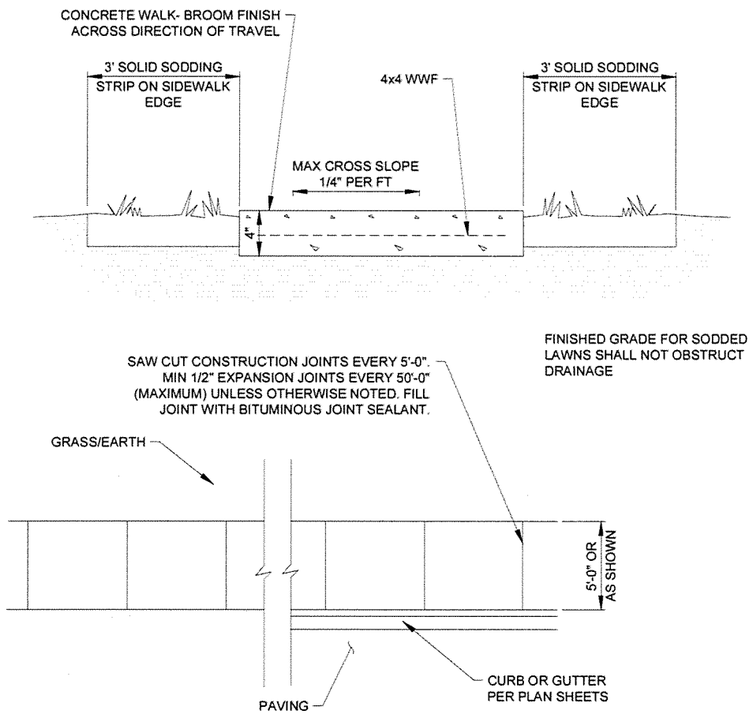


1 C-500 **TYPICAL SIDEWALK**
SCALE: NONE

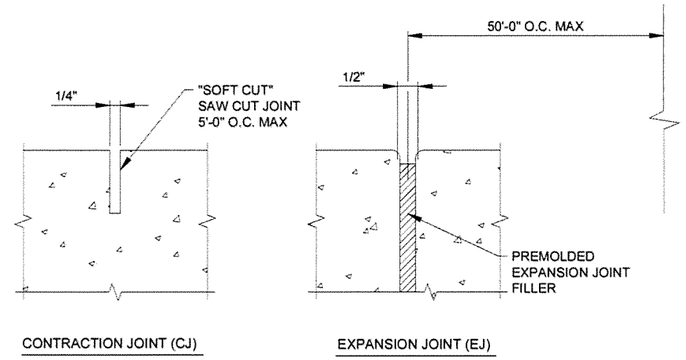


2 C-500 **WALK JOINT DETAILS**
SCALE: NONE

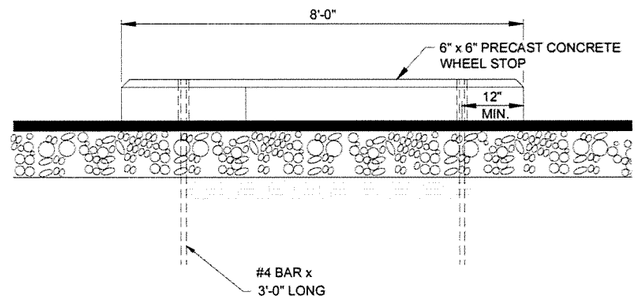


5 C-500 **TYPICAL WHEEL STOP**
SCALE: NONE

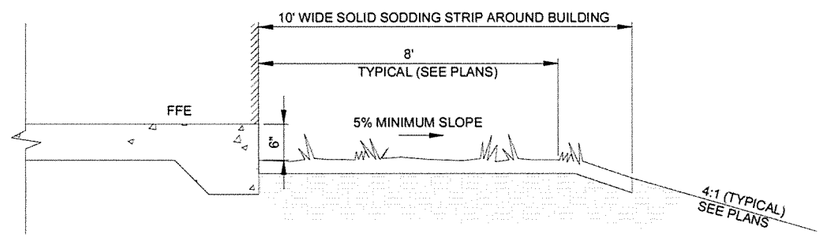


3 C-500 **TYPICAL BUILDING GRADING DETAIL**
SCALE: NONE

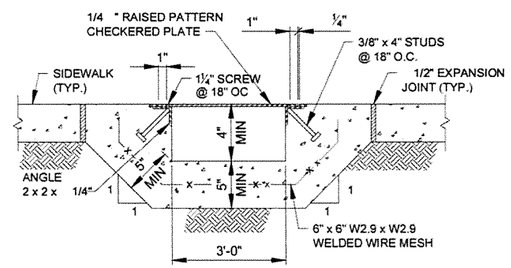


7 C-500 **TYPICAL WALK DRAIN**
SCALE: NONE

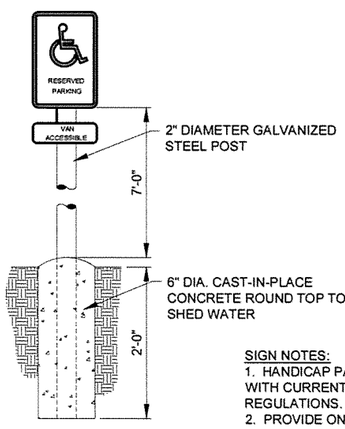


SIGN NOTES:
1. HANDICAP PARKING SIGN SHALL CONFORM WITH CURRENT ADA CODES AND REGULATIONS.
2. PROVIDE ONE HANDICAP SIGN AT EACH HANDICAP SPACE. VAN ACCESSIBLE SIGNS SHALL ONLY BE PLACED AT VAN ACCESSIBLE LOCATIONS.

4 C-500 **TYPICAL HANDICAP SIGNAGE**
SCALE: NONE

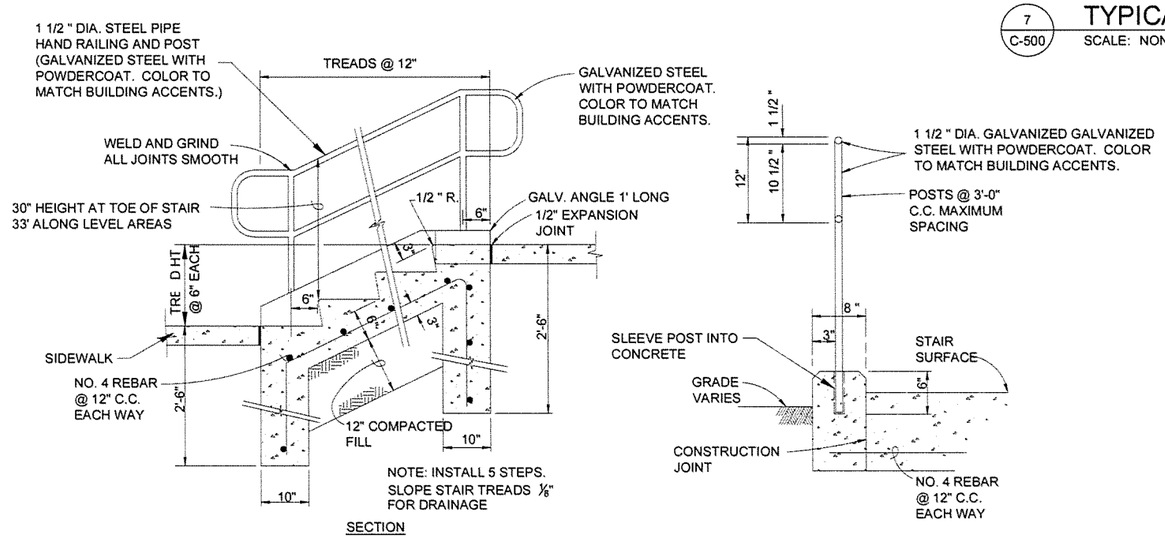


6 C-500 **CONCRETE STAIRS WITH HANDRAILING**
SCALE: NONE


GARVER
4701 Northshore Drive
N Little Rock, AR 72118
501-376-3633
www.GarverUSA.com


CERTIFICATE OF AUTHORIZATION ARKANSAS ENGINEER GARVER LLC No. 766

STATE OF ARKANSAS LICENSED PROFESSIONAL ENGINEER No. 10432 JOHN C. GRAHAM II
9/30/15

| Symbol | Description | Date | Appr |
|---|---|---|---|
| IFC | ISSUED FOR CONSTRUCTION | 10/1/15 | JRR |

Designed by: T. GRAHAM
Submitted by: John T. Watkins III, PE, SE Dimeldex Federal Services
Job Number: 061451
Drawn by: T. BARTON
Plot Date: 9/30/15
Plot Scale: 1:1
N/A
Checked by: G. ARCHER
Drwg Code:
N/A
File Name: AH150WR-C-500.DWG
N/A

ARKANSAS HIGHWAY AND TRANSPORTATION DEPARTMENT
ARKANSAS TOURIST INFORMATION CENTER
(WHITE RIVER) (S)
JOB 061451

DETAILS I

Sheet Reference Number:
C-500

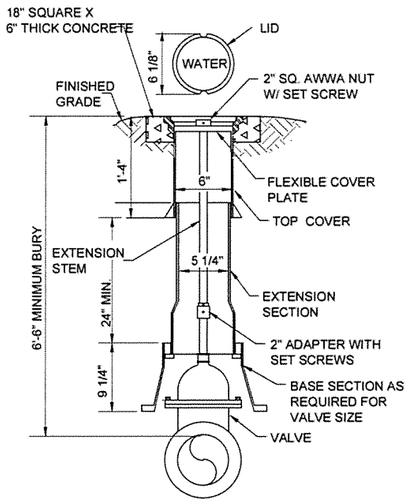


1 C-501 **VALVE RISER DETAIL**

SCALE: NONE

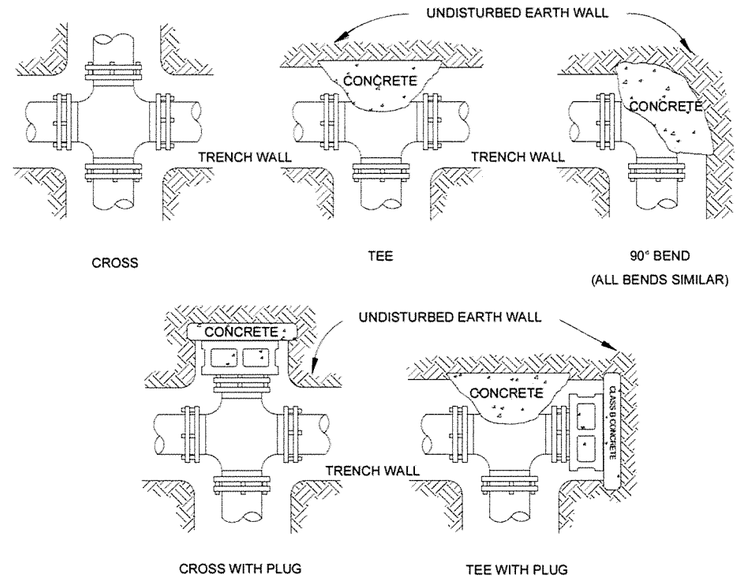


## HORIZONTAL FITTINGS

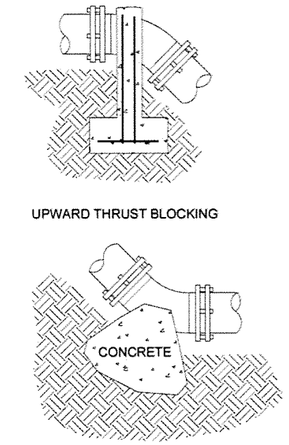


## VERTICAL FITTINGS

HORIZONTAL THRUST BLOCKING TABLE

| SIZE | REQUIRED SQ. FT. OF UNDISTURBED EARTHWALL FOR REACTION BACKING — TYPE OF FITTINGS | | | | |
|---|---|---|---|---|---|
| | TEE | 90° | 45° | 22 1/2° | 11 1/4° |
| 2" | 1 | 1 | 1 | 1 | 1 |
| 3" | 1 | 1 | 1 | 1 | 1 |
| 4" | 1 | 1 | 1 | 1 | 1 |
| 6" | 1.5 | 2 | 1 | 1 | 1 |
| 8" | 2.5 | 3.5 | 1.8 | 1 | 1 |
| 10" | 4 | 5.5 | 2.8 | 1.5 | 1 |
| 12" | 6 | 8 | 4 | 2 | 1.5 |
| 14" | 8 | 11 | 5.5 | 3 | 2 |
| 16" | 10 | 14.2 | 7 | 4 | 3 |
| 18" | 21 | 21 | 12 | 6 | 4 |
| 20" | 26 | 26 | 14 | 7 | 5 |
| 24" | 38 | 38 | 20 | 10 | 7 |
| 30" | 59 | 59 | 32 | 16 | 9 |
| 36" | 85 | 85 | 46 | 23 | 12 |

MINIMUM CONCRETE VOLUMES FOR UPWARD THRUST BLOCKING

| PIPE SIZE inches | 11.25 DEGREE BEND | | | 22.5 DEGREE BEND | | | 45 DEGREE BEND | | | 90 DEGREE BEND | | |
|---|---|---|---|---|---|---|---|---|---|---|---|---|
| | ANCHOR STRAPS | | Concrete VOLUME cu.yd. | ANCHOR STRAPS | | Concrete VOLUME cu.yd. | ANCHOR STRAPS | | Concrete VOLUME cu.yd. | ANCHOR STRAPS | | Concrete VOLUME cu.yd. |
| | NO. | SIZE | | NO. | SIZE | | NO. | SIZE | | NO. | SIZE | |
| 2.0 | 1 | #4Ø | 0.04 | 1 | #4Ø | 0.08 | 1 | #4Ø | 0.16 | 1 | #4Ø | 0.30 |
| 3.0 | 1 | #4Ø | 0.09 | 1 | #4Ø | 0.18 | 1 | #4Ø | 0.36 | 1 | #4Ø | 0.67 |
| 4.0 | 1 | #4Ø | 0.16 | 1 | #4Ø | 0.33 | 1 | #4Ø | 0.64 | 1 | #4Ø | 1.19 |
| 6.0 | 1 | #4Ø | 0.37 | 1 | #4Ø | 0.74 | 1 | #4Ø | 1.44 | 1 | #4Ø | 2.67 |
| 8.0 | 1 | #4Ø | 0.66 | 1 | #4Ø | 1.31 | 1 | #4Ø | 2.57 | 2 | #4Ø | 4.74 |
| 10.0 | 1 | #4Ø | 1.03 | 1 | #4Ø | 2.04 | 2 | #4Ø | 4.01 | 2 | #4Ø | 7.40 |
| 12.0 | 1 | #4Ø | 1.48 | 1 | #4Ø | 2.94 | 2 | #4Ø | 5.77 | 2 | #5Ø | 10.65 |
| 14.0 | 1 | #4Ø | 2.01 | 2 | #4Ø | 4.01 | 2 | #4Ø | 7.86 | 2 | #6Ø | 14.52 |
| 16.0 | 1 | #4Ø | 2.63 | 2 | #4Ø | 5.23 | 2 | #5Ø | 10.26 | 3 | #5Ø | 18.95 |

NOTE: 18" AND LARGER REQUIRES SPECIFIC DESIGN

NOTES:
1. DO NOT COVER BELLS OR FLANGES WITH CONCRETE.
2. WRAP ALL FITTINGS WITH VISQUEEN.
3. BACK ALL TEES ACCORDING TO SIZE OF BRANCH.
4. BACKING FUTURE LINE EXTENSIONS SHALL BE SUCH THAT LATER REMOVAL IS POSSIBLE.
5. ALL BENDS WHERE FITTINGS ARE USED, BOTH HORIZONTAL OR VERTICAL SHALL BE BACKED.
6. REACTION BACKING TABLE IS BASED ON 100 P.S.I. AND SOIL BEARING PRESSURE OF 2,500 P.S.F. ADDITIONAL BACKING MAY BE REQUIRED IN SOME AREAS AS DIRECTED BY ENGINEERS.
7. ALL CONCRETE SHALL BE 2,500 P.S.I.

3 C-501 **THRUST BLOCKING**

SCALE: NONE

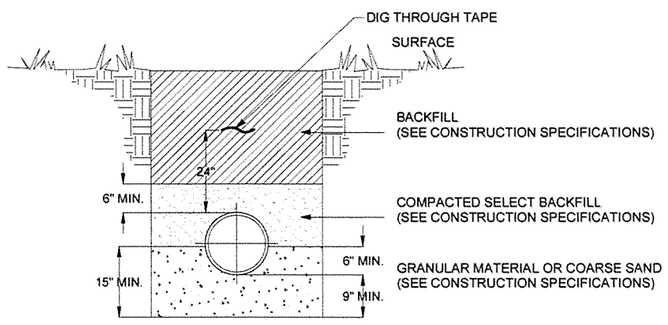


2 C-501 **UTILITY BEDDING DETAIL**

SCALE: NONE

NOTE:
ALL ITEMS SHOWN ON THIS PAGE WILL BE PAID AS "SITE UTILITIES" BY THE LUMP SUM.


GARVER
4701 Northshore Drive
N Little Rock, AR 72118
501-376-3633
www.GarverUSA.com


CERTIFICATE OF AUTHORIZATION ARKANSAS ENGINEER GARVER LLC No. 766

STATE OF ARKANSAS LICENSED PROFESSIONAL ENGINEER No. 10432 THOMAS C. GRAHAM 9/30/15

| Symbol | Description | Date | Appr. |
|---|---|---|---|
| IFC | ISSUED FOR CONSTRUCTION | 10/1/15 | JRR |

Submitted by: John T. Hussey III, PE, SE, Director, Federal Services. Job Number: 061451

Designed by: T. GRAHAM. Plot Date: 9/30/15. Plot Scale: 1:1. N/A

Drawn by: T. BARTON. Drag Code: . N/A

Checked by: G. ARCHER. File Name: AHTSWR-C-501.DWG. N/A

ARKANSAS HIGHWAY AND TRANSPORTATION DEPARTMENT
ARKANSAS TOURIST INFORMATION CENTER
(WHITE RIVER) (S)
JOB 061451

DETAILS II

Sheet Reference Number: C-501

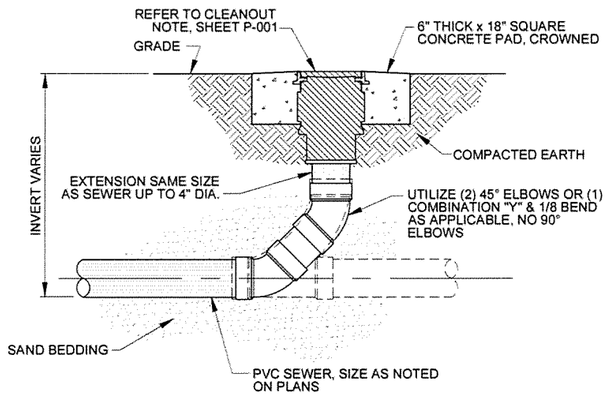


1 C-502 TYPICAL SANITARY SEWER CLEANOUT TO GRADE DETAIL

SCALE: NONE

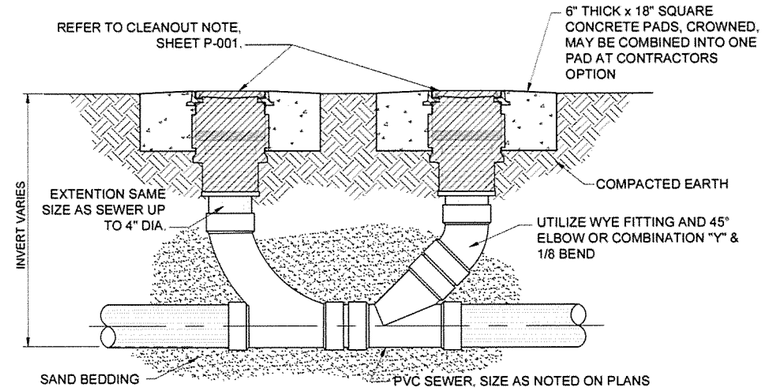


2 C-502 TYPICAL TWO-WAY SANITARY SEWER CLEANOUT TO GRADE DETAIL

SCALE: NONE

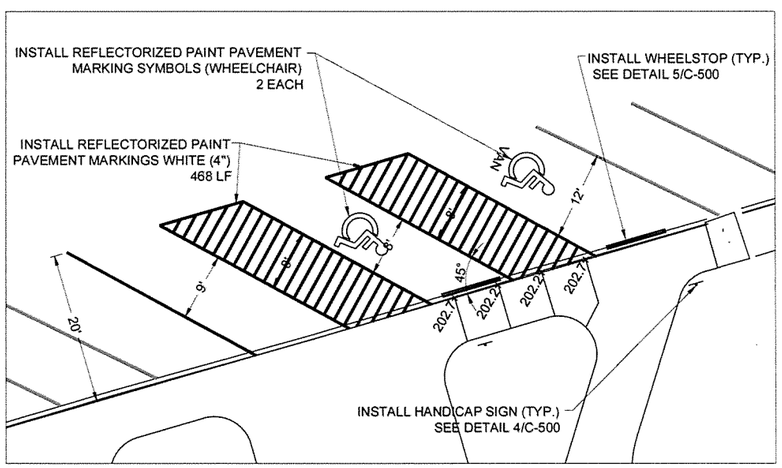


PROJECT NORTH

3 C-502 TYPICAL H.C. PARKING LAYOUT (WEST BOUND)

SCALE: 1" = 10'

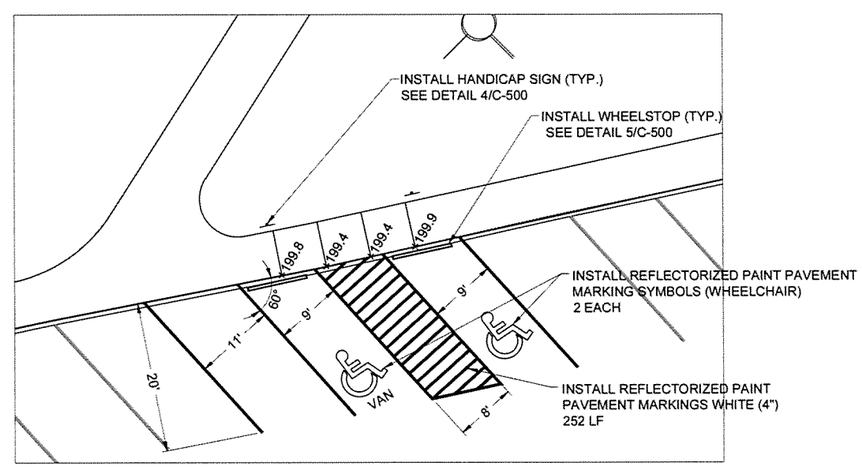


PROJECT NORTH

4 C-502 TYPICAL H.C. PARKING LAYOUT (EAST BOUND)

SCALE: 1" = 10'

GARVER
4701 Northshore Drive
N Little Rock, AR 72116
501-376-3633
www.GarverUSA.com

CERTIFICATE OF AUTHORIZATION GARVER LLC No. 766 ARKANSAS ENGINEER

STATE OF ARKANSAS LICENSED PROFESSIONAL ENGINEER No. 10432 THOMAS C. GRAHAM II
9/30/15

| Symbol | Description | Date | App |
|---|---|---|---|
| IFC | ISSUED FOR CONSTRUCTION | 10/1/15 | JRR |

Designed by: T. GRAHAM
Submitted by: John T. Williams, III, PE, SE, Director, Federal Services
Job Number: 060451
Drawn by: T. BARTON
Plot Date: 9/30/15
Plot Scale: 1:1
N/A
Checked by: G. ARCHER
Drawg Code: .
N/A
File Name: AHTSVIR-C-502.DWG
N/A

ARKANSAS HIGHWAY AND TRANSPORTATION DEPARTMENT
ARKANSAS TOURIST INFORMATION CENTER
(WHITE RIVER) (S)
JOB 061451

DETAILS III

Sheet Reference Number:
C-502

| FOR INFORMATION ONLY | |
|---|---|
| TYPE SA | 14 LOCATIONS |
| TYPE SB | 12 LOCATIONS |

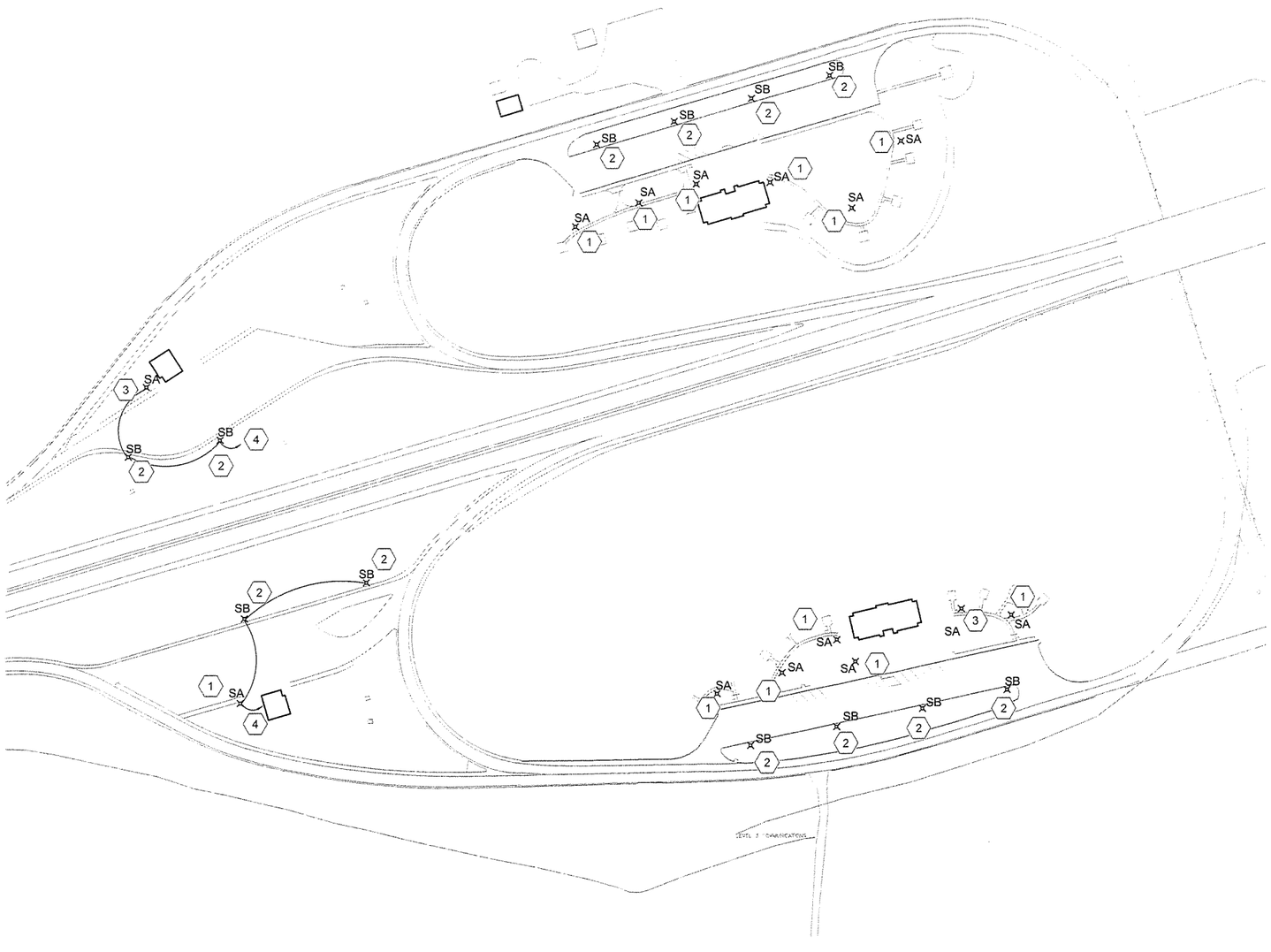


1 SE101 EXTERIOR AREA LIGHTING PLAN

SCALE: 1" = 100'

## KEYED NOTES

1. REPLACE EXISTING LIGHT FIXTURE WITH FIXTURE TYPE SA, REFER TO LIGHT FIXTURE SCHEDULE SHEET ON E-603 FOR FIXTURE DETAILS. REUSE EXISTING POLE, CONDUIT, AND WIRE.
2. REPLACE EXISTING LIGHT FIXTURE WITH FIXTURE TYPE SB, REFER TO LIGHT FIXTURE SCHEDULE SHEET ON E-603 FOR FIXTURE DETAILS. REUSE EXISTING POLE, CONDUIT, AND WIRE.
3. RELOCATE EXISTING LIGHTING STANDARD TO NEW LOCATION. REPLACE EXISTING LIGHT FIXTURE WITH FIXTURE TYPE SA, REFER TO LIGHT FIXTURE SCHEDULE SHEET ON E-602 FOR FIXTURE DETAILS. EXTEND EXISTING CONDUIT, AND WIRE AS REQUIRED.
4. EXTEND EXISTING LIGHTING CIRCUIT TO NEW PANEL TR.


GARVER
4701 Northshore Drive
N Little Rock, AR 72118
501-376-3633
www.GarverUSA.com


CERTIFICATE OF AUTHORIZATION
GARVER LLC
No. 766
ARKANSAS ENGINEER

STATE OF ARKANSAS
LICENSED PROFESSIONAL ENGINEER
No. 12569
BRYAN TODD MELTON

| IFC Symbol | Description | Date | Appr. |
|---|---|---|---|
| | ISSUED FOR CONSTRUCTION | 10/1/15 | JRR |

Job Number 060451

Submitted by: John T. Walkins, III, PE, SE, Director, Federal Services

Designed by: B. MELTON
Drawn by: H. HOOVER
Plot Date: 9/30/15
Plot Scale: 1:1
Checked by: S. FEEZOR
Dwg Code: -
File Name: AH15WR-SE101.DWG

ARKANSAS HIGHWAY AND TRANSPORTATION DEPARTMENT
ARKANSAS TOURIST INFORMATION CENTER
(WHITE RIVER) (S)
JOB 061451

EXTERIOR AREA LIGHTING PLAN

Sheet Reference Number:
SE101

0 50' 100' 200' 300'
SCALE: 1" = 100'

GENERAL NOTES

INSTALL A MINIMUM OF 2 UPSLOPE STAKES AND 4 DOWNSLOPE STAKES AT AN ANGLE TO WEDGE WATTLE TO BOTTOM OF DITCH.

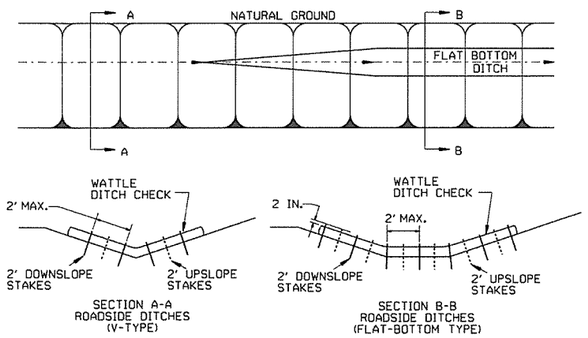


WATTLE DITCH CHECK (E-1)

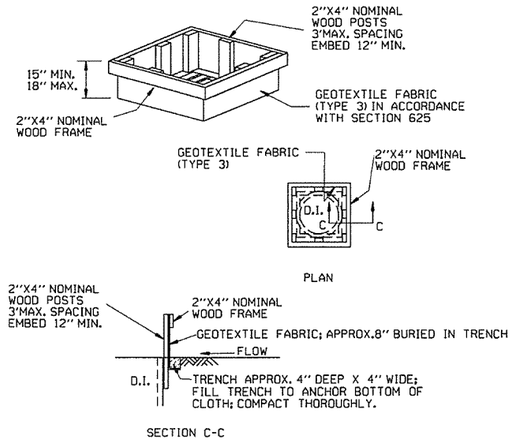


DROP INLET SILT FENCE (E-7)

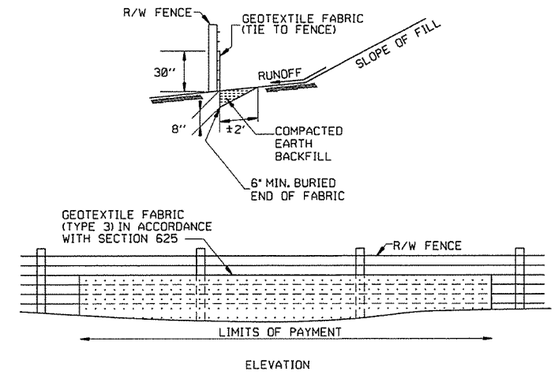


SILT FENCE ON R/W FENCE (E-4)

GENERAL NOTES

GEOTEXTILE FABRIC SHALL BE SPLICED TOGETHER WITH A SEWN SEAM ONLY AT A SUPPORT POST, OR TWO SECTIONS OF FENCE MAY BE OVERLAPPED INSTEAD. PAYMENT OF ADDITIONAL MATERIAL FOR OVERLAP WILL NOT BE MADE.

GENERAL NOTES

1. STRAW BALES SHALL BE INSTALLED SO THAT THE BINDINGS ARE ORIENTED AROUND THE SIDES RATHER THAN ALONG THE TOPS AND BOTTOMS OF THE BALES. THE BALES SHALL BE A MINIMUM OF 30 INCHES IN LENGTH.
2. NO GAPS SHALL BE LEFT BETWEEN BALES.
3. BALED STRAW FILTER BARRIERS COMPLETED AND ACCEPTED WILL BE MEASURED BY THE BALE IN PLACE AS AUTHORIZED BY THE ENGINEER AND WILL BE PAID FOR AT THE CONTRACT UNIT PRICE BID PER BALE FOR BALED STRAW DITCH CHECKS.

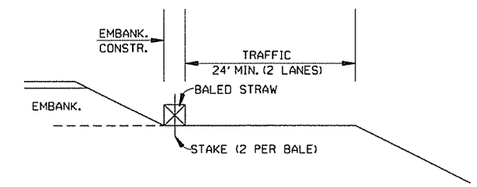


BALED STRAW FILTER BARRIER (E-2)

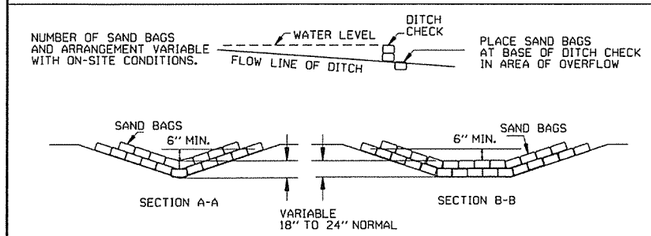


SAND BAG DITCH CHECK (E-5)

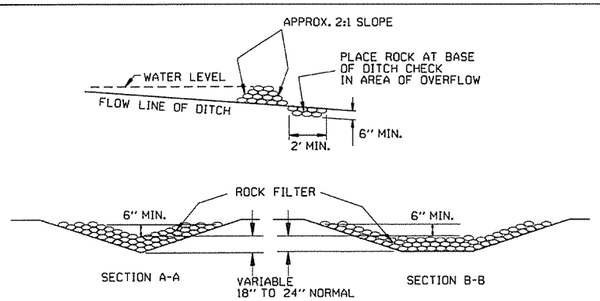


ROCK DITCH CHECK (E-6)

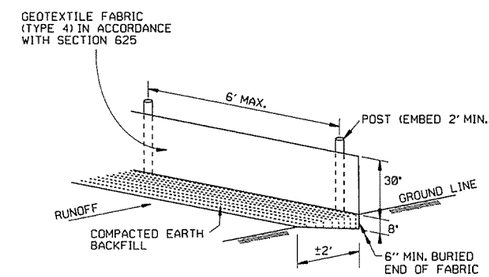


SILT FENCE (E-11)

GENERAL NOTES

GEOTEXTILE FABRIC SHALL BE SPLICED TOGETHER WITH A SEWN SEAM ONLY AT A SUPPORT POST OR TWO SECTIONS OF FENCE MAY BE OVERLAPPED INSTEAD. PAYMENT OF ADDITIONAL MATERIAL FOR OVERLAP WILL NOT BE MADE.

| DATE | REVISION | FILMED |
|---|---|---|
| 12-15-11 | DELETED BALED STRAW DITCH CHECK & ADDED WATTLE DITCH CHECK | |
| 11-18-98 | ADDED NOTES | |
| 7-02-98 | ADDED BALED STRAW FILTER BARRIER (E-2) | |
| 7-20-95 | REVISED SILT FENCE E-4 AND E-11 | 7-20-95 |
| 7-15-94 | REV. E-4 & E-11 MIN. 13" BURIED END OF FABRIC | |
| 6-2-94 | REVISED E-1,4,7 & 11; DELETED E-2 & 3 | 6-2-94 |
| 4-1-93 | REDRAWN | |
| 10-1-92 | REDRAWN | |
| 8-2-76 | ISSUED R.D.M. | 298-7-28-76 |

ARKANSAS STATE HIGHWAY COMMISSION

TEMPORARY EROSION CONTROL DEVICES

STANDARD DRAWING TEC-1

## CLEARING AND GRUBBING

CONSTRUCTION SEQUENCE

1. PLACE PERIMETER CONTROLS (I.E. SILT FENCES , DIVERSION DITCHES, SEDIMENT BASINS, ETC.)
2. PERFORM CLEARING AND GRUBBING OPERATION.

## EXCAVATION

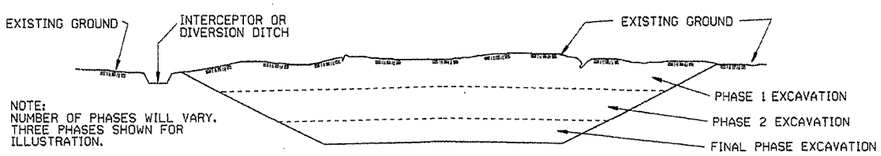


GENERAL NOTE

ALL CUT SLOPES SHALL BE DRESSED, PREPARED, SEEDED, AND MULCHED AS THE WORK PROGRESSES. SLOPES SHALL BE EXCAVATED AND STABILIZED IN EQUAL INCREMENTS NOT TO EXCEED 25 FEET, MEASURED VERTICALLY.

CONSTRUCTION SEQUENCE

1. EXCAVATE AND STABILIZE INTERCEPTOR AND/OR DIVERSION DITCHES.
2. PERFORM PHASE 1 EXCAVATION. PLACE PERMANENT OR TEMPORARY SEEDING.
3. PERFORM PHASE 2 EXCAVATION. PLACE PERMANENT OR TEMPORARY SEEDING.
4. PERFORM FINAL PHASE OF EXCAVATION. PLACE PERMANENT OR TEMPORARY SEEDING. STABILIZE DITCHES, CONSTRUCT DITCH CHECKS, DIVERSION DITCHES, SEDIMENT BASINS, OR OTHER EROSION CONTROL DEVICES AS REQUIRED.

## EMBANKMENT

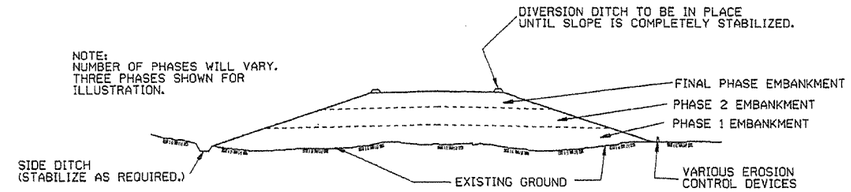


GENERAL NOTE

ALL EMBANKMENT SLOPES SHALL BE DRESSED, PREPARED, SEEDED, AND MULCHED AS THE WORK PROGRESSES. SLOPES SHALL BE CONSTRUCTED AND STABILIZED IN EQUAL INCREMENTS NOT TO EXCEED 25 FEET, MEASURED VERTICALLY.

CONSTRUCTION SEQUENCE

1. CONSTRUCT DIVERSION DITCHES, DITCH CHECKS, SEDIMENT BASINS, SILT FENCES, OR OTHER EROSION CONTROL DEVICES AS SPECIFIED.
2. PLACE PHASE 1 EMBANKMENT WITH PERMANENT OR TEMPORARY SEEDING. PROVIDE DIVERSION DITCHES AND SLOPE DRAINS IF EMBANKMENT CONSTRUCTION IS TO BE TEMPORARILY ABANDONED FOR A PERIOD OF GREATER THAN 21 DAYS.
3. PLACE PHASE 2 EMBANKMENT WITH PERMANENT OR TEMPORARY SEEDING. PROVIDE DIVERSION DITCHES AND SLOPE DRAINS IF EMBANKMENT CONSTRUCTION IS TO BE TEMPORARILY ABANDONED FOR A PERIOD OF GREATER THAN 21 DAYS.
4. PLACE FINAL PHASE OF EMBANKMENT WITH PERMANENT OR TEMPORARY SEEDING. PLACE DIVERSION DITCHES AND SLOPE DRAINS AND MAINTAIN UNTIL ENTIRE SLOPE IS STABILIZED.

| DATE | REVISION | FILMED |
|---|---|---|
| 11-03-94 | CORRECTED SPELLING | |
| 6-2-94 | Drawn & Issued | 6-2-94 |

ARKANSAS STATE HIGHWAY COMMISSION

TEMPORARY EROSION CONTROL DEVICES

STANDARD DRAWING TEC-3

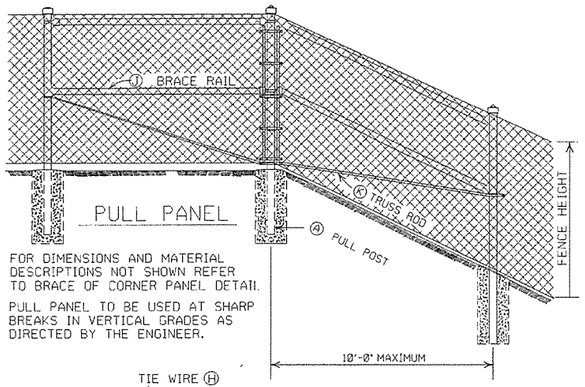


PULL PANEL

NOTE: FOR DIMENSIONS AND MATERIAL DESCRIPTIONS NOT SHOWN REFER TO BRACE OF CORNER PANEL DETAIL.

PULL PANEL TO BE USED AT SHARP BREAKS IN VERTICAL GRADES AS DIRECTED BY THE ENGINEER.

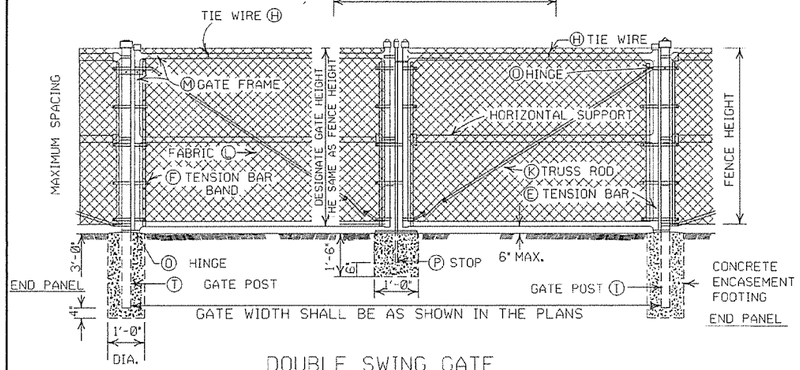


DOUBLE SWING GATE

POST SPACING DETAIL

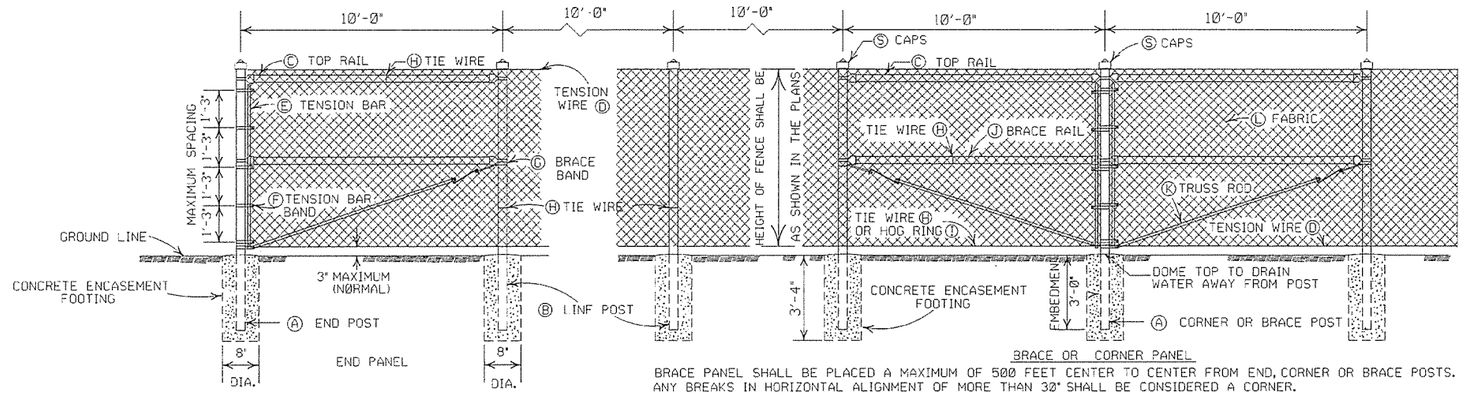


BRACE OR CORNER PANEL

BRACE PANEL SHALL BE PLACED A MAXIMUM OF 500 FEET CENTER TO CENTER FROM END, CORNER OR BRACE POSTS. ANY BREAKS IN HORIZONTAL ALIGNMENT OF MORE THAN 30° SHALL BE CONSIDERED A CORNER.

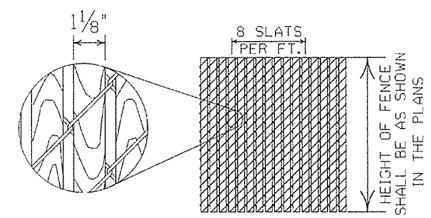


1⅛" X ¼" REDWOOD SLATS(LENGTH TO MATCH HEIGHT OF FENCE)

DETAIL OF REDWOOD SLAT INSTALLATION

(WHERE APPLICABLE)

## GENERAL NOTES:

(C) CHAIN LINK FENCE BEING PLACED ON PRIVATE PROPERTY SHALL INCLUDE A TOP RAIL. ALL LABOR, MATERIALS, EQUIPMENT, TOOLS, AND INCIDENTALS NECESSARY TO COMPLETE THE WORK WILL BE PAID FOR AT THE CONTRACT UNIT PRICE BID PER LIN. FT. OF CHAIN LINK FENCE.

(D) TENSION WIRE: SHALL BE SECURED TO ALL TERMINAL, PULL, BRACE OR CORNER POSTS WITH TENSION BAR BANDS.

(J) BRACE RAIL: BRACE RAILS SHALL BE PROVIDED AT ALL TERMINAL, PULL, BRACE OR CORNER POSTS HALFWAY BETWEEN THE TOP RAIL AND GROUND LEVEL WHEN TOPRAIL IS SPECIFIED AND TWELVE INCHES (12") DOWN FROM TOP OF FABRIC WHEN TOP TENSION WIRE IS SPECIFIED. BRACE RAIL SHALL EXTEND FROM SUCH POST TO THE FIRST ADJACENT LINE POST.

(L) FABRIC: SHALL CONFORM TO THE SPECIFICATIONS.

(M) GATE FRAMES: SHALL BE CONSTRUCTED OF TUBULAR MEMBERS ASSEMBLED BY USE OF HEAVY PRESSED STEEL, MALLEABLE FITTINGS OR BY WELDING. ALL GATES SHALL HAVE ONE HORIZONTAL SUPPORT EXTENDING THE WIDTH OF THE GATE AT THE MIDPOINTS OF VERTICAL FRAME MEMBERS. THE COMPLETE FRAME SHALL BE RIGID AND HAVE AMPLE STRENGTH TO BE FREE FROM SAG AND TWIST.

(O) HINGES: SHALL BE OF HEAVY PATTERN, OF ADEQUATE STRENGTH FOR GATE, AND WITH LARGE BEARING SURFACES FOR CLAMPING IN POSITION. THE HINGE SHALL BE OF THE PROPER TYPE TO ALLOW FOR THE DESIGNATED DEGREE OF SWING. THE HINGE SHALL NOT TWIST OR TURN UNDER THE ACTION OF THE GATE. THE GATES SHALL BE CAPABLE OF BEING OPENED AND CLOSED EASILY BY ONE PERSON.

(P) LATCHES AND STOPS: SHALL BE PROVIDED FOR ALL GATES. GATES SHALL HAVE A DROP BAR LATCH. LATCHES SHALL BE ARRANGED FOR LOCKING. THE STOP FOR DROP BAR LATCHES SHALL BE SET IN CONCRETE AND ENGAGE THE PLUNGER OF THE BAR LATCH.

(S) CAPS: ALL POSTS, EXCEPT ROLL FORMED POSTS AND "T" POSTS SHALL BE CAPPED OVER THE EXTERIOR OF THE POST, AND SHALL CONFORM TO ASTM F626.

CONCRETE REQUIRED FOR THE EMBEDMENT OF ALL POSTS SHALL NOT BE PAID FOR DIRECTLY BUT SHALL BE INCLUDED IN THE CONTRACT UNIT PRICE BID FOR CHAIN LINK FENCE.

POSTS SHALL BE SPACED EQUIDISTANT ON A MAXIMUM OF 10' CENTERS.

EXCAVATION FOR POSTS: IN OTHER THAN ROCK SHALL BE OF THE DIMENSIONS INDICATED. IF ROCK IS ENCOUNTERED BEFORE REACHING THE REQUIRED DEPTH, THE EXCAVATION SHALL BE CONTINUED TO THE DEPTH INDICATED OR 1'-6" INTO THE ROCK, WHICHEVER IS LESS, AND SHALL BE A MINIMUM OF 8 INCHES IN DIAMETER.

| HEIGHT OF FENCE FABRIC | A END, PULL CORNER OR BRACE POST | B LINE POSTS SIZE | B LINE POSTS TIE SPACING | C TOP RAIL SIZE | C TOP RAIL TIE SPACING | C TOP RAIL MIN. LENGTH | D TENSION WIRE SIZE | D TENSION WIRE TIE SPACING | E TENSION BAR SIZE | E TENSION BAR LENGTH | F TENSION BAND SIZE | F TENSION BAND BOLT SIZE | F TENSION BAND SPACING | G BRACE BAND SIZE | G BRACE BAND BOLT SIZE |
|---|---|---|---|---|---|---|---|---|---|---|---|---|---|---|---|
| 6' AND LESS | 2½" O.D. | 2" O.D. | 1 TIE EVERY 1'-2" OF FABRIC HEIGHT | 1⅝" O.D. | 1 TIE EVERY 2'-0" | 10'-0" | 7 GAUGE COIL SPRING WIRE | 1 TIE EVERY 1'-0" | MIN. OF 3/16" X ¾" | MIN. OF 2" LESS THAN FABRIC HEIGHT | MIN. OF ¾" X 0.074 | 5/16" X 1¼" | 1 BAND AT TOP AND BOTTOM 15" MAX. INTERVAL BETWEEN BANDS | MIN. OF ¾" X 0.105 | 5/16" X 1¼" |
| OVER 6' TO 12' INCL. | 3" O.D. | 2½" O.D. | | | | | | | | | | | | | |

| HEIGHT OF FENCE FABRIC | H TIE WIRE | I HOG RING | J BRACE RAIL SIZE | J BRACE RAIL TIE SPACING | K TRUSS ROD | L FABRIC SIZE | L FABRIC MESH | L FABRIC SELVAGE | M GATE FRAME SIZE | M GATE FRAME TIE SPACING | N HORIZONTAL SUPPORT SIZE | N HORIZONTAL SUPPORT TIE SPACING | O HINGE TYPE 180° SWING | T GATE POST GATE WIDTH 12' AND LESS | T GATE POST GATE WIDTH OVER 12' TO 24' INCL. |
|---|---|---|---|---|---|---|---|---|---|---|---|---|---|---|---|
| 6' AND LESS | MIN. OF 12 GA. STEEL OR 9 GA. ALUM. | SAME GAUGE AS FABRIC | 1⅝" O.D. | 1 TIE EVERY 2'-0" | MIN. OF 5/16" ROUND WITH TIGHTNERS AND FITTINGS | 9 GA. | 2" | KNUCK-ING AND/OR TWIST-ING | 2" O.D. | 1 TIE EVERY 1'-0" | 2" O.D. | 1 TIE EVERY 1'-0" | OFFSET | 3" O.D. | 4" O.D. |
| OVER 6' TO 12' INCL. | | | | | | | | | | | | | | 4" O.D. | |

NOTE: POST SIZES SHOWN ARE FOR STEEL. WHERE ALUMINUM IS PROVIDED, LINE POSTS SHALL HAVE AN OUT SIDE DIAMETER OF 2½" FOR FENCE HEIGHT OF 6' AND LESS, AN OUTSIDE DIAMETER OF 3" FOR FENCE HEIGHT OF 6' TO 12'. END, PULL, CORNER OR BRACE POSTS SHALL HAVE AN OUTSIDE DIAMETER OF 3" FOR FENCE HEIGHT OF 6' AND LESS; AN OUTSIDE DIAMETER OF 3½" FOR FENCE HEIGHTS OF 6' TO 12'. GATE POSTS WHERE GATE WIDTH IS 12' AND LESS SHALL HAVE AN OUTSIDE DIAMETER OF 3½" FOR FENCE HEIGHT OF 6' AND LESS. ALUMINUM TENSION WIRE SHALL BE 0.192" IN DIAMETER. MINIMUM THICKNESS OF MATERIAL FROM WHICH EXPANSION SLEEVES SHALL BE MADE WILL BE 0.078". POSTS AND RAILS MAY HAVE ANY CROSS-SECTIONAL SHAPE THAT WILL MEET THE SPECIFICATIONS.

OTHER DETAILS APPLY TO BOTH STEEL AND ALUMINUM FENCE.

ALL MISCELLANEOUS FITTINGS AND HARDWARE SHALL MEET THE REQUIREMENTS AND PRODUCTION TOLERANCES AS SET FORTH IN THE SPECIFICATIONS.
9 GAUGE ALUMINUM WIRE SHALL BE ACCEPTABLE FOR TIEING FABRIC TO TUBULAR AND ROLL FORMED MEMBERS OF STEEL FENCE.

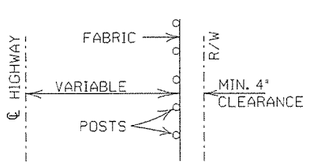


INSTALLATION MAY BE MODIFIED AS SHOWN IN THE PLANS

TYPICAL INSTALLATION DIAGRAM

POSTS AND RAILS

| SIZE O.D. | GRADE 1 AND ALUMINUM ALLOY O.D. INCHES | WALL THICKNESS | LBS. PER LINEAR FT. STEEL | LBS. PER LINEAR FT. ALUMINUM | GRADE 2 O.D. INCHES | WALL THICKNESS | LBS. PER LINEAR FT. |
|---|---|---|---|---|---|---|---|
| 1⅝ | 1.660 | 0.140 | 2.27 | 0.786 | 1.660 | 0.111 | 1.84 |
| 2 | 1.900 | 0.145 | 2.72 | 0.940 | 1.900 | 0.122 | 2.28 |
| 2½ | 2.375 | 0.154 | 3.65 | 1.264 | 2.375 | 0.130 | 3.11 |
| 3 | 2.875 | 0.203 | 5.79 | 2.004 | 2.875 | 0.160 | 4.64 |
| 3½ | 3.500 | 0.216 | 7.58 | 2.621 | 3.500 | 0.160 | 5.71 |
| 4 | 4.000 | 0.226 | 9.11 | 3.151 | 4.000 | 0.160 | 6.56 |

TOLERANCES ON DIMENSIONS AND WEIGHTS ACCORDING TO AASHTO M 181

| DATE | REVISION | FILMED |
|---|---|---|
| 11-17-10 | REVISED TRUSS ROD | |
| 12-10-09 | REVISED POSTS & RAILS TABLE | |
| 5-21-09 | ADDED TABLE & GEN. NOTE (C) | |
| 8-22-02 | REVISED NOTES, REMOVED TABLE, & REMOVED FENCE ALTERNATE | |
| 4-3-97 | REVISED BRACE RAIL NOTE | |
| 10-18-96 | REVISED AASHTO & ASTM REF. | |
| 11-3-94 | REVISED NOTE (L) | |
| 10-1-92 | DELETED ALTERNATE POST | 10-1-92 |
| 8-15-91 | DELETED ROLL FORMED POST DETAIL & ADDED NOTE | 8-15-91 8-15-91 |
| 11-30-89 | DELETED CLASS CONCRETE | 11-30-89 |
| 11-17-88 | REVISED O.D. SIZES | 668-11-17-88 |
| 10-30-87 | GENERAL REVISIONS | 548-10-30-87 |
| 4-20-79 | REVISED TOP RAIL & TENSION WIRE | 695-4-20-79 |
| 10-2-72 | REVISED AND REDRAWN | 530-10-2-72 |

ARKANSAS STATE HIGHWAY COMMISSION

# CHAIN LINK FENCE

STANDARD DRAWING WF-3

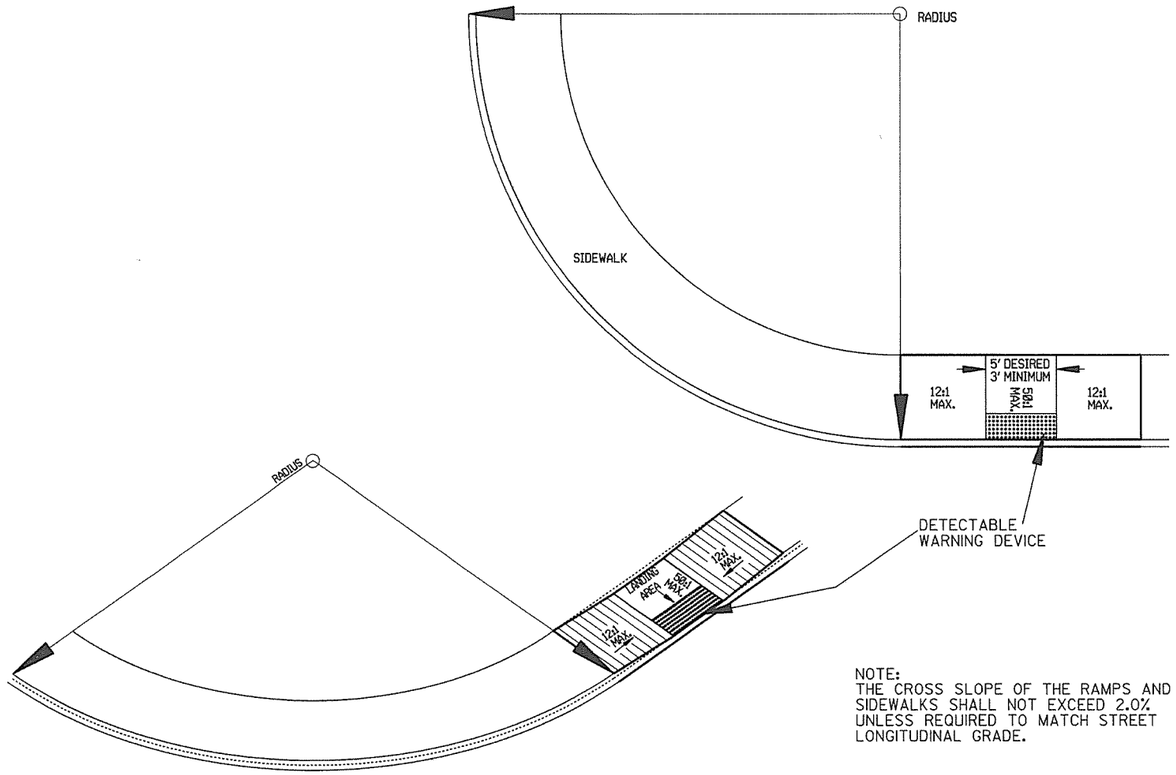


NOTE:
THE CROSS SLOPE OF THE RAMPS AND SIDEWALKS SHALL NOT EXCEED 2.0% UNLESS REQUIRED TO MATCH STREET LONGITUDINAL GRADE.

TYPE 5 RAMP

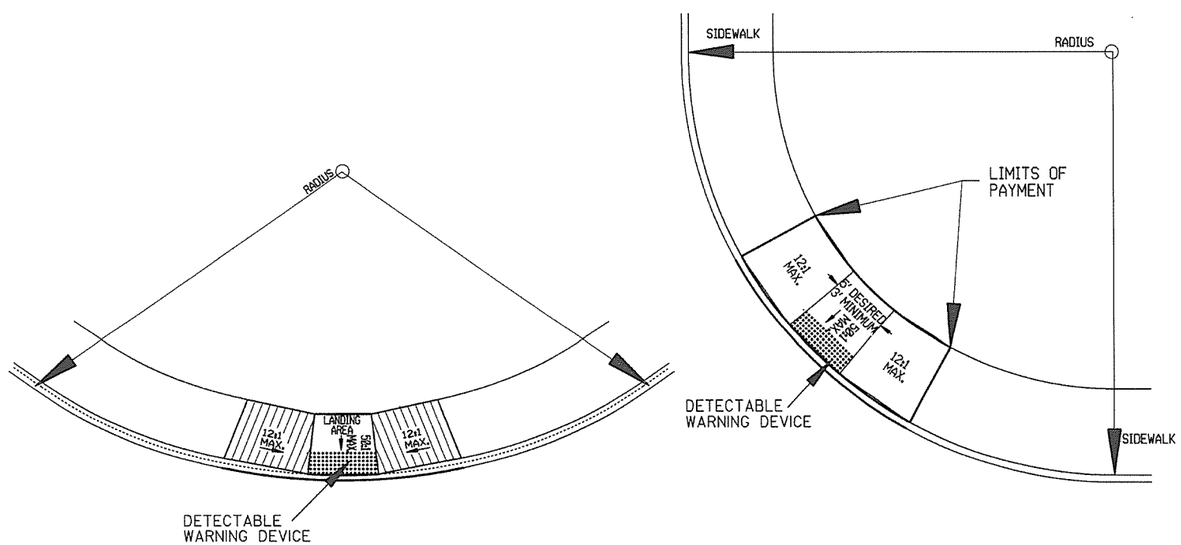


TYPE 6 RAMP

GENERAL NOTES FOR DETECTABLE WARNING DEVICES

THE DETECTABLE WARNING DEVICE SHALL BE LOCATED SO THAT THE NEAREST EDGE OF THE DEVICE IS 6 TO 8 INCHES FROM THE FACE OF THE CURB.
TRUNCATED DOMES IN THE DETECTABLE WARNING SURFACE SHALL MEET THE REQUIREMENTS OF THE GEOMETRIC CONFIGURATION SHOWN.
DOMES SHALL BE ALIGNED ON A SQUARE GRID IN THE PREDOMINANT DIRECTION OF TRAVEL TO PERMIT WHEELS TO ROLL BETWEEN DOMES.
DETECTABLE WARNING DEVICE SHALL BE 24 INCHES IN THE DIRECTION OF TRAVEL AND EXTEND THE FULL WIDTH OF THE CURB RAMP OR FLUSH SURFACE.
DETECTABLE WARNING DEVICE SHALL BE ON THE AHTD QUALIFIED PRODUCTS LIST FOR CAST-IN-PLACE TACTILE PANELS (ADA DETECTABLE WARNING).

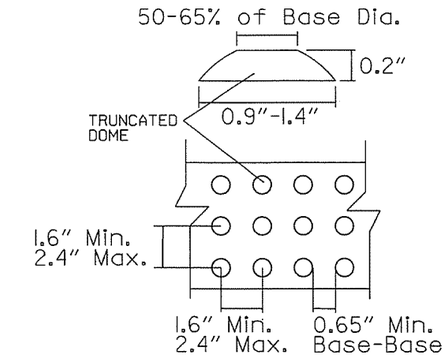


DETECTABLE WARNING DEVICE DETAIL

GENERAL NOTES:

IN ALTERATIONS WHEELCHAIR RAMPS ARE TO BE PROVIDED AT CURBED STREET INTERSECTIONS WITH PEDESTRIAN TRAFFIC AND MID-BLOCK CROSSWALK LOCATIONS.

THE LENGTH OF THE RAMP SHALL BE SUCH THAT THE SLOPE DOES NOT EXCEED 12:1. THE SURFACE TEXTURE OF THE RAMP SHALL CONFORM TO A CLASS 6 FINISH ACCORDING TO SECTION 802.19.

THE NORMAL GUTTER GRADE SHALL BE MAINTAINED THROUGH THE AREA OF THE RAMP.
ALL PAVEMENT MARKINGS SHALL BE IN ACCORDANCE WITH THE LATEST EDITION OF THE MANUAL OF UNIFORM TRAFFIC CONTROL DEVICES PUBLISHED BY THE FEDERAL HIGHWAY ADMINISTRATION.
THE MINIMUM THICKNESS OF THE RAMP, WALK, & LANDING SHALL BE 4".
THE MINIMUM WIDTH OF THE RAMPS SHALL BE THE EXISTING WALK WIDTH OR 36", WHICHEVER IS GREATER.
MINOR MODIFICATIONS OF THESE DETAILS, AS APPPROVED BY THE ENGINEER, MAY BE MADE TO ADJUST TO LOCAL CONDITIONS.

RAMP SELECTION CRITERIA

| | | |
|---|---|---|
| FIRST CHOICE | TYPE 1 | CORNER LOCATIONS WITH THE WALK ADJACENT TO THE CURB (BOTH NEW CONSTRUCTION AND ALTERATIONS). |
| | TYPE 2 | CORNER LOCATIONS WITH THE WALK OFFSET FROM THE CURB A DISTANCE INSUFFICIENT TO ALLOW THE REQUIRED RAMP SLOPE (BOTH NEW CONSTRUCTION AND ALTERATIONS). |
| | TYPE 3 | CORNER LOCATIONS WITH THE WALK OFFSET FROM THE CURB A DISTANCE SUFFICIENT TO ALLOW THE REQUIRED RAMP SLOPE (BOTH NEW CONSTRUCTION AND ALTERATIONS). |
| | TYPE 4 | TANGENT LOCATIONS (BOTH NEW CONSTRUCTION AND ALTERATIONS). |
| SECOND CHOICE | TYPE 5 | TANGENT LOCATIONS (ALTERATIONS ONLY). |
| THIRD CHOICE | TYPE 6 | CORNER LOCATIONS (ALTERATIONS ONLY). THIS RAMP MAY BE USED ONLY IF THE TYPE 5 RAMPS CANNOT BE PLACED AT THE ENDS OF THE RADIUS. |
| FOURTH CHOICE | | IF SITE CONSTRAINTS PREVENT THE CONSTRUCTION OF ANY OF THE TYPES LISTED, THEN AND ONLY THEN CAN THE 12:1 MAX. SLOPE ON THE RAMP BE EXCEEDED TO PROVIDE ACCESS TO THE STREET LEVEL (ALTERATIONS ONLY). THE SLOPE CAN BE STEEPENED TO A 10:1 MAX. FOR A MAX. LENGTH OF 5' OR A 8:1 MAX. FOR A MAX. LENGTH OF 2'. SLOPES STEEPER THAN 8:1 ARE NOT ALLOWED UNDER ANY CIRCUMSTANCES. |

NOTE: IN ALTERATIONS, THE SELECTION OF THE TYPE OF WHEELCHAIR RAMP TO BE CONSTRUCTED SHALL BE BASED ON THE AMOUNT OF RIGHT-OF-WAY AVAILABLE, AND ON THE PRESENCE OF OTHER SITE CONSTRAINTS (UTILITIES, BUILDINGS, ETC.).
THE TABLE ABOVE LISTS THE ORDER IN WHICH THE RAMPS ARE TO BE CONSIDERED.

AN ALTERATION IS DEFINED AS A PROJECT THAT CHANGES OR AFFECTS THE USE OF A PEDESTRIAN PATHWAY (OVERLAYS, SIGNALIZATION PROJECTS, ETC.) BUT DOES NOT REQUIRE THE PURCHASE OF ADDITIONAL RIGHT-OF-WAY. ALL PROJECTS THAT REQUIRE THE PURCHASE OF ADDITIONAL RIGHT-OF-WAY WILL USUALLY BE CONSIDERED NEW CONSTRUCTION FOR THE PURPOSES OF THE CHART ABOVE.

| DATE | REVISION | DATE FILM |
|---|---|---|
| 10-9-03 | REVISED GENERAL NOTES & ADDED NOTE. | 10-09-03 |
| 4-10-03 | REVISED DETECTABLE WARNING DEVICE DETAIL | |
| 8-22-02 | ADDED DETECTABLE WARNING DEVICES DETAILS | |
| 11-18-98 | REV. FOURTH CHOICE NOTE | |
| 8-12-98 | REVISED TEXTURE | |
| 7-02-98 | ISSUED | |

ARKANSAS STATE HIGHWAY COMMISSION

WHEELCHAIR RAMPS
ALTERATIONS ONLY

STANDARD DRAWING WR-2

# ABBREVIATIONS

& - AND
∠ ANGLE
@ - AT
A.B. - ANCHOR BOLT
A/C - AIR CONDITIONING
AC., ACOUS. - ACOUSTICAL - ACOUST.
ACT - ACOUSTICAL CEILING TILE
AT - ACOUSTICAL TILE
ADJ., - ADJUST - ADJUSTABLE
A.F.F. - ABOVE FLOOR FINISH
AL. - ALUM. - ALUMINUM
ALT. - ALTERNATE
AP. - ACCESS PANEL
APPROX. - APPROXIMATELY

B., BOT - BOTTOM
BD. - BOARD
BITUM - BITUMINOUS
BL. - BUILDING LINE
BLDG. - BUILDING
BLK. - BLOCK, BLKG. - BLOCKING
BM., B.M. - BEAM, BENCH MARK
B.O.F. - BOTTOM OF FOOTING
BOT. - BOTTOM
B.P. - BASE PLATE
BR. - BEDROOM
BRKT. - BRACKET
B.S. - BOTH SIDES
B/U., B.U. - BUILT UP
B.W. - BOTH WAYS

[ - CHANNEL
CL - CENTERLINE
CAB. - CABINET
CAP. - CAPACITY
CEM. - CEMENT
CER. - CERAMIC
C.F./C.I. - CONTRACTOR FURNISHED/ CONTRACTOR INSTALLED
C.H. - COAT HOOK
CHAM. - CHAMFER
CHAN. - CHANNEL
C.I. - CAST IRON
C.I.P. - CAST IRON PIPE
C.J. - CONTROL JOINT
C.L. - CENTER LINE
CLR. - CLEAR, COLOR
CLEAN'G. - CLEANING
CLG. - CEILING
CLK. - CLOCK
CLKG. - CAULKING
C.M.U. - CONCRETE MASONRY UNIT
C.O. - CLEANOUT
COL. - COLUMN
CONC. - CONCRETE
CONST. - CONSTRUCTION
CONT. - CONTINUOUS
CONTR. - CONTRACT (OR CONTRACTION)
CPT. - CARPET
C.T. - CERAMIC TILE
CTG. - COATING
C.W. - COLD WATER

DET. - DETAIL
DIA. - DIAMETER
DIAG. - DIAGONAL, DIAGRAM
DIM. - DIMENSION
DISP. - DISPENSER
D.L. - DEAD LOAD
DN. - DOWN
DR. - DOOR
D.S. - DOWNSPOUT
DBL. - DOUBLE

EA. - EACH
E.F. - EACH FACE
E.J., EXP. JT. - EXPANSION JOINT
EL. - ELEVATION
ELAST. - ELASTOMERIC
ELEC. - ELECTRICAL
ELEV. - ELEVATION "VIEW", ELEVATOR
EQ. - EQUAL
EQUIP. - EQUIPMENT
E.W. - EACH WAY
E.W.C. - ELECTRIC WATER COOLER
E.W.H. - ELECTRIC WATER HEATER
EXH. - EXHAUST
EXIST. - EXISTING
EXP. - EXPANSION
EXT. - EXTERIOR

F.A. - FRESH AIR
F.A.P. - FIRE ALARM PANEL
F.C.U. - FAN COIL UNIT
F.D. - FLOOR DRAIN, FIRE DAMPER
FDN., FOUND - FOUNDATION
F.E. - FIRE EXTINGUISHER
F.E.C. - FIRE EXTINGUISHER CABINET
FED. - FEDERAL
F.F.EL. - FINISH FLOOR ELEVATION
F.G. - FINISH GRADE
F.H.C. - FIRE HOSE CABINET
FIG. - FIGURE
FIN. - FINISH (ED) (ES)
FL., FLR. - FLOOR
FL., FLASH'G - FLASHING
FLUOR. - FLUORESCENT
F.O.B. - FACE OF BRICK
FR. - FRAME
FT. - FOOT, FEET, FT. - SQ. FT.
FTG. - FOOTING
FUR. - FURNACE
FURN. - FURNITURE
FURRG. - FURRING

G - GAS
G.A. - GAGE
GALV. - GALVANIZED, GALVD. - GALVANIZED
G.B. - GRAB BARS - GYPSUM WALLBOARD
GL., - GLASS
GF/CI - GOVERNMENT FURNISHED/CONTRACTOR INSTALLED
GF/GI - GOVERNMENT FURNISHED/GOVERNMENT INSTALLED
GR. - GRADE
GRD. - GROUND
G.T. - GREASE TRAP
G.W.B. - GYPSUM WALL BOARD
GYP. - GYPSUM
GYP. BD. - GYPSUM BOARD
G.B. - GYPSUM BOARD
GAL. - GALLON

H., HGT., HT. - HEIGHT
H.B. - HOSE BIBB
H.M. - HOLLOW METAL
HORIZ. - HORIZONTAL
HR. - HOUR
HTG. - HEATING
H.W. - HOT WATER
HW., HDW., H'DWARE - HARDWARE
HDWE. - HARDWARE

I.D. - INSIDE DIAMETER, INSIDE DIMENSION, IDENTIFICATION
IN. - INCH
INS., INSUL. - INSULAT (ION), (ED)
INT. - INTERIOR
INV. - INVERT

JAN. - JANITOR'S CLOSET
JT. - JOINT
JST. - JOIST
JSTS. - JOISTS
K.O. - KNOCKOUT
K.P.L. - KICK PLATE

L. - ANGLE
LOUV., LVR. - LOUVRE (R), (RED)
LAV. - LAVATORY
LBS. - POUNDS, LB. - POUND
LG. - LONG, LENGTH
L.H. - LEFT HAND
L.L. - LIVE LOAD
LT. - LIGHT
LTG. - LIGHTING

m - METER
mm - MILLIMETER
MACH. - MACHINE
MAINT. - MAINTENANCE
MAS. - MASONRY
MAT., MAT'L - MATERIAL
MAX. - MAXIMUM
M.C. - MEDICINE CABINET
M.D.P. - MAIN DISTRIBUTION PANEL
MECH. - MECHANICAL, MECHL. - MECHANICAL
MEZZ. - MEZZANNE
MET., MAT'L - METAL
MFR. - MANUFACTURER, MFG. - MANUFACTURER
MFRD. - MANUFACTURED
M.G. - MIRROR GLASS
J.H. - MANHOLE
MIN. - MINIMUM, MINUTE
MISC. - MISCELLANEOUS
MK. - MARK
M.O. - MASONRY OPENINGS
M.T. - METAL THRESHOLD
MULL. - MULLION
M.W.P. - MEMBRANE WATERPROOFING

N. - NORTH
N.C. - NON-CORROSIVE
N.I.C. - NOT IN CONTRACT
NO. - NUMBER
NOM. - NOMINAL
N.T.S. - NOT TO SCALE

O.A. - OUTSIDE AIR
O.C. - ON CENTER (S)
O.C.E.W. - ON CENTER EACH WAY
O.D. - OUTSIDE DIAMETER
OFF. - OFFICE
O.H. - OVERHEAD, OPPOSITE HAND
OHE - OVERHEAD ELECTRIC
O.J. - OPEN JOISTED
OP'G., OPNG. - OPENING
OPP. - OPPOSITE
O.R. - OUTSIDE RADIUS
OZ. - OUNCES

P. - POLE, PHASE, PIPE
PARA. - PARAGRAPH
PART (N) - PARTITION, PTN. - PARTITION
PCT. - PERCENT
P. LAM - PLASTIC LAMINATE
PL., P - PLATE, PLACE
PLAS. - PLASTER, PLAST., - PLASTER
PLAS. LAM. - PLASTIC LAMINATE
PLYWD. - PLYWOOD
PNL. - PANEL, PNLS. - PANELS
PR. - PAIR
PREC. - PRECAST
PRELIM. - PRELIMINARY
P.S.F. - POUNDS PER SQUARE FOOT
P.S.I. - POUNDS PER SQUARE INCH
P.T.D. - PAPER TOWEL DISPENSER

QTR. - QUARTER
QTY. - QUANTITY

R. - RADIUS, RISER
R.A. - RETURN AIR
RAD. - RADIUS
R.A.G. - RETURN AIR GRILLE
R.C.P. - REINFORCED CONCRETE PIPE
R.D. - ROOF DRAIN
RECP. - RECEPTACLE
REF. - REFERENCE
REG. - REGULATOR, REGISTER
REINF. - REINFORCE (D), (MENT)
REQ'D. - REQUIRED
RES. - RESILIENT TILE
RESIL. - RESILIENT
RET. - RETAINING
REV. - REVISION
R.H. - ROUND HEAD, ROUND HOLE, ROBE HOOK, RIGHT HAND
RM.(S) - ROOM (S)
R.O. - ROUGH OPENING

SAN. - SANITARY
S.B. - SPLASH BLOCK
S.C. - SOLID CORE, SHOWER CURTAIN
SCH., SCHED. - SCHEDULE
SCR., S.C.R. - SCREEN, SHOWER CURTAIN RAIL
S.D. - SOAP DISPENSER
SECT. - SECTION
SEP. - SEPARATE
SERV. - SERVICE
S.G. - SEMI GLOSS
S.G.R. - SOAP AND GRAB BAR COMBINATION ON (RECESSED)
S.G.S. - SOAP AND GRAB BAR COMBINATION (SURFACE)
S.H. - SOAP HOLDER
SH. - SHEET
SHV. - SHELF, SHELVES
SIM. - SIMILAR
S.N.D. - SANITARY NAPKIN DISPENSER
S.N.T.D. - SANITARY NAPKIN & TAMPON DISPOSER
SP. - SPACES
SPEC. (S) - SPECIFICATIONS
SQ. - SQUARE
S.S. - SANITARY SEWER, STAINLESS STEEL
STA. - STATION
STC - SOUND TRANSMISSION CLASS
STL. - STEEL
STOR., ST. - STORAGE
STD. - STANDARD
STRUCT. - STRUCTURAL - STRUCT'L
STS - STORM SEWER
SUS., SUSP. - SUSPENDED
SYM. - SYMBOL
SYS. - SYSTEM
SHT. - SHEET
SSMR - STANDING SEAM METAL ROOF

T. - TILE, TOP, TANGENT, TREAD, TOILET, TELEPHONE
T & B - TOP AND BOTTOM
T & G - TONGUE AND GROOVE
T.B. - TOWEL BAR
T.C. - TOP OF CURB
T.D. - TILE DRAIN
TEL. - TELEPHONE
TEMP. - TEMPERATURE, TEMPORARY, TEMPERED
THK. - THICK
THRSLD. - THRESHOLD
T.O.B. - TOP OF BEAM
T.O.M. - TOP OF MASONRY
T.O.S. - TOP OF STEEL
T.S. - TOP OF STEEL, TOP OF STONE
T.T.D. - TOILET TISSUE DISPENSER
T.V.B. - TELEVISION BRACKET
T.W. - TOP OF WALL
TYP. - TYPICAL

U.G. - UNDERGROUND
UGT - UNDERGROUND TELEPHONE
U.H. - UNIT HEATER
U.N.O. - UNLESS NOTED OTHERWISE

V. - VENT
V.C.T. - VINYL COMPOSITION TILE
VENT. - VENTILATING
VERT. - VERTICAL (LY)
VEST. - VESTIBULE
V.T.R. - VENT THROUGH ROOF
V.W.C. - VINYL WALL COVERING

W/ - WITH
W/O - WITHOUT
W. - WIDTH, WATER
WAINS. - WAINSCOT
W.C. - WATER CLOSET
W.D. - WOOD DOOR, WINDOW DIMENSION, WOOD
W.I.F.S. - WALL INSUL. & FINISH SYSTEM (S)
WDW. - WINDOW
W.G. - WIRE GLASS
W.P. - WATERPROOF, WEATHERPROOF
WT. - WEIGHT
WTR. - WATER
W.W.F. - WELDED WIRE FABRIC
W.M.P. - WIRE MESH PARTITION

# MATERIAL LEGEND

COMPACTED FILL
EARTH (EXISTING GRADE)
STONE, RUBBLE, GRAVEL
CONCRETE
BRICK
CONCRETE MASONRY UNIT
THERMAL INSULATION
ACOUSTICAL MATERIAL
BATT INSULATION
RIGID INSULATION
SAND
WOOD (FINISH)
METAL
WOOD (DIMENSIONED LUMBER AND BLOCKING)
PLASTER, CEMENT AND GROUT
PLYWOOD
FIRE RATED GYPSUM BOARD CEILING

# GENERAL NOTES

A. EACH TRADE IS ADVISED THAT INFORMATION PERTINENT TO ITS WORK MAY OCCUR IN VARIOUS SECTIONS OF THE CONTRACT DOCUMENTS. REFER TO EVERY SHEET OF DRAWINGS FOR NOTES, ABBREVIATIONS AND SYMBOLS. NOTES SHALL BE REVIEWED AND APPLIED TO RELATED BUILDING COMPONENTS REGARDLESS OF THEIR LOCATIONS IN THE DRAWINGS AND SPECIFICATIONS.

B. UNLESS NOTED OTHERWISE, ANY NOTE, DETAILS, OR FEATURE INDICATED FOR ONE CONDITION SHALL BE APPLICABLE FOR ALL ALIKE AND SIMILAR CONDITIONS.

C. THE CONTRACTOR SHALL FURNISH AND INSTALL ALL STIFFENERS, BRACING, BACKING PLATES AND SUPPORTING BRACKETS REQUIRED FOR THE PROPER INSTALLATION OF ALL BUILDING COMPONENTS AS RECOMMENDED BY THE MANUFACTURER AND REQUIRED BY CODE.

D. ALL DISSIMILAR METALS SHALL BE EFFECTIVELY ISOLATED FROM EACH OTHER TO AVOID MOLECULAR BREAKDOWN.

E. ALL EXTERIOR JOINTS AROUND WINDOW AND DOOR FRAMES, BETWEEN WALLS AND FOUNDATION, BETWEEN WALLS AND ROOF, BETWEEN WALL PANELS, AT PENETRATION OF UTILITIES THROUGH THE ENVELOPE, SHALL BE SEALED OR WEATHER-STRIPPED TO PREVENT AIR AND MOISTURE LEAKAGE AND INFILTRATION.

F. INTERIOR PARTITIONS ARE DIMENSIONED TO FACE OF STUD, UNLESS NOTED OTHERWISE. DO NOT SCALE DRAWINGS. QUESTIONS REGARDING DIMENSIONS SHALL BE REPORTED TO ARCHITECT.

# DRAFTING SYMBOLS

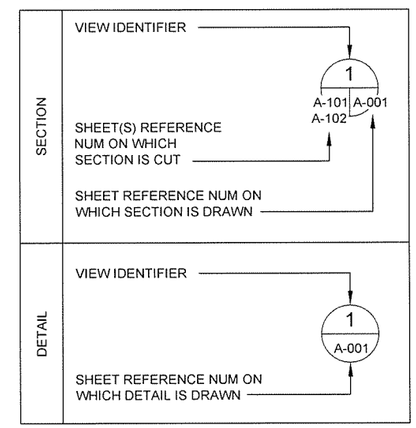


## REFERENCE SYMBOLS

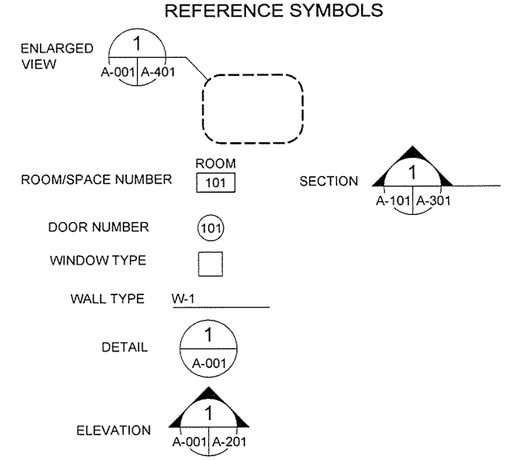



GARVER
4701 Northshore Drive
N Little Rock, AR 72118
501-376-3633
www.GarverUSA.com


REGISTERED ARCHITECT
Garver, LLC
License No. LL111
STATE OF ARKANSAS

REGISTERED ARCHITECT
Greg A. Archer
License No. 2671
10/1/15
STATE OF ARKANSAS

| Date | Description | Appr. |
|---|---|---|
| 10/1/15 | ISSUED FOR CONSTRUCTION | JRR |

| Symbol | Description | Date | Appr. |
|---|---|---|---|
| | | | |

Designed by J RAMSEY
Drawn by J RAMSEY
Checked by G ARCHER
Submitted by John T. Watkins, III, PE, SE Director / Federal Services
Plot Date 10/1/15
Plot Scale 1:1
Drwg Code -
File Name AH15VR-A-001 DWG
Job Number 060451
N/A -
N/A -
N/A -

ARKANSAS HIGHWAY AND TRANSPORTATION DEPARTMENT
ARKANSAS TOURIST INFORMATION CENTER
(WHITE RIVER) (S)
JOB 061451

GENERAL NOTES & LEGEND

Sheet Reference Number:
A-001

## AHTD TOURIST INFORMATION CENTER ROOM FINISH SCHEDULE

| RM NO. | ROOM NAME | FLOOR MAT | BASE MAT | WALL (NORTH) MAT | WALL (NORTH) FIN | WALL (EAST) MAT | WALL (EAST) FIN | WALL (SOUTH) MAT | WALL (SOUTH) FIN | WALL (WEST) MAT | WALL (WEST) FIN | CEILING MAT | CEILING FIN | HEIGHT | REMARKS (SEE NOTES BELOW) |
|---|---|---|---|---|---|---|---|---|---|---|---|---|---|---|---|
| **TOURIST INFORMATION CENTER** | | | | | | | | | | | | | | | |
| 101 | LOBBY | T1 | T2 | TILE | T2 | TILE | T2 | STORE FRONT | N/A | TILE | T2 | GYP BD | PT5 | 18' - 0" (+-) | |
| 102 | VENDING | T1 | T2 | TILE | T2 | TILE | T2 | TILE | T2 | TILE | T2 | GYP BD | PT5 | 18 '- 0" (+-) | |
| 103 | CHASE | CONC/CS1 | NONE | CMU | EXPOSED | CMU | EXPOSED | CMU | EXPOSED | CMU | EXPOSED | EXPOSED | NONE | N/A | |
| 104 | WOMEN | CONC | ECS3 | CMU | ECS1,ECS2 | CMU | ECS1,ECS2 | CMU | ECS1,ECS2 | CMU | ECS1,ECS2 | GYP BD | ECS4 | 9' - 1 7/8" | VARIES AT VAULTED CLG |
| 105 | CHASE | CONC/CS1 | NONE | CMU | PT1 | CMU | PT1 | CMU | PT1 | CMU | PT1 | EXPOSED | NONE | N/A | |
| 106 | MEN | ECS3 | ECS3 | CMU | ECS1,ECS2 | CMU | ECS1,ECS2 | CMU | ECS1,ECS2 | CMU | ECS1,ECS2 | GYP BD | ECS4 | 9' - 1 7/8" | VARIES AT VAULTED CLG |
| 107 | CHASE | CONC/CS1 | NONE | CMU | PT1 | CMU | PT1 | CMU | PT1 | CMU | PT1 | EXPOSED | NONE | N/A | |
| 108 | CORRIDOR | T1 | N/A | CMU | WV1 | CMU | T2 | CMU | WV1 | CMU | WV1 | GYP BD | PT4 | 9' - 1 7/8" | |
| 109 | CORRIDOR | T1 | N/A | CMU | WV1 | CMU | WV1 | CMU | WV1 | CMU | T2 | GYP BD | PT4 | 9' - 1 7/8" | |
| 110 | CHASE | CONC/CS1 | NONE | CMU | WV1 | CMU | PT1 | CMU | PT1 | CMU | PT1 | EXPOSED | NONE | N/A | |
| 111 | MEN | ECS3 | ECS3 | CMU | ECS1,ECS2 | CMU | ECS1,ECS2 | CMU | ECS1,ECS2 | CMU | ECS1,ECS2 | GYP BD | ECS4 | 9' - 1 7/8" | VARIES AT VAULTED CLG |
| 112 | CHASE | CONC/CS1 | NONE | CMU | PT1 | CMU | PT1 | CMU | PT1 | CMU | PT1 | EXPOSED | NONE | N/A | |
| 113 | COMM | CONC | NONE | CMU | PT1 | CMU | PT1 | CMU | PT1 | CMU | PT1 | GYP BD | PT4 | 9' - 1 7/8" | |
| 114 | WOMEN | ECS3 | ECS3 | CMU | ECS1,ECS2 | CMU | ECS1,ECS2 | CMU | ECS1,ECS2 | CMU | ECS1,ECS2 | GYP BD | ECS4 | 9' - 1 7/8" | VARIES AT VAULTED CLG |
| 115 | CHASE | CONC/CS1 | NONE | CMU | PT1 | CMU | PT1 | CMU | PT1 | CMU | PT1 | EXPOSED | NONE | N/A | |
| **MAINTENANCE BUILDING** | | | | | | | | | | | | | | | |
| 201 | MAINTENANCE | CONC/CS1 | NONE | CMU | PT1 | CMU | PT1 | CMU | PT1 | CMU | PT1 | GYP BD | PT4 | 9' - 10 1/2" | |
| 202 | FLAM. STORAGE | CONC/CS1 | NONE | CMU | PT1 | CMU | PT1 | CMU | PT1 | CMU | PT1 | GYP BD | PT4 | 9' - 10 1/2" | |
| **TRUCKER- VENDING BUILDING** | | | | | | | | | | | | | | | |
| 301 | WOMEN | ECS3 | ECS3 | CMU | ECS1,ECS2 | CMU | ECS1,ECS2 | CMU | ECS1,ECS2 | CMU | ECS1,ECS2 | GYP BD | ECS4 | 9' - 10 1/2" | |
| 302 | CHASE | CONC/CS1 | NONE | CMU | PT1 | CMU | PT1 | CMU | PT1 | CMU | PT1 | EXPOSED | NONE | N/A | |
| 303 | MEN | ECS3 | ECS3 | CMU | ECS1,ECS2 | CMU | ECS1,ECS2 | CMU | ECS1,ECS2 | CMU | ECS1,ECS2 | GYP BD | ECS4 | 9' - 10 1/2" | |
| 304 | VENDING | N/A | N/A | N/A | N/A | N/A | N/A | N/A | N/A | N/A | N/A | N/A | N/A | N/A | |
| 305 | COVERED ENTRY | N/A | N/A | N/A | N/A | N/A | N/A | N/A | N/A | N/A | N/A | N/A | N/A | N/A | |

## AHTD TOURIST INFORMATION CENTER EXTERIOR MATERIAL FINISH AND COLOR LEGEND

| SYMBOL | MATERIAL | *BASIS OF DESIGN MANUFACTURER | MODEL NO. SIZE | MODEL NAME | COLOR |
|---|---|---|---|---|---|
| EPT1 | HM DOOR PAINT | SHERWIN WILLIAMS | N/A | PRO INDUSTRIAL ACRYLIC | DORIAN GRAY SW 7019 |
| EPT2 | HM DOOR FRAME PAINT | SHERWIN WILLIAMS | N/A | PRO INDUSTRIAL ACRYLIC | RIPE OLIVE SW 6209 |
| SW1 | MANUFACTURED STONE WAINSCOT | ARRISCRAFT | VARIES | OLD COUNTRY | SMOKEY MOUNTAIN |
| SW2 | MANUFACTURED STONE ACCENT CAP | ARRISCRAFT | 6-1/2"x4-5/8" - SEE DETAIL 2/A-006 | OLD COUNTRY | GRAY |
| GL1 | GLAZING | PPG | N/A | SOLARBAN 60 | SOLARGRAY |
| GL2 | GLAZING-OBSCURE | PPG | N/A | SOLARBAN 60 | SOLARGRAY |
| MOR1 | MORTAR FOR STONE WAINSCOT/WALL | LAFARGE | GRAY | TYPE N PORTLAND | NATURAL GRAY |
| OHD1 | OVERHEAD SECTIONAL DOOR | OVERHEAD DOOR | SERIES 418 | SERIES 418 FLUSH | WHITE |
| MT1 | METAL TRIM. FASCIA | BERRIDGE | N/A | N/A | HARTFORD GREEN |
| MT2 | METAL TRIM. PANEL | CENTRIA | IW-10A | FLUOROFINISH (PVDF) | 133 SANDSTONE |
| MS1 | METAL SIDING | BERRIDGE | 12" PANEL; 24 GA. | HS-12 | PARCHMENT |
| RP1 | ROOF PANEL | BERRIDGE | 16" PANEL, 24 GA. | DOUBLE ZEE-LOCK | HARTFORD GREEN |
| SF1 | ALUMINUM STOREFRONT | EFCO | 8" X 2-1/2" | 5600 SERIES | CLEAR ANODIZED |
| SP1 | METAL SOFFIT PANEL- PERFORATED | BERRIDGE | 12 PANEL, 24 GA | FW-12- VENTED | HARTFORD GREEN |
| VG1 | VENDING GATE | SHERWIN WILLIAMS | N/A | PRO INDUSTRIAL ACRYLIC | URBAN BRONZE 7048 |
| WD1 | ALUMINUM WINDOWS | EFCO | 5" x 2-1/2" | 5600 SERIES | CLEAR ANODIZED |
| | | * OR APPROVED EQUAL | | | |

## AHTD TOURIST INFORMATION CENTER MATERIAL FINISH AND COLOR LEGEND

| SYMBOL | MATERIAL | *BASIS OF DESIGN MANUFACTURER | MODEL NO. SIZE | MODEL NAME | COLOR |
|---|---|---|---|---|---|
| CS1 | CONCRETE SEALER | H&C | N/A | HIGH PERFORMANCE | CLEAR |
| ECS1 | COATING SYSTEM-WALL | NOTE 1. | NOTE 1. | NOTE 1. | NOTE 1. |
| ECS2 | COATING SYSTEM-WALL | NOTE 1. | NOTE 1. | NOTE 1. | NOTE 1. |
| ECS3 | COATING SYSTEM-FLOOR | NOTE 1. | NOTE 1. | NOTE 1. | NOTE 1. |
| ECS4 | COATING SYSTEM-CEILING | NOTE 1. | NOTE 1. | NOTE 1. | NOTE 1. |
| G1 | FLOOR GROUT | CUSTOM BUILDING PROD | N/A | FUSION | TRUFFLE #540 |
| G2 | WALL GROUT | CUSTOM BUILDING PROD | N/A | FUSION | DRIFTWOOD #543 |
| PT1 | WALL PAINT | SHERWIN WILLIAMS | N/A | PRO INDUSTRIAL ACRYLIC | DORIAN GRAY SW 7017 |
| PT2 | HM DOOR PAINT | SHERWIN WILLIAMS | N/A | PRO INDUSTRIAL ACRYLIC | GAUNTLET GRAY SW 7019 |
| PT3 | HM FRAME PAINT | SHERWIN WILLIAMS | N/A | PRO INDUSTRIAL ACRYLIC | URBAN BRONZE SW 7048 |
| PT4 | CEILING PAINT | SHERWIN WILLIAMS | N/A | PRO INDUSTRIAL ACRYLIC | ROCK CANDY SW 6231 |
| PT5 | CEILING PAINT | SHERWIN WILLIAMS | N/A | PRO INDUSTRIAL ACRYLIC | URBAN BRONZE SW 7048 |
| PT6 | METAL DOOR & FRAME PAINT | SHERWIN WILLIAMS | N/A | PRO INDUSTRIAL ACRYLIC | URBAN BRONZE SW 7048 |
| T1 | FLOOR TILE | DALTILE | 8" x 48" | IMAGICA | MIDNIGHT IG98 |
| T2 | FLOOR TILE | DALTILE | 4" x 48" | IMAGICA | MIDNIGHT IG98 |
| T3 | WALL TILE | DALTILE | 12" x 24" | EXHIBITION | STARK WHITE EX01 |
| T4 | WALL TILE | DALTILE | 12" x 24" | EXHIBITION | MODE BEIGE EX06 |
| T5 | WALL TILE | DALTILE | 12" x 24" | EXHIBITION | TAILOR BEIGE EX07 |
| TP1 | TOILET PARTITION DOOR | SCRANTON | HDPE | HINY HIDERS | SHALE |
| TS1 | TRANSITION STRIP | SCHLUETER | N/A | SCHIENE | CLEAR ANODIZED |
| TS2 | TRANSITION STRIP | SCHLUETER | N/A | RENO-U | CLEAR ANODIZED |
| WV1 | WALL VINYL | NOTE 2. | NOTE 2. | NOTE 2. | NOTE 2. |
| | | *OR APPROVED EQUAL | | | |

**MATERIAL AND FINISH COLOR LEGEND NOTES:**

1.) FLOOR, WALL AND CEILING COATING SYSTEM, SEE ALLOWANCE NO. 3, SECTION 012100 ALLOWANCES

2.) WALL VINYL, SEE ALLOWANCE NO. 1; SECTION 012100 - ALLOWANCES


GARVER
4701 Northshore Drive
N Little Rock, AR 72118
501-376-3633
www.GarverUSA.com


REGISTERED ARCHITECT Garver, LLC License No. LL111 STATE OF ARKANSAS

REGISTERED ARCHITECT Greg A. Archer License No. 2671 STATE OF ARKANSAS

| Symbol | Description | Date | Appr. |
|---|---|---|---|
| IFC | ISSUED FOR CONSTRUCTION | 10/1/15 | JRR |

Job Number 060451

Submitted by John T. Watkins, III, PE, SE Director, Expert Services

Plot Date 10/1/15 | Plot Scale 1:1

Designed by J RAMSEY | Drawn by J RAMSEY | Checked by G ARCHER

Dwg Code: N/A | N/A

File Name: AH15VR-A-002.DWG

ARKANSAS HIGHWAY AND TRANSPORTATION DEPARTMENT
ARKANSAS TOURIST INFORMATION CENTER
(WHITE RIVER) (S)
JOB 061451

FINISH SCHEDULE AND MATERIAL LEGENDS

Sheet Reference Number:

A-002

# AHTD TOURIST INFORMATION CENTER - WHITE RIVER - DOOR AND FRAME SCHEDULE

| DR NO. | ROOM NAME | RM NO. | SIZE | DR TYPE | DOOR MAT | DOOR FIN | FRAME TYPE | FRAME MAT | FRAME FIN | DETAILS HEAD | DETAILS JAMB | DETAILS SILL | STC | ATFP | FIRE LABEL | UNDE RCUT | EXIT HDW | HDW SET | REMARKS |
|---|---|---|---|---|---|---|---|---|---|---|---|---|---|---|---|---|---|---|---|
| **TOURIST INFORMATION CENTER** | | | | | | | | | | | | | | | | | | | |
| 101A | LOBBY | 101 | 6'0" x 8'0" | A | ALUM | SF1 | A | ALUM | SF1 | 2/A-005 | 3/A-005 | 4/A-005 | N/A | N/A | N/A | N/A | N/A | 1 | |
| 101B | LOBBY | 101 | 7'4" x 8'0" | F | MTL | PT6 | E | MTL | PT6 | 11/A-005 | N/A | N/A | N/A | N/A | N/A | N/A | N/A | 3 | SLIDING GATE, SEE DOOR NOTE #1 |
| 101C | LOBBY | 101 | 7'4" x 8'0" | F | MTL | PT6 | E | MTL | PT6 | 11/A-005 | N/A | N/A | N/A | N/A | N/A | N/A | N/A | 3 | SLIDING GATE, SEE DOOR NOTE #1 |
| 102A | VENDING | 102 | 3'0" x 7'0" | B | ALUM | SF1 | B | ALUM | SF1 | 6/A-007 | 5/A-007 | 8/A-007 | N/A | N/A | N/A | N/A | N/A | 2 | |
| 102B | VENDING | 102 | 4'4-1/4" x 7'0" | H | MTL | PT6 | N/A | MTL | PT6 | N/A | N/A | N/A | N/A | N/A | N/A | N/A | N/A | 5 | SWING GATE, SEE DOOR NOTE #2 |
| 102C | VENDING | 102 | 4'4-1/4" x 7'0" | H | MTL | PT6 | N/A | MTL | PT6 | N/A | N/A | N/A | N/A | N/A | N/A | N/A | N/A | 5 | SWING GATE, SEE DOOR NOTE #2 |
| 103 | CHASE | 103 | 3'0" x 7'0" | C | HM | CUSTOM | 1 | HM | PT3 | 5/A-005 | 6/A-005 | 7/A-005 | N/A | N/A | N/A | N/A | N/A | 4 | |
| 105 | CHASE | 105 | 3'0" x 7'0" | C | HM | CUSTOM | 1 | HM | PT3 | 5/A-005 | 6/A-005 | 7/A-005 | N/A | N/A | N/A | N/A | N/A | 4 | |
| 107 | CHASE | 107 | 3'0" x 7'0" | C | HM | CUSTOM | 1 | HM | PT3 | 5/A-005 | 6/A-005 | 7/A-005 | N/A | N/A | N/A | N/A | N/A | 4 | |
| 110 | CHASE | 110 | 3'0" x 7'0" | C | HM | CUSTOM | 1 | HM | PT3 | 5/A-005 | 6/A-005 | 7/A-005 | N/A | N/A | N/A | N/A | N/A | 4 | |
| 112 | CHASE | 112 | 3'0" x 7'0" | C | HM | CUSTOM | 1 | HM | PT3 | 5/A-005 | 6/A-005 | 7/A-005 | N/A | N/A | N/A | N/A | N/A | 4 | |
| 113 | COMMUNCIATIONS | 113 | 3'0" x 7'0" | C | HM | PT2 | 1 | HM | PT3 | 5/A-005 | 6/A-005 | 7/A-005 | N/A | N/A | N/A | N/A | N/A | 4 | |
| 115 | CHASE | 115 | 3'0" x 7'0" | C | HM | CUSTOM | 1 | HM | PT3 | 5/A-005 | 6/A-005 | 7/A-005 | N/A | N/A | N/A | N/A | N/A | 4 | |
| **MAINTENANCE BUILDING** | | | | | | | | | | | | | | | | | | | |
| 201A | MAINTENANCE | 201 | 3'0" x 7'0" | D | HM | EPT1 | 1 | HM | EPT2 | 8/A-005 | 9/A-005 | 10/A-005 | N/A | N/A | N/A | N/A | N/A | 6 | |
| 201B | MAINTENANCE | 201 | 12'0" x 8'6" | G | MTL | WHITE | N/A | MTL | EPT2 | N/A | N/A | N/A | N/A | N/A | N/A | N/A | N/A | 3 | |
| 202 | FLAMABLE STORAGE | 202 | 3'0" x 7'0" | E | HM | EPT1 | 1 | HM | EPT2 | 8/A-005 | 9/A-005 | 10/A-005 | N/A | N/A | N/A | N/A | N/A | 7 | 14" SQUARE LOUVERS |
| **TRUCKER-VENDING BUILDING** | | | | | | | | | | | | | | | | | | | |
| 301 | WOMEN | 301 | 3'0" x 7'0" | D | HM | EPT1 | 1 | HM | EPT2 | 8/A-005 | 9/A-005 | 10/A-005 | N/A | N/A | N/A | N/A | N/A | 8 | |
| 302 | CHASE | 302 | 3'0" x 7'0" | D | HM | EPT1 | 1 | HM | EPT2 | 8/A-005 | 9/A-005 | 10/A-005 | N/A | N/A | N/A | N/A | N/A | 4 | |
| 303 | MEN | 303 | 3'0" x 7'0" | D | HM | EPT1 | 1 | HM | EPT2 | 8/A-005 | 9/A-005 | 10/A-005 | N/A | N/A | N/A | N/A | N/A | 8 | |
| 304A | VENDING | 304 | 4'10" x 7'0" | J | MTL | PT6 | N/A | MTL | PT6 | N/A | N/A | N/A | N/A | N/A | N/A | N/A | N/A | 5 | SWING GATE, SEE DOOR NOTE #3 |
| 304B | VENDING | 304 | 4'10" x 7'0" | J | MTL | PT6 | N/A | MTL | PT6 | N/A | N/A | N/A | N/A | N/A | N/A | N/A | N/A | 5 | SWING GATE, SEE DOOR NOTE #3 |
| 304C | VENDING | 304 | 2'0" x 7'0" | K | MTL | PT6 | N/A | MTL | PT6 | N/A | N/A | N/A | N/A | N/A | N/A | N/A | N/A | 5 | SWING GATE, SEE DOOR NOTE #3 |

**DOOR NOTES:**

1.) SEE SHEETS A-005 FOR SLIDING GATE DETAILS

2.) SEE SHEETS A-501 AND A-502 FOR VENDING SWING GATE DETAILS

3.) SEE SHEETS A-531 AND A-532 FOR OUTSIDE VENDING SWING GATE DETAILS

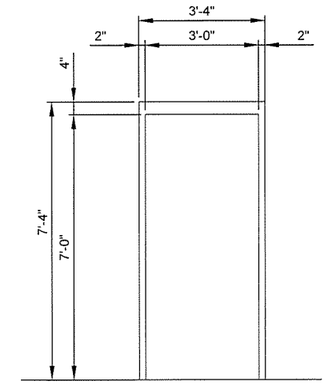


1 HOLLOW METAL FRAME - 4" HEAD

2 / A-003 DOOR FRAME ELEVATIONS

SCALE: 1/2" = 1'-0"

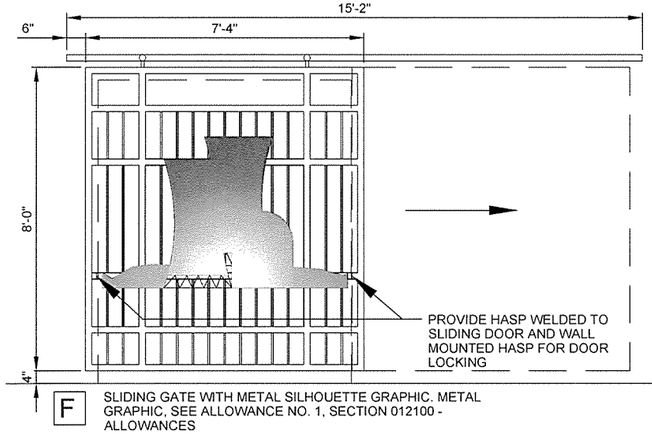


F SLIDING GATE WITH METAL SILHOUETTE GRAPHIC. METAL GRAPHIC, SEE ALLOWANCE NO. 1, SECTION 012100 - ALLOWANCES

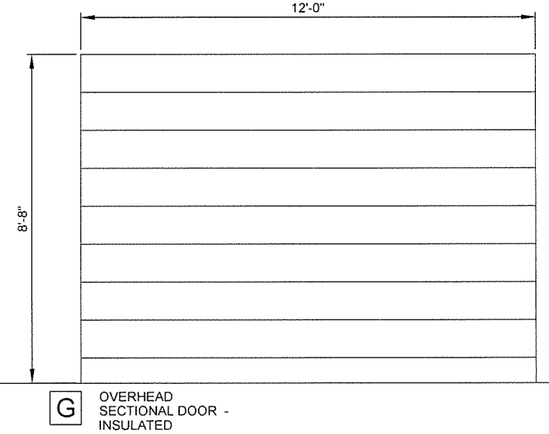


G OVERHEAD SECTIONAL DOOR - INSULATED

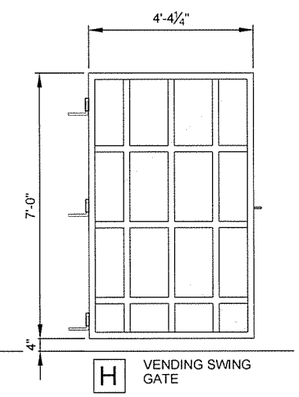


H VENDING SWING GATE

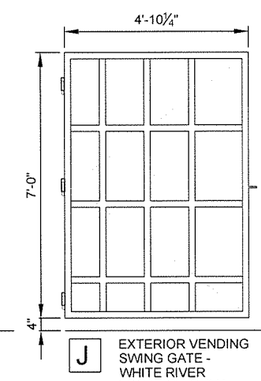


J EXTERIOR VENDING SWING GATE - WHITE RIVER LOCATION ONLY

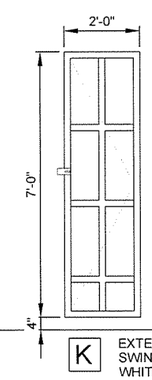


K EXTERIOR VENDING SWING GATE - WHITE RIVER LOCATION ONLY

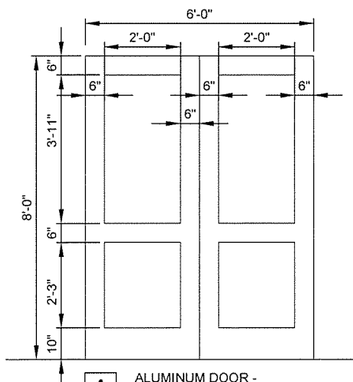


A ALUMINUM DOOR - INSULATED GLAZING

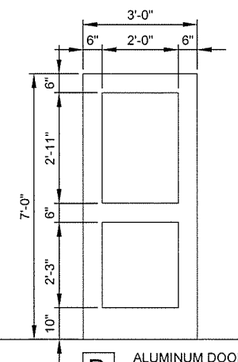


B ALUMINUM DOOR - INSULATED GLAZING

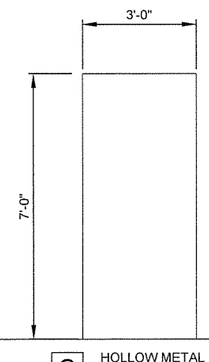


C HOLLOW METAL DOOR

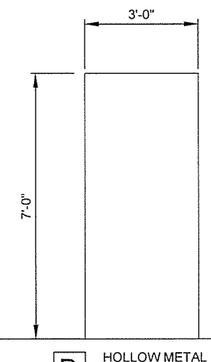


D HOLLOW METAL DOOR - INSULATED

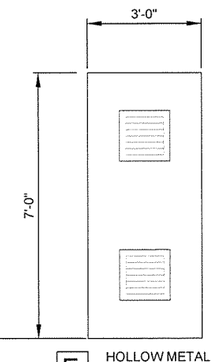


E HOLLOW METAL DOOR - 16" x 16" LOUVERS

1 / A-003 DOOR ELEVATIONS

SCALE: 1/2" = 1'-0"

0 1' 2' 4' 6'

SCALE: 1/2" = 1'-0"


GARVER
4701 Northshore Drive
N Little Rock, AR 72118
501-376-3633
www.GarverUSA.com


REGISTERED ARCHITECT Garver, LLC License No. LL111 STATE OF ARKANSAS

REGISTERED ARCHITECT Greg A. Archer License No. 2674 10/1/15 STATE OF ARKANSAS

| IPC Symbol | Description | Date | Appr. |
|---|---|---|---|
| | ISSUED FOR CONSTRUCTION | 10/1/15 | JRR |

| | | | |
|---|---|---|---|
| Job Number 060451 | N/A | N/A | N/A |
| Submitted by John T. Vickers, P.E., S.E. Director, Facilities Services | Plot Scale 1:1 | Dwg Code - | - |
| Designed by J. RAMSEY | Drawn by J. RAMSEY | Plot Date 10/1/15 | Checked by G. ARCHER |
| File Name AH15WR-A-003.DWG | | | |

ARKANSAS HIGHWAY AND TRANSPORTATION DEPARTMENT
ARKANSAS TOURIST INFORMATION CENTER
(WHITE RIVER) (S)
JOB 061451

DOOR SCHEDULE & DOOR AND FRAME ELEVATIONS

Sheet Reference Number:

A-003

## KEYED NOTES

1. SAFETY GLASS-GL1
2. OBSCURE GLASS-GL2

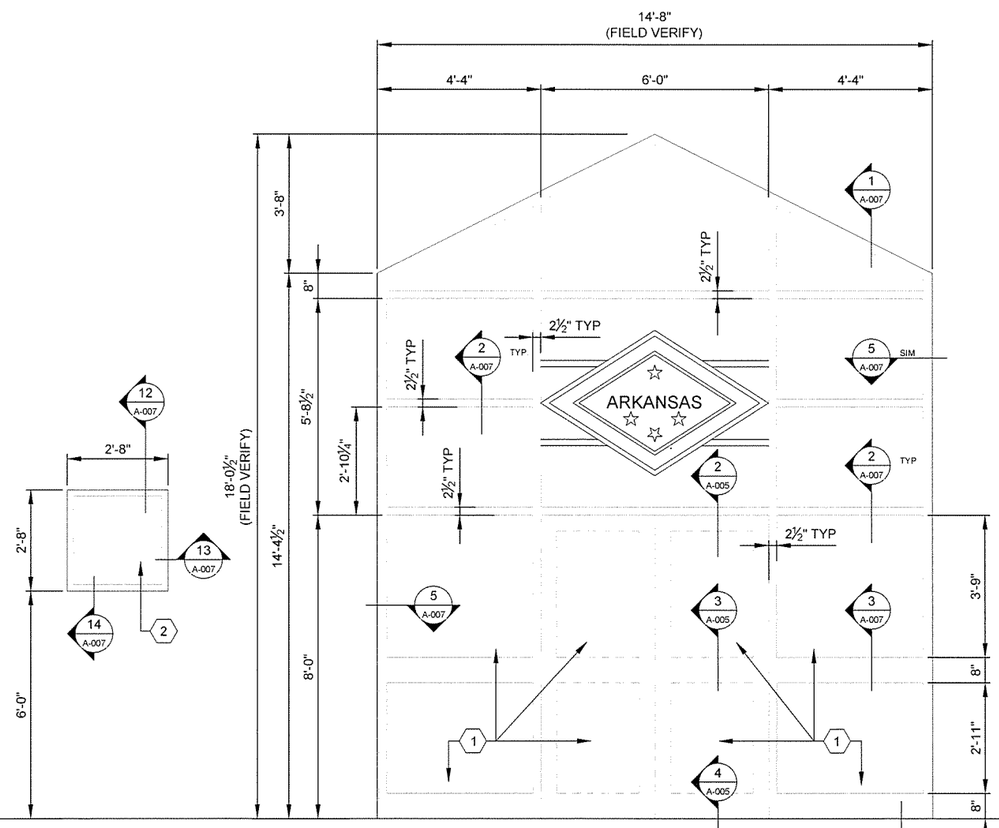


A ALUMINUM WINDOW - INSULATED GLAZING (FIELD VERIFY ALL DIMENSIONS)

B ALUMINUM STOREFRONT WINDOW - INSULATED GLAZING - WITH "ARKANSAS LOGO" SURFACE MOUNTED TO FRAME. ARKANSAS LOGO, SEE ALLOWANCE NO.1, SECTION 012100 - ALLOWANCES (FIELD VERIFY ALL DIMENSIONS)

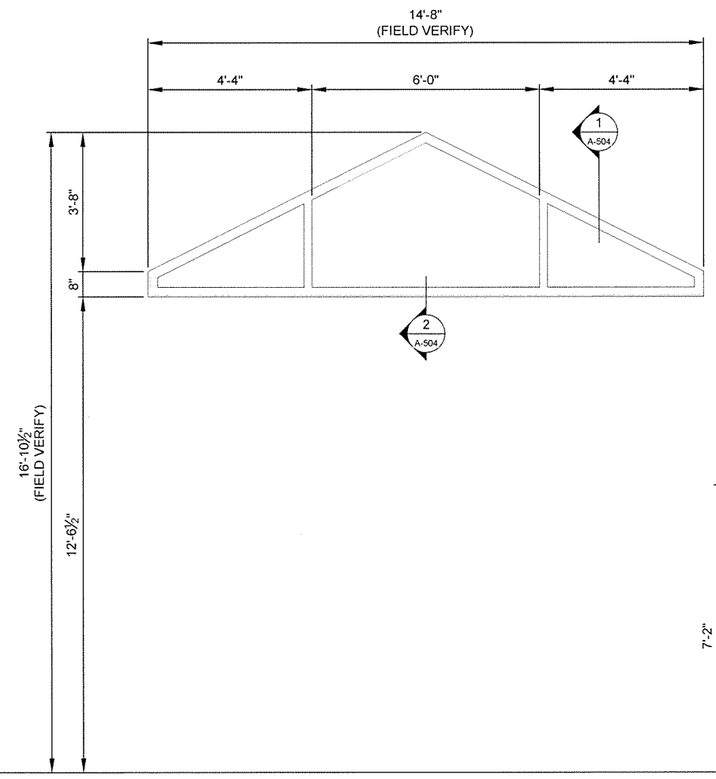


C ALUMINUM WINDOW - INSULATED GLAZING (FIELD VERIFY ALL DIMENSIONS)

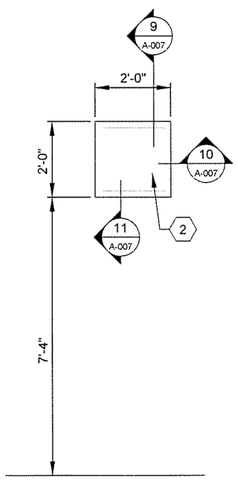


E ALUMINUM WINDOW - INSULATED GLAZING - WHITE RIVER TRUCKER-VENDING BUILDING ONLY (FIELD VERIFY ALL DIMENSIONS)

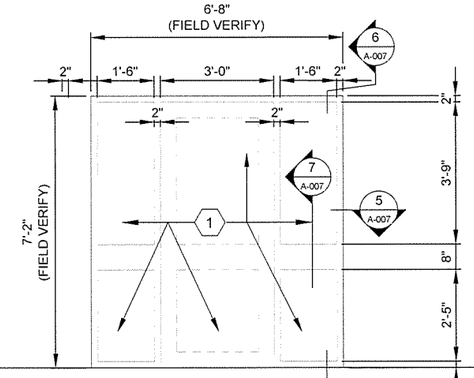


D ALUMINUM STOREFRONT - INSULATED GLAZING (FIELD VERIFY ALL DIMENSIONS)

1 / A-004 WINDOW ELEVATIONS

SCALE: ½" = 1'-0"

0 1' 2' 4' 6'

SCALE: ½" = 1'-0"


GARVER
4701 Northshore Drive
N Little Rock, AR 72118
501-376-3633
www.GarverUSA.com


REGISTERED ARCHITECT
Garver, LLC
License No. LL111
STATE OF ARKANSAS

REGISTERED ARCHITECT
Greg A. Archer
License No. 2871
10/1/15
STATE OF ARKANSAS

| IPC Symbol | Description | Date | Appr. |
|---|---|---|---|
| | ISSUED FOR CONSTRUCTION | 10/1/15 | JRR |

| | |
|---|---|
| Job Number | 060451 |
| Submitted by | John T. Vaterlis, III, P.E., SE |
| Director of Structural Services | N/A |
| Plot Date | 10/1/15 |
| Plot Scale | 1:1 |
| Drawn by | J. RAMSEY |
| Checked by | G. ARCHER |
| Drwg Code | - |
| Designed by | J. RAMSEY |
| File Name | AH15WR-A-004.DWG |

ARKANSAS HIGHWAY AND TRANSPORTATION DEPARTMENT
ARKANSAS TOURIST INFORMATION CENTER
(WHITE RIVER) (S)
JOB 061451

WINDOW ELEVATIONS

Sheet Reference Number:

A-004

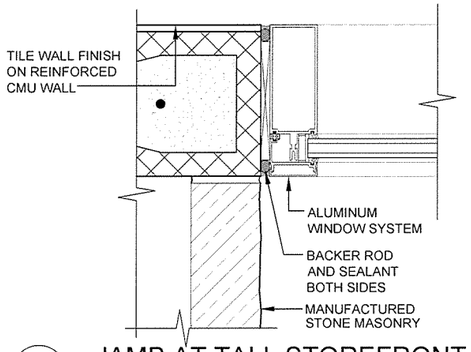


1 / A-005 JAMB AT TALL STOREFRONT
SCALE: 3" = 1'-0"

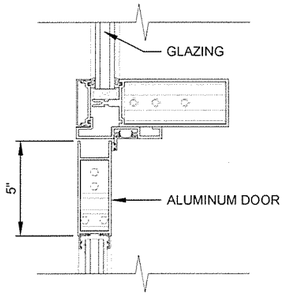


2 / A-005 HEAD ALUM ST DOOR
SCALE: 3" = 1'-0"

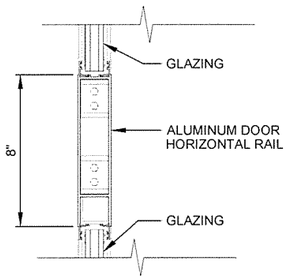


3 / A-005 STOREFROWT DOOR HORIZONTAL
SCALE: 3" = 1'-0"

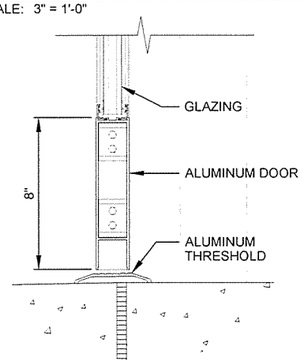


4 / A-005 SILL AT STOREFRONT DOOR
SCALE: 3" = 1'-0"

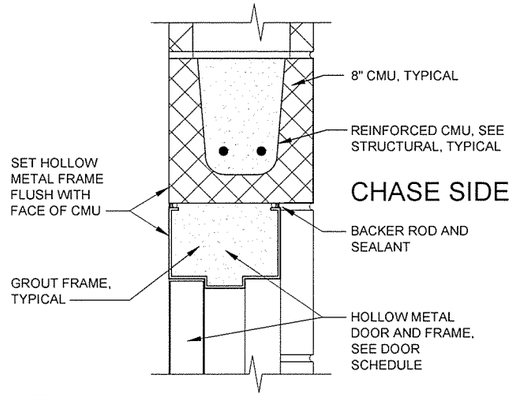


5 / A-005 H.M. FLUSH DOOR HEAD
SCALE: 3" = 1'-0"

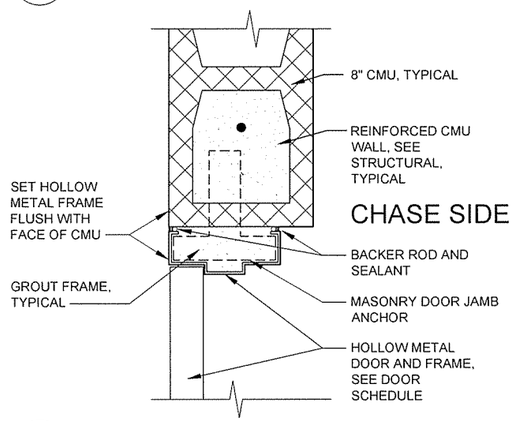


6 / A-005 H.M. FLUSH DOOR JAMB
SCALE: 3" = 1'-0"

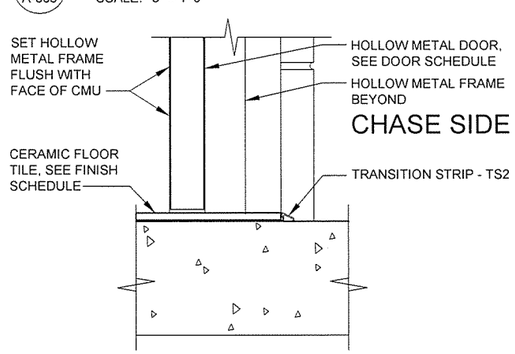


7 / A-005 H.M. FLUSH DOOR THRESHOLD
SCALE: 3" = 1'-0"

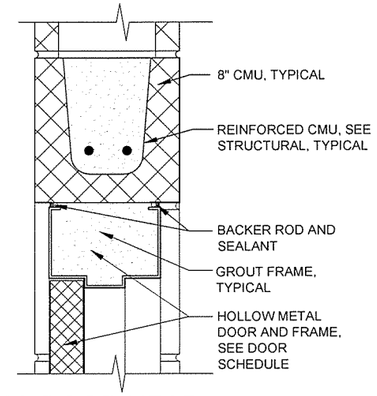


8 / A-005 H.M. DOOR HEAD
SCALE: 3" = 1'-0"

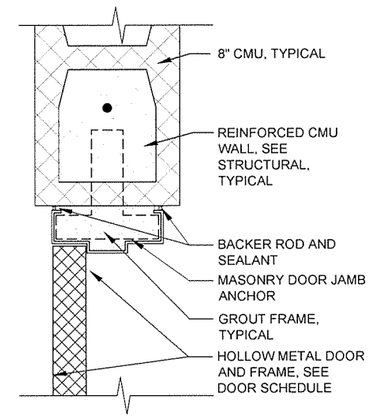


9 / A-005 H.M. DOOR JAMB
SCALE: 3" = 1'-0"

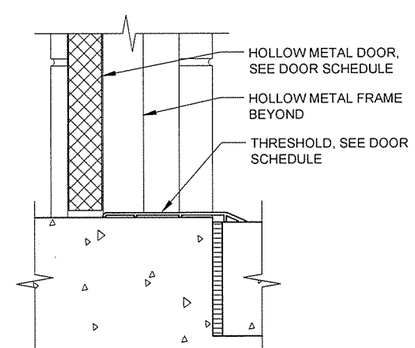


10 / A-005 H.M. DOOR THRESHOLD
SCALE: 3" = 1'-0"

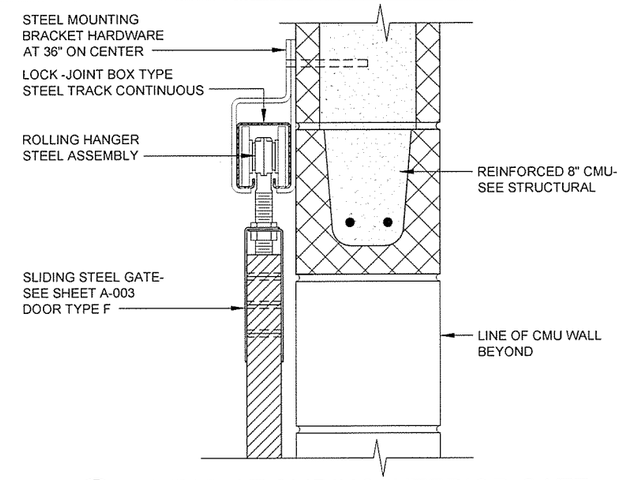


11 / A-005 HEAD AT SLIDING INTERIOR GATE
SCALE: 3" = 1'-0"

0 3" 6" 9" 1'
SCALE: 3" = 1'-0"

GARVER
4701 Northshore Drive
N Little Rock, AR 72118
501-376-3633
www.GarverUSA.com

REGISTERED ARCHITECT Garver, LLC License No. LL111 STATE OF ARKANSAS

REGISTERED ARCHITECT Greg A Archer License No. 2671 STATE OF ARKANSAS

| Symbol | Description | Date | Appr. |
|---|---|---|---|
| IFC | ISSUED FOR CONSTRUCTION | 10/1/15 | JRR |

Job Number 060451

Submitted by John T. Watkins, III, PE, SE Director, Engineering Services

Plot Date 10/1/15 | Plot Scale 1:1 | Dwg Code N/A | N/A

Designed by J RAMSEY | Drawn by J DEMAINE | Checked by G. ARCHER | File Name AH15VR-A-005.DWG

ARKANSAS HIGHWAY AND TRANSPORTATION DEPARTMENT
ARKANSAS TOURIST INFORMATION CENTER
(WHITE RIVER) (S)
JOB 061451

DOOR DETAILS

Sheet Reference Number:
A-005

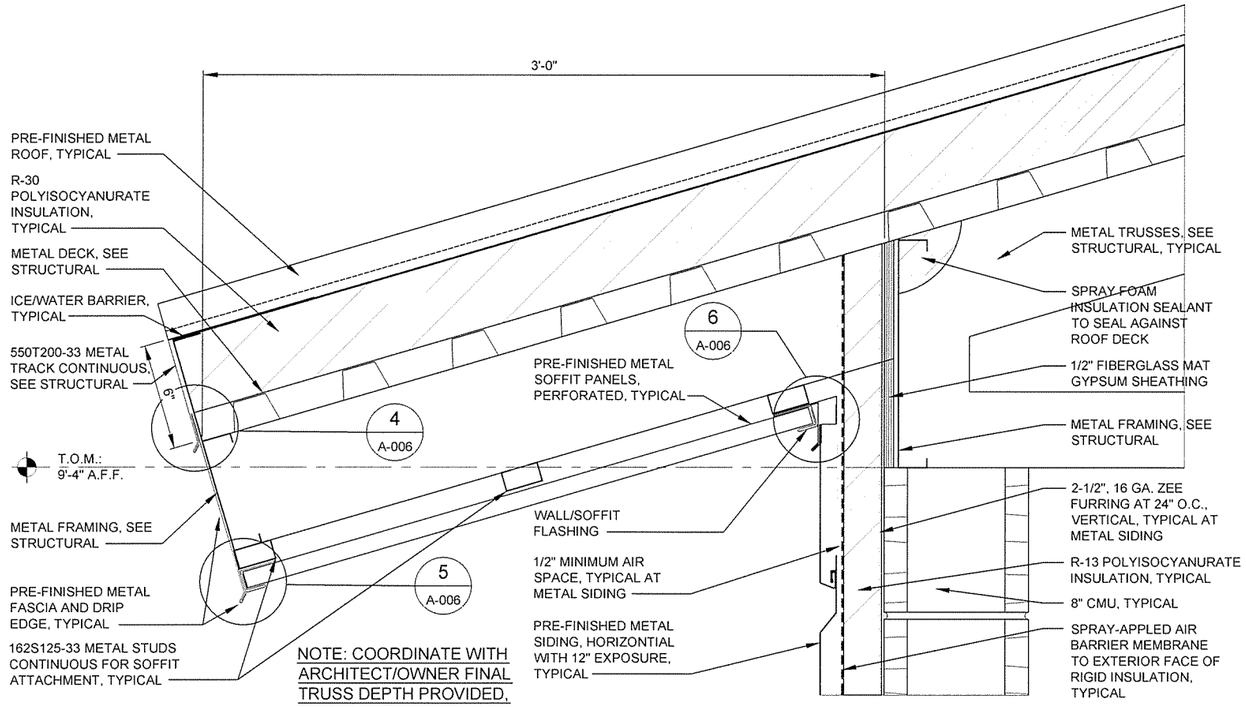


NOTE: COORDINATE WITH ARCHITECT/OWNER FINAL TRUSS DEPTH PROVIDED, FASCIA AND SOFFIT CONFIGURATION

1 / A-006 ROOF OVERHANG DETAIL
SCALE: 3" = 1'-0"

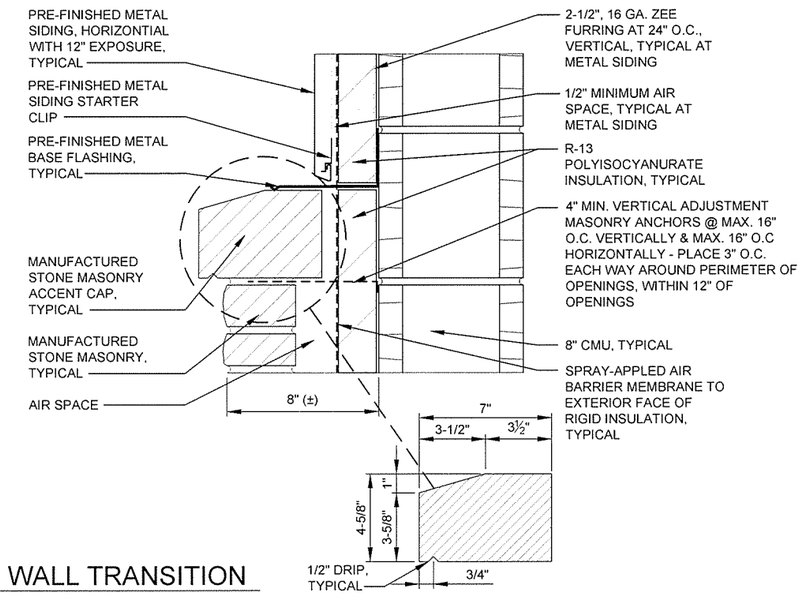


2 / A-006 WALL TRANSITION
SCALE: 3" = 1'-0"

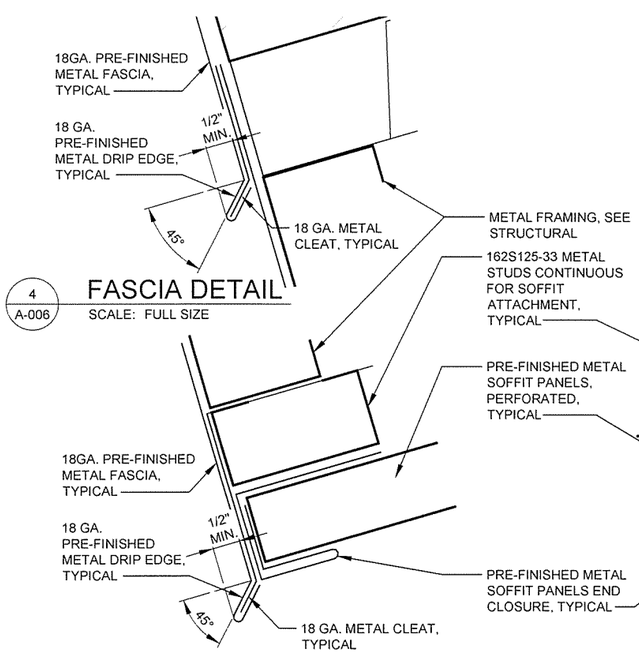


4 / A-006 FASCIA DETAIL
SCALE: FULL SIZE

5 / A-006 FASCIA DRIP
SCALE: FULL SIZE

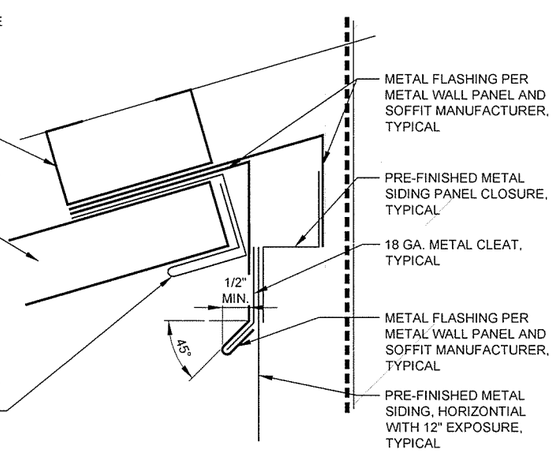


6 / A-006 SOFFIT DETAIL
SCALE: FULL SIZE

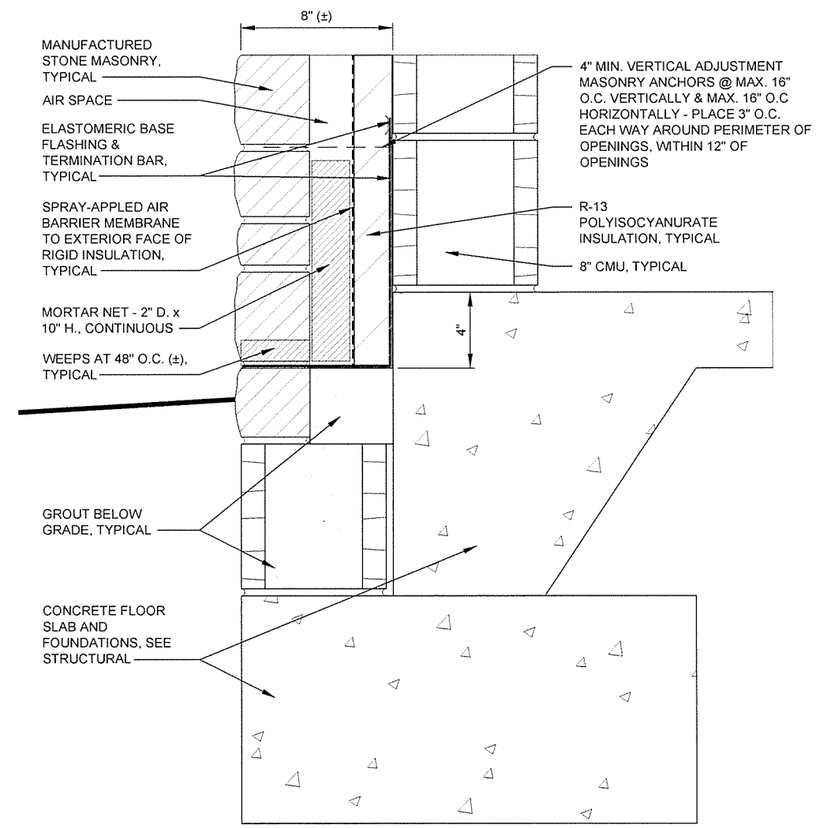


3 / A-006 WALL GRADE DETAIL
SCALE: 3" = 1'-0"

0 3" 6" 9" 1'
SCALE: 3" = 1'-0"


GARVER
4701 Northshore Drive
N Little Rock, AR 72118
501-376-3633
www.GarverUSA.com


REGISTERED ARCHITECT Garver, LLC License No. LL111 STATE OF ARKANSAS

REGISTERED ARCHITECT Greg A. Archer License No. 2671 STATE OF ARKANSAS

| Symbol | Description | Date | Appr. |
|---|---|---|---|
| IFC | ISSUED FOR CONSTRUCTION | 10/1/15 | JRR |

Job Number 060451
Submitted by John T. Watkins, III, PE, SE Director, Facility Services
Designed by J RAMSEY
Drawn by J DEMAINE
Checked by G ARCHER
Plot Date 10/1/15
Plot Scale 1:1
Dwg Code -
File Name AH15WR-A-006.DWG

ARKANSAS HIGHWAY AND TRANSPORTATION DEPARTMENT
ARKANSAS TOURIST INFORMATION CENTER
(WHITE RIVER) (S)
JOB 061451

STANDARD WALL DETAILS

Sheet Reference Number:
A-006

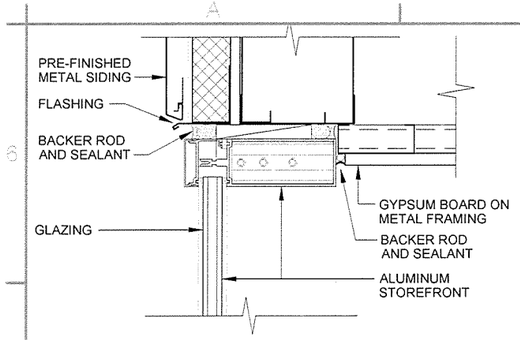


1 A-007 HEAD STOREFRONT
SCALE: 3" = 1'-0"

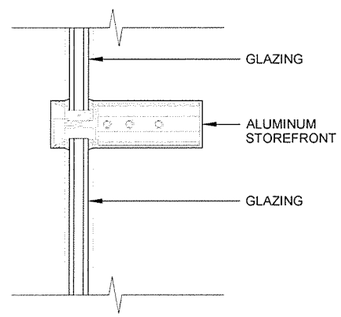


2 A-007 HORIZONTAL MULLIOIN
SCALE: 3" = 1'-0"

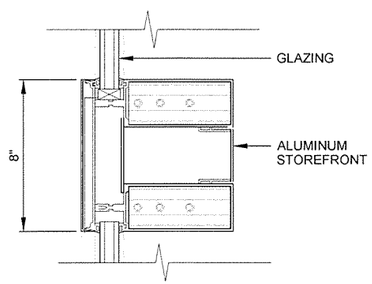


3 A-007 HORIZONTAL MULLION
SCALE: 3" = 1'-0"

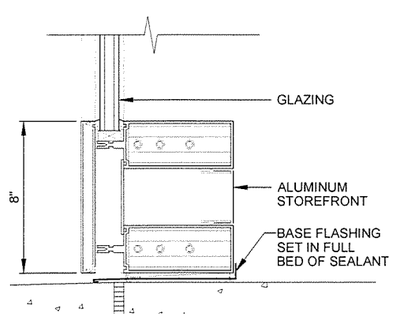


4 A-007 STOREFROST WINDOW SILL
SCALE: 3" = 1'-0"

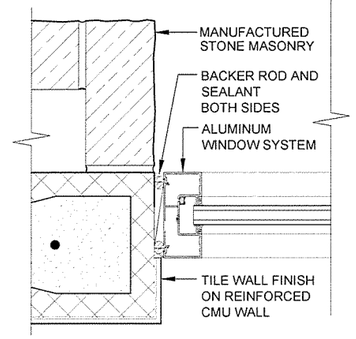


5 A-007 JAMB AT LOW STOREFRONT
SCALE: 3" = 1'-0"

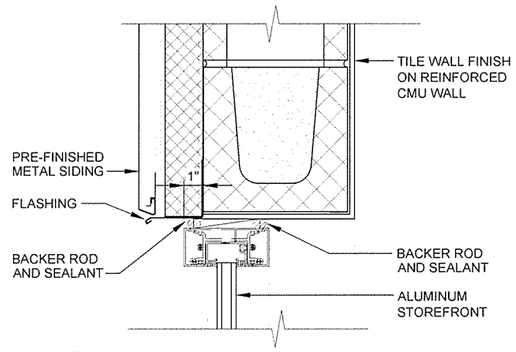


6 A-007 HEAD ALUM STOREFRONT
SCALE: 3" = 1'-0"

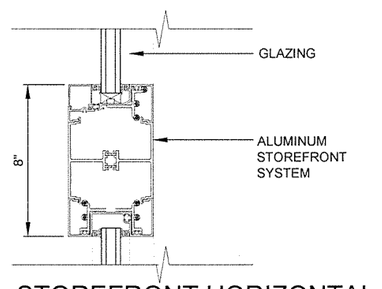


7 A-007 STOREFRONT HORIZONTAL
SCALE: 3" = 1'-0"

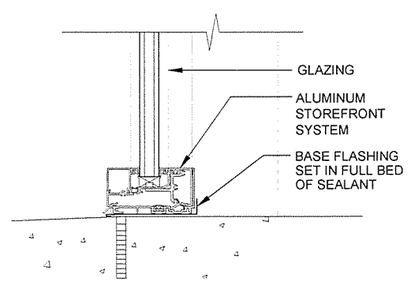


8 A-007 SILL AT LOW STOREFRONT
SCALE: 3" = 1'-0"

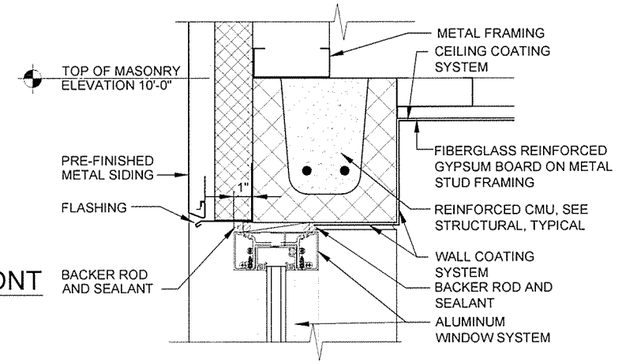


9 A-007 HEAD ALUM WINDOW
SCALE: 3" = 1'-0"

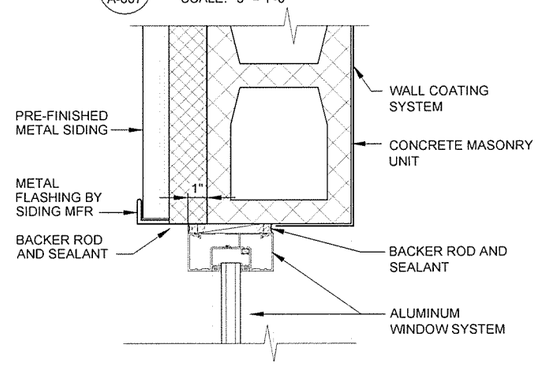


10 A-007 JAMB AT ALUM WINDOW
SCALE: 3" = 1'-0"

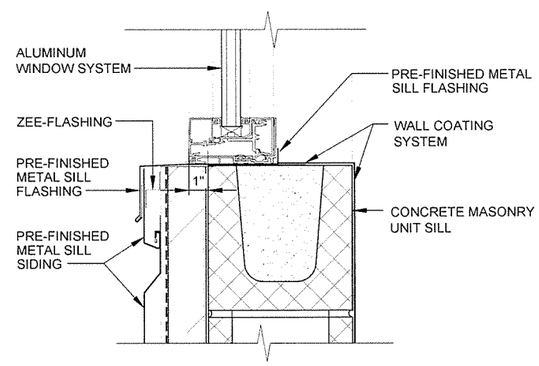


11 A-007 SILL ALUM WINDOW
SCALE: 3" = 1'-0"

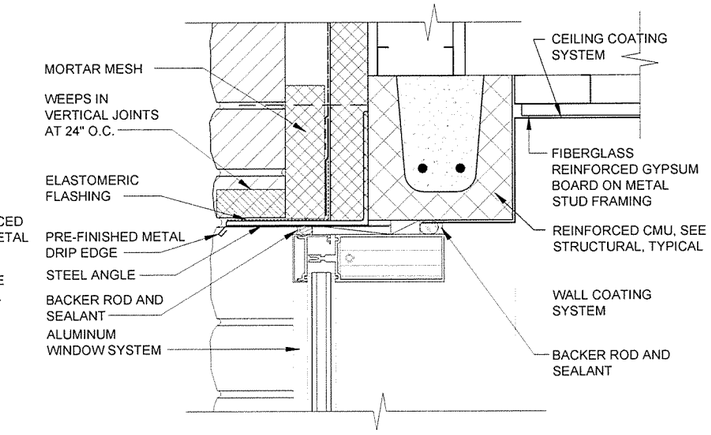


12 A-007 HEAD ALUM WINDOW
SCALE: 3" = 1'-0"

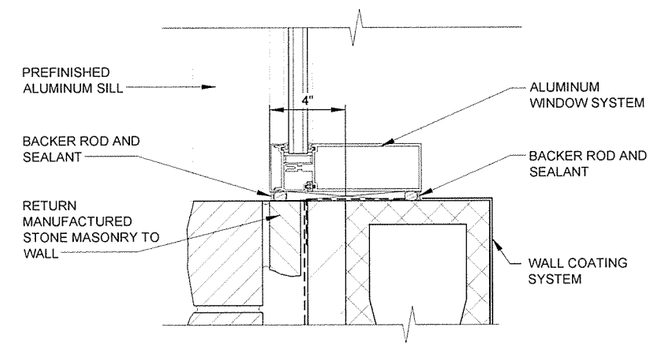


13 A-007 JAMB AT ALUM WINDOW
SCALE: 3" = 1'-0"

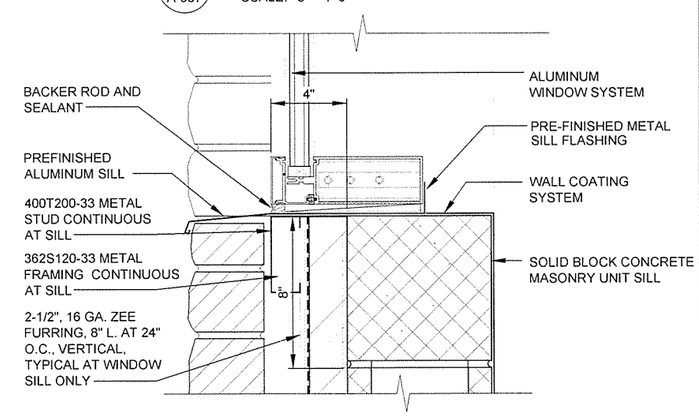


14 A-007 SILL ALUM WINDOW
SCALE: 3" = 1'-0"

0 3" 6" 9" 1'
SCALE: 3" = 1'-0"

GARVER
4701 Northshore Drive
N Little Rock, AR 72118
501-376-3633
www.GarverUSA.com

REGISTERED ARCHITECT Garver, LLC License No. LL111 STATE OF ARKANSAS

REGISTERED ARCHITECT Greg A. Archer License No. 2674 STATE OF ARKANSAS

| Symbol | Description | Date | Appr |
|---|---|---|---|
| IFC | ISSUED FOR CONSTRUCTION | 10/1/15 | JRR |

Job Number 060451
Submitted by: John T. Watkins, III, PE, SE Director, Federal Services
Designed by: J RAMSEY
Drawn by: J DEMAINE
Plot Date: 10/1/15
Plot Scale: 1:1
Checked by: G. ARCHER
Dwg Code: -
File Name: AH15VR-A-007.DWG

ARKANSAS HIGHWAY AND TRANSPORTATION DEPARTMENT
ARKANSAS TOURIST INFORMATION CENTER (WHITE RIVER) (S)
JOB 061451

WINDOW DETAILS

Sheet Reference Number:
A-007

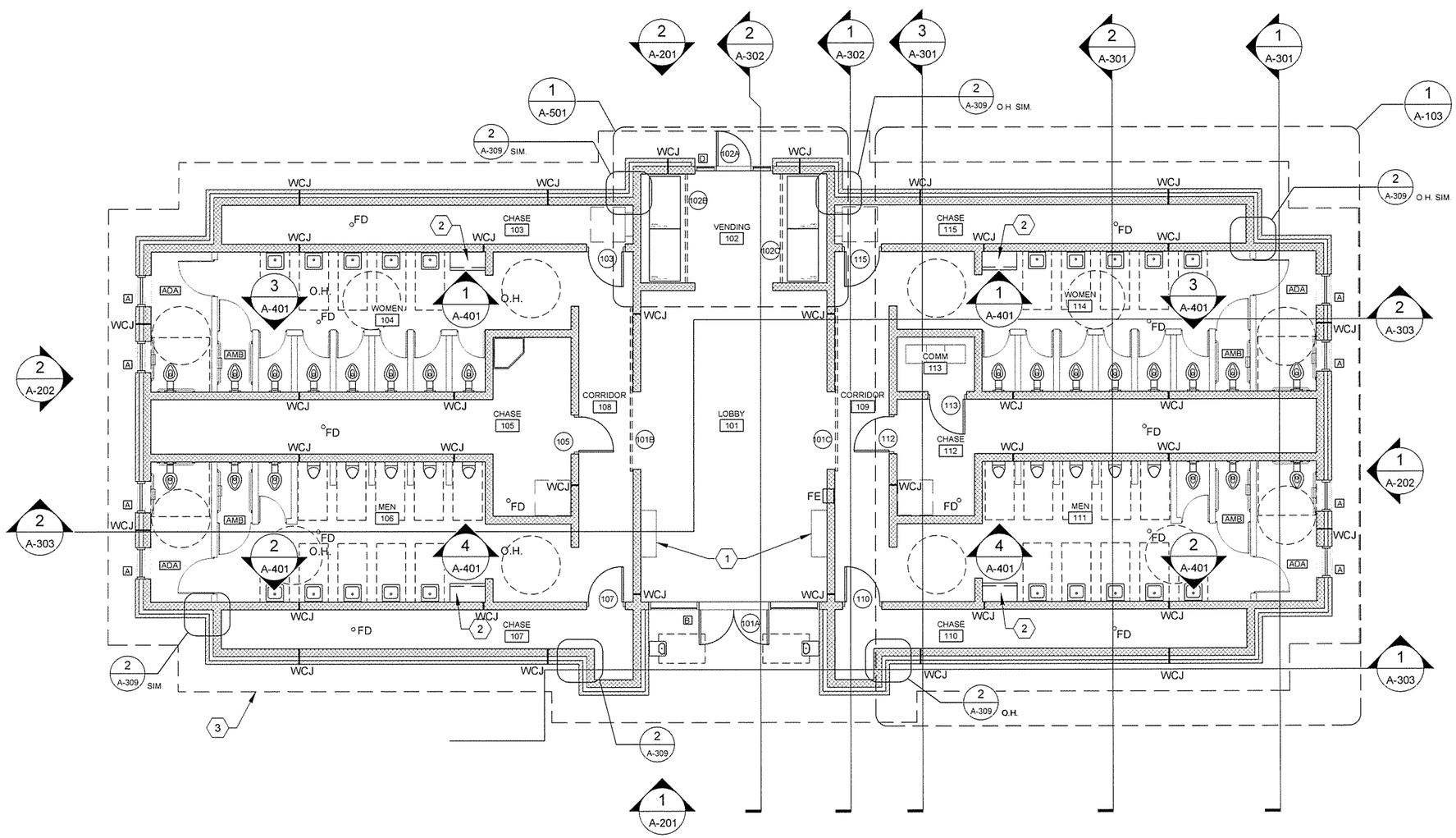


PLAN NORTH

## FLOOR PLAN

1 A-101 SCALE: 3/16" = 1'-0"

| GENERAL NOTES | KEYED NOTES | LEGEND |
|---|---|---|
| 1. SEE SHEET A-102 FOR DIMENSIONED FLOOR PLAN.<br>2. SEE SHEET A-103 FOR ENLARGED TOILET AREA DIMENSIONED FLOOR PLAN<br>3. SEE CIVIL SHEETS FOR ORIENTATION OF BUILDING ON SITE<br>4. SEE SHEET A-002 FOR MATERIAL AND COLOR LEGENDS | 1 WALL-MOUNTED MONITOR SECURITY CABINET, SEE ALLOWANCE NO. 2, SECTION 012100 - ALLOWANCES. CONFIRM FINAL MOUNTING HEIGHT WITH OWNER/ARCHITECT.<br>2 BABY CHANGING PLATFORM<br>3 DASHED LINE INDICATES ROOF OVERHANG ABOVE | 100 DOOR NUMBERS<br>A WINDOW SYMBOLS<br>ADA FLOOR CLEARANCES<br>ADA ADA COMPLIANT STALL<br>AMB ADA AMBULATORY COMPLIANT STALL<br>FE FIRE EXTINGUISHER AND SEMI-RECESSED CABINET<br>FD FLOOR DRAIN<br>WCJ WALL CONTROL JOINT, CMU AND MANUFACTURED STONE MASONRY |

0 2' 4' 10' 16'
SCALE: 3/16" = 1'-0"

GARVER
4701 Northshore Drive
N Little Rock, AR 72118
501-376-3633
www.GarverUSA.com

REGISTERED ARCHITECT Garver, LLC License No. LL111 STATE OF ARKANSAS

REGISTERED ARCHITECT Greg A. Archer License No. 2674 STATE OF ARKANSAS

| Symbol | Description | Date | Appr. |
|---|---|---|---|
| IFC | ISSUED FOR CONSTRUCTION | 10/1/15 | JRR |

| | | | |
|---|---|---|---|
| Designed by J. RAMSEY | Submitted by John T. Watkins, III, P.E. SE Director, Facilities Services | Job Number 060451 | |
| Drawn by J. RAMSEY | Plot Date 10/1/15 | Plot Scale 1:1 | N/A |
| Checked by G. ARCHER | Dwg Code | N/A | N/A |
| File Name AR15VR-A-101 DWG | | N/A | |

ARKANSAS HIGHWAY AND TRANSPORTATION DEPARTMENT
ARKANSAS TOURIST INFORMATION CENTER
(WHITE RIVER) (S)
JOB 061451

TOURIST INFORMATION CENTER
FLOOR PLAN

Sheet Reference Number:
A-101

Sheet 36 of 130

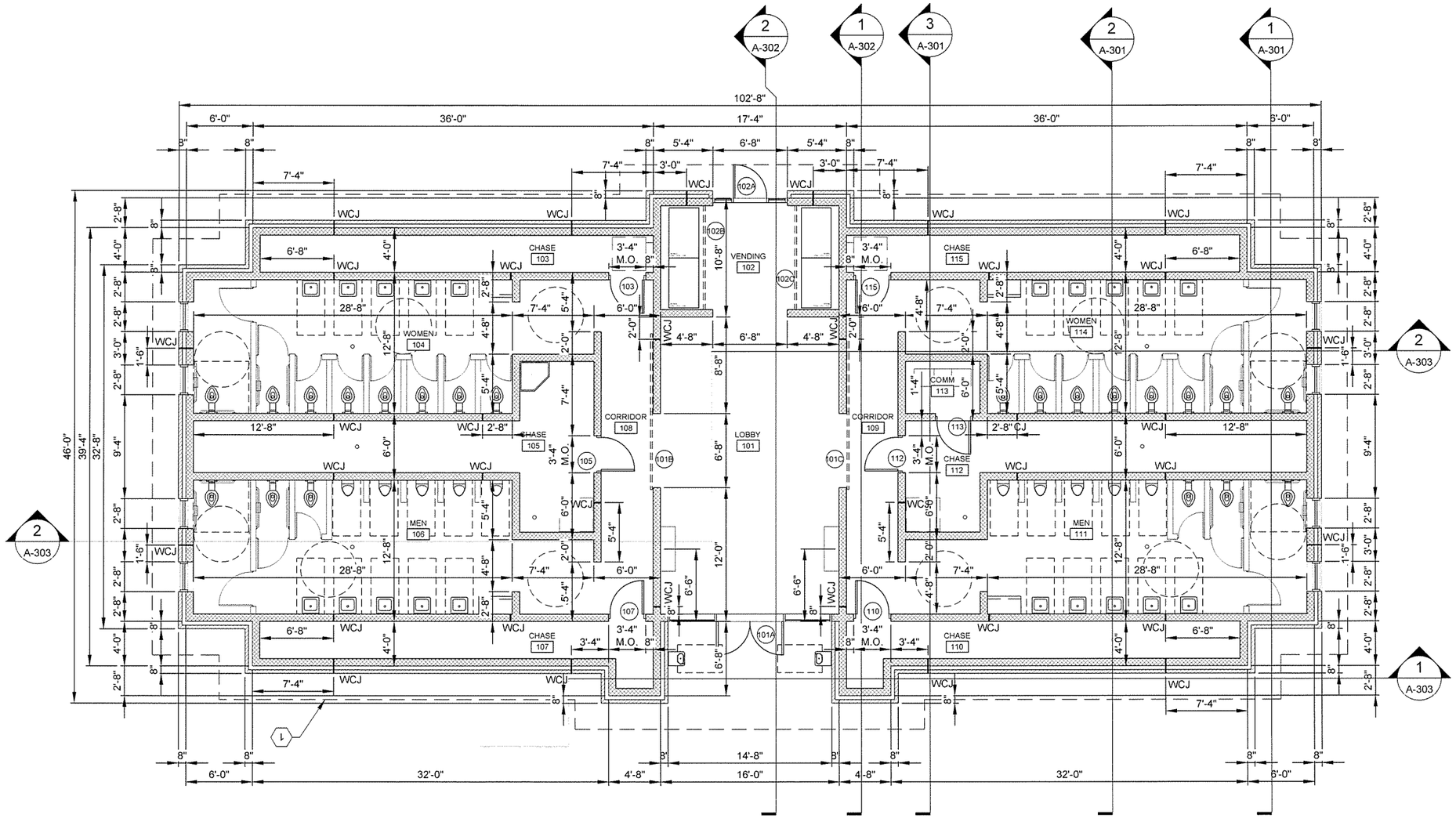


PLAN NORTH

1 A-102

## DIMENSIONED FLOOR PLAN

SCALE: 3/16" = 1'-0"

### GENERAL NOTES

1. SEE SHEET A-101 FOR DOOR AND WINDOW SYMBOLS
2. ALL DIMENSIONS TO FACE OF CMU UNLESS NOTED OTHERWISE
3. SEE CIVIL SHEETS FOR ORIENTATION OF BUILDING ON SITE
4. SEE SHEET A-002 FOR MATERIAL AND COLOR LEGENDS

### KEYED NOTES

1 DASHED LINE INDICATES ROOF OVERHANG ABOVE

### LEGEND

100 DOOR NUMBERS

A WINDOW SYMBOLS

ADA FLOOR CLEARANCES

FE FIRE EXTINGUISHER AND SEMI-RECESSED CABINET

FD FLOOR DRAIN

WCJ WALL CONTROL JOINT, CMU AND MANUFACTURED STONE MASONRY

0 2' 4' 10' 16'

SCALE: 3/16" = 1'-0"


GARVER
4701 Northshore Drive
N Little Rock, AR 72118
501-376-3633
www.GarverUSA.com


REGISTERED ARCHITECT
Garver, LLC
License No. LL111
STATE OF ARKANSAS

REGISTERED ARCHITECT
Greg A. Archer
License No. 2671
10/1/15
STATE OF ARKANSAS

| IFC Symbol | ISSUED FOR CONSTRUCTION Description | 10/1/15 Date | JRR Appr. |
|---|---|---|---|

Job Number 060451

Designed by: J. RAMSEY
Submitted by: John T. Watkins, III, PE, SE Director, Federal Services
Drawn by: J. RAMSEY
Plot Date: 10/1/15
Plot Scale: 1:1
Checked by: G. ARCHER
Dwg Code: -
File Name: AH15WR-A-102.DWG

ARKANSAS HIGHWAY AND TRANSPORTATION DEPARTMENT
ARKANSAS TOURIST INFORMATION CENTER
(WHITE RIVER) (S)
JOB 061451

TOURIST INFORMATION CENTER
DIMENSIONED FLOOR PLAN

Sheet Reference Number:
A-102

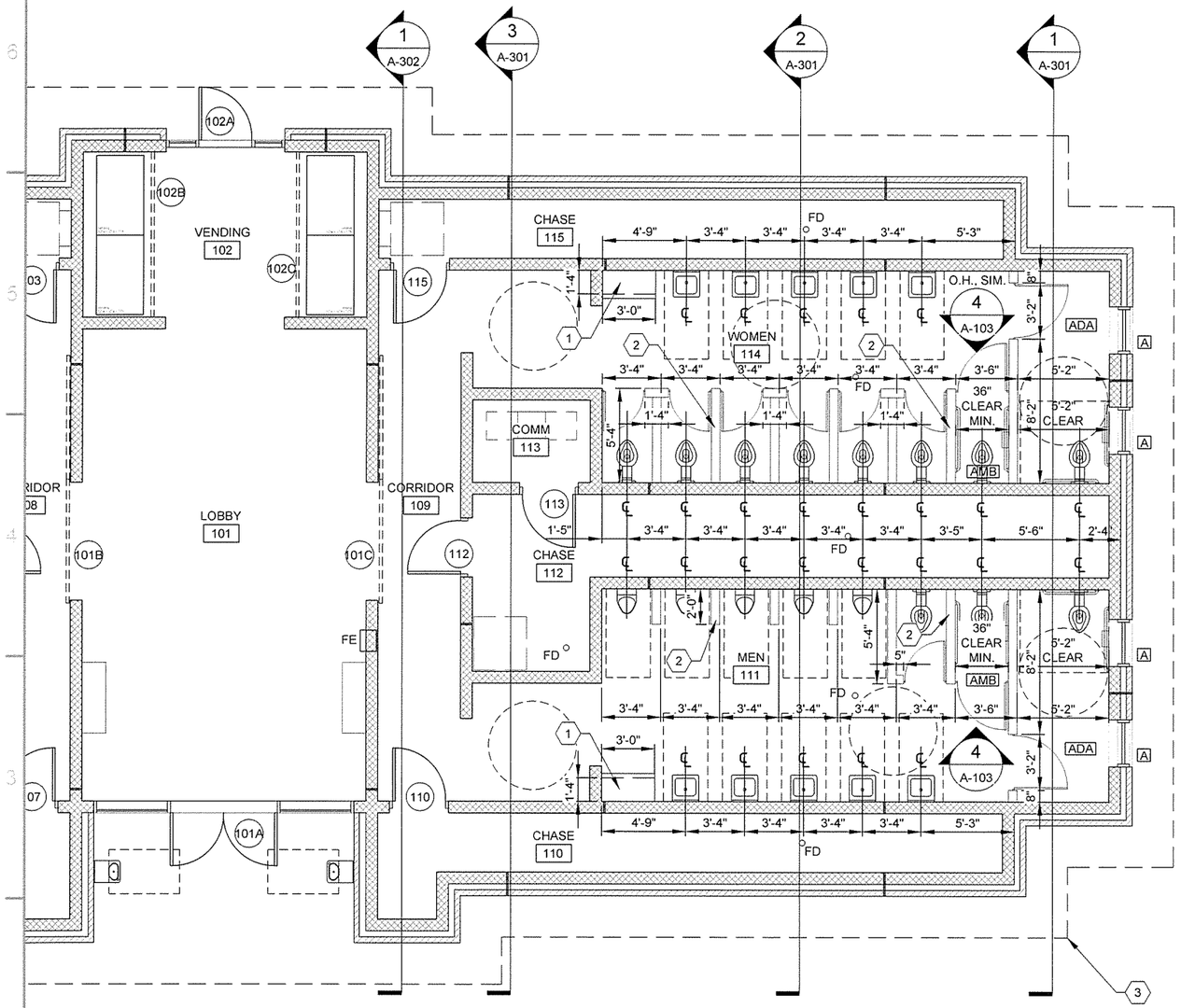


PLAN NORTH

1 A-103 PARTIAL FIXTURE DIMENSIONED FLOOR PLAN

SCALE: 1/4" = 1'-0"

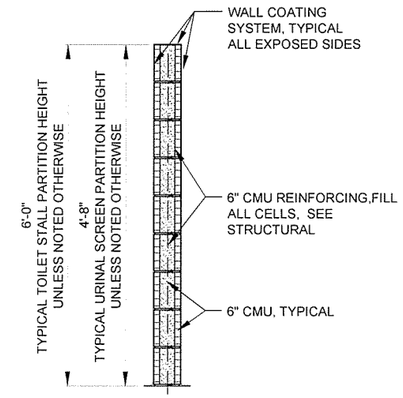


2 A-103 TYPICAL 6" CMU PARTITION WALL

SCALE: 3/4" = 1'-0"

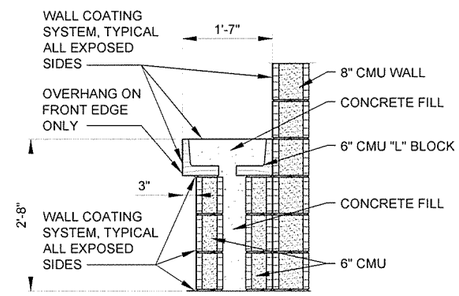


3 A-103 BABY CHANGING PLATFORM SECTION

SCALE: 3/4" = 1'-0"

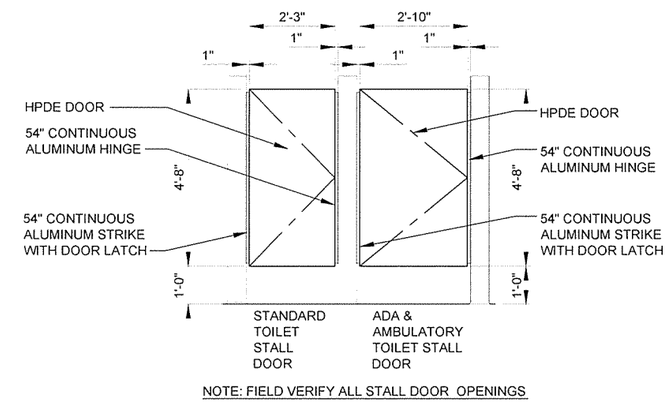


NOTE: FIELD VERIFY ALL STALL DOOR OPENINGS

4 A-103 HDPE TOILET STALL DOOR ELEVATIONS

SCALE: 1/2" = 1'-0"

## GENERAL NOTES

1. ALL DIMENSIONS TO FACE OF CMU UNLESS NOTED OTHERWISE
2. SEE CIVIL SHEETS FOR ORIENTATION OF BUILDING ON SITE
3. SEE SHEET A-002 FOR MATERIAL AND COLOR LEGENDS

## KEYED NOTES

1. BABY CHANGING PLATFORM, SEE 3/A-103 FOR DETAIL
2. 6" CMU PARTITION, TYPICAL ALL STALLS AND SCREENS, SEE 2/A-103 FOR DETAIL
3. DASHED LINE INDICATES ROOF OVERHANG ABOVE

## LEGEND

- 100 DOOR NUMBERS
- A WINDOW SYMBOLS
- ADA FLOOR CLEARANCES
- ADA ADA COMPLIANT STALL
- AMB ADA AMBULATORY COMPLIANT STALL
- FE FIRE EXTINGUISHER AND SEMI-RECESSED CABINET
- FD FLOOR DRAIN

0 2' 4' 8' 12'
SCALE: 1/4" = 1'-0"

0 1' 2' 4' 6'
SCALE: 1/2" = 1'-0"

0 6" 1' 2' 3' 4'
SCALE: 3/4" = 1'-0"


GARVER
4701 Northshore Drive
N Little Rock, AR 72118
501-376-3633
www.GarverUSA.com


REGISTERED ARCHITECT Garver, LLC License No. LL111 STATE OF ARKANSAS

REGISTERED ARCHITECT Greg A. Archer License No. 267 STATE OF ARKANSAS

| Symbol | Description | Date | Appr. |
|---|---|---|---|
| IFC | ISSUED FOR CONSTRUCTION | 10/1/15 | JRR |

Job Number 060451

Submitted by John T. Watkins, III, PE, SE Director, Federal Services

Designed by J RAMSEY

Drawn by J RAMSEY

Plot Date 10/1/15

Plot Scale 1:1

Checked by G ARCHER

Drwg Code: -

File Name AH15WR-A-103 DWG

ARKANSAS HIGHWAY AND TRANSPORTATION DEPARTMENT
ARKANSAS TOURIST INFORMATION CENTER
(WHITE RIVER) (S)
JOB 061451

TOURIST INFORMATION CENTER
PARTIAL ENLARGED FLOOR PLAN

Sheet Reference Number:

A-103

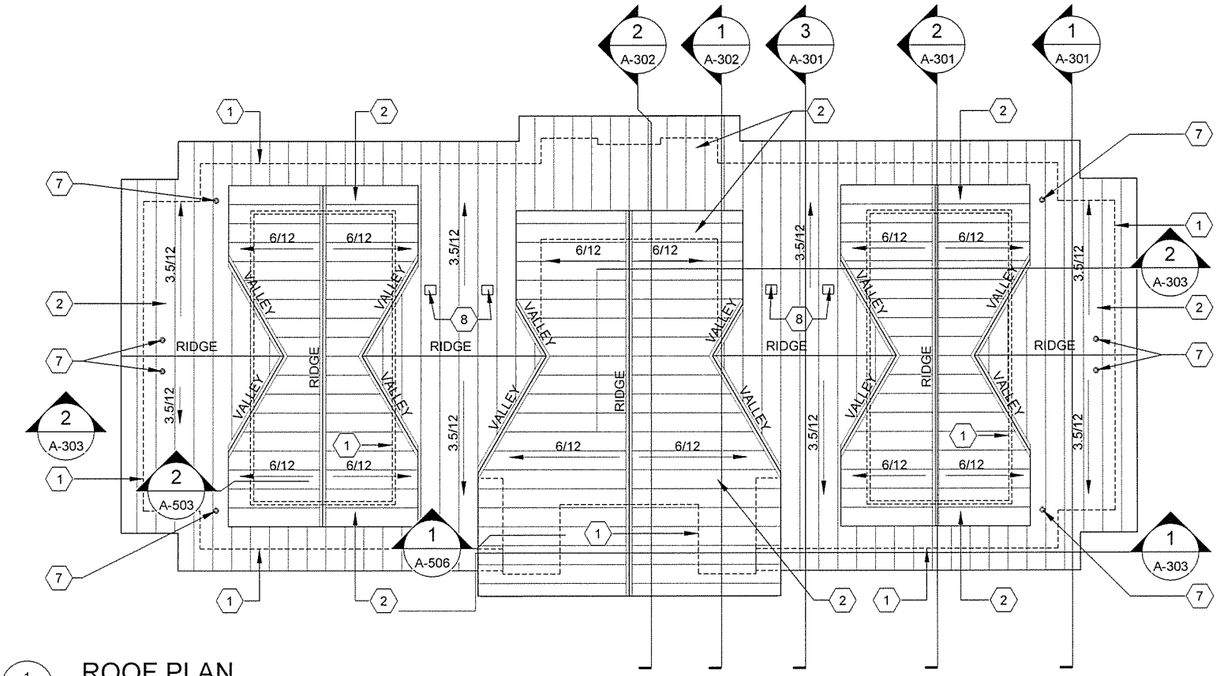


PLAN NORTH

1 A-104 ROOF PLAN

SCALE: 1/8" = 1'-0"

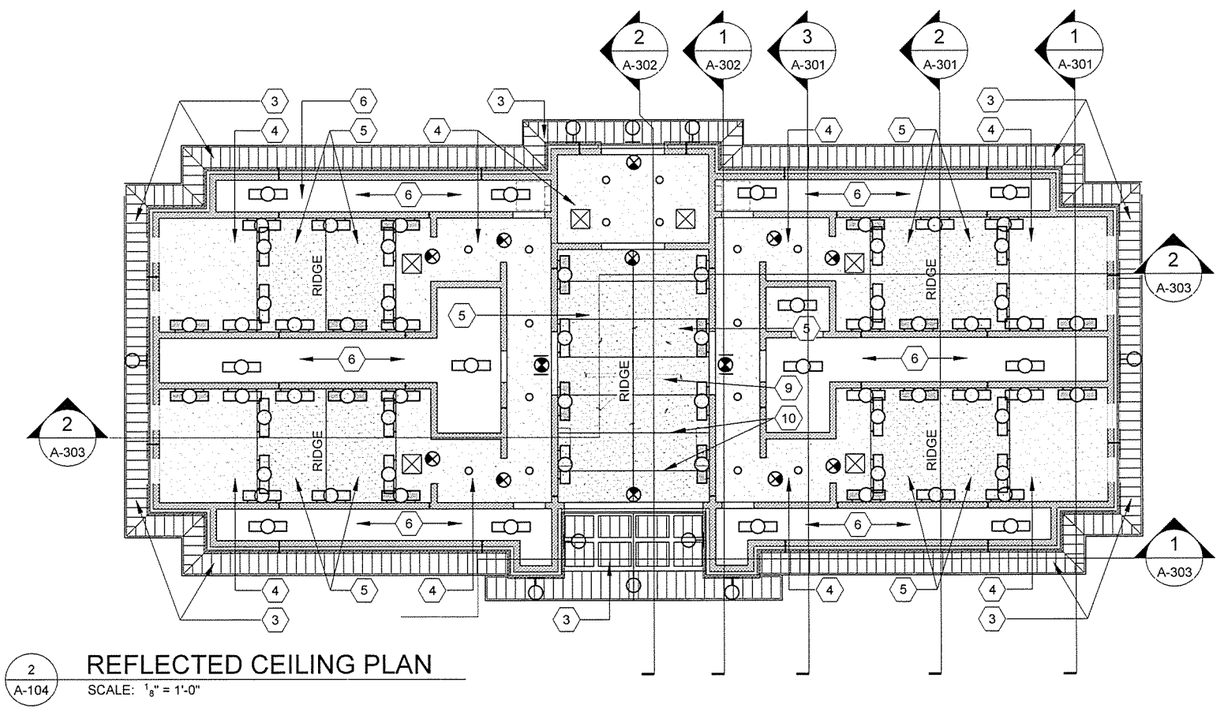


PLAN NORTH

2 A-104 REFLECTED CEILING PLAN

SCALE: 1/8" = 1'-0"

## KEYED NOTES

1. DASHED LINE INDICATES WALL BELOW
2. PRE-FINISHED METAL ROOF - RP1
3. PRE-FINISHED METAL SOFFIT - PERFORATED - MS1
4. GYPSUM BOARD CEILING, SEE FINISH SCHEDULE
5. SLOPED GYPSUM BOARD CEILING, SEE FINISH SCHEDULE
6. OPEN TO DECK ABOVE
7. ROOF VENT, SEE PLUMBING DRAWINGS
8. ROOF HOOD, CENTER IN METAL ROOF PAN, SEE MECHANICAL
9. CEILING FAN, SEE ELECTRICAL
10. GYPSUM BOARD CONTRIL JOINTS, COORDINATE LOCAITON WITH ARCHITECT/OWNER

## GENERAL NOTES

1. SEE CIVIL SHEETS FOR ORIENTATION OF BUILDING ON SITE
2. SEE SHEET A-002 FOR MATERIAL AND COLOR LEGENDS

## LEGEND

GYPSUM BOARD CEILING, PAINT FINISH, SEE FINISH SCHEDULE

PREFINISHED METAL SOFFIT - PERFORATED, MS1

NO CEILING - EXPOSED STRUCTURE

2 X 4 WALL MOUNTED FLUORESCENT LIGHT FIXTURE

2 X 4 WALL MOUNTED FLUORESCENT EMERGENCY LIGHT FIXTURE

2 X 4 PENDANT MOUNTED FLUORESCENT LIGHT FIXTURE

EXIT FIXTURE

RETURN GRILLE

SUPPLY GRILLE

0 4' 8' 16' 24'

SCALE: 1/8" = 1'-0"

GARVER
4701 Northshore Drive
N Little Rock, AR 72118
501-376-3633
www.GarverUSA.com

REGISTERED ARCHITECT Garver, LLC License No. LL111 STATE OF ARKANSAS

REGISTERED ARCHITECT Greg A. Archer License No. 2674 STATE OF ARKANSAS

| Symbol | Description | Date | Appr. |
|---|---|---|---|
| IFC | ISSUED FOR CONSTRUCTION | 10/1/15 | JRR |

| | | | |
|---|---|---|---|
| Designed by J. RAMSEY | Submitted by John T. Watkins, III, PE, SE Director, Federal Services | Job Number 000451 | |
| Drawn by J. RAMSEY | Plot Date 10/1/15 | Plot Scale 1:1 | N/A |
| Checked by G. ARCHER | Dwg Code - | N/A | |
| File Name AH15WR-A-104.DWG | | N/A | |

ARKANSAS HIGHWAY AND TRANSPORTATION DEPARTMENT
ARKANSAS TOURIST INFORMATION CENTER
(WHITE RIVER) (S)
JOB 061451

TOURIST INFORMATION CENTER
ROOF AND REFLECTED CEILING PLANS

Sheet Reference Number:

A-104

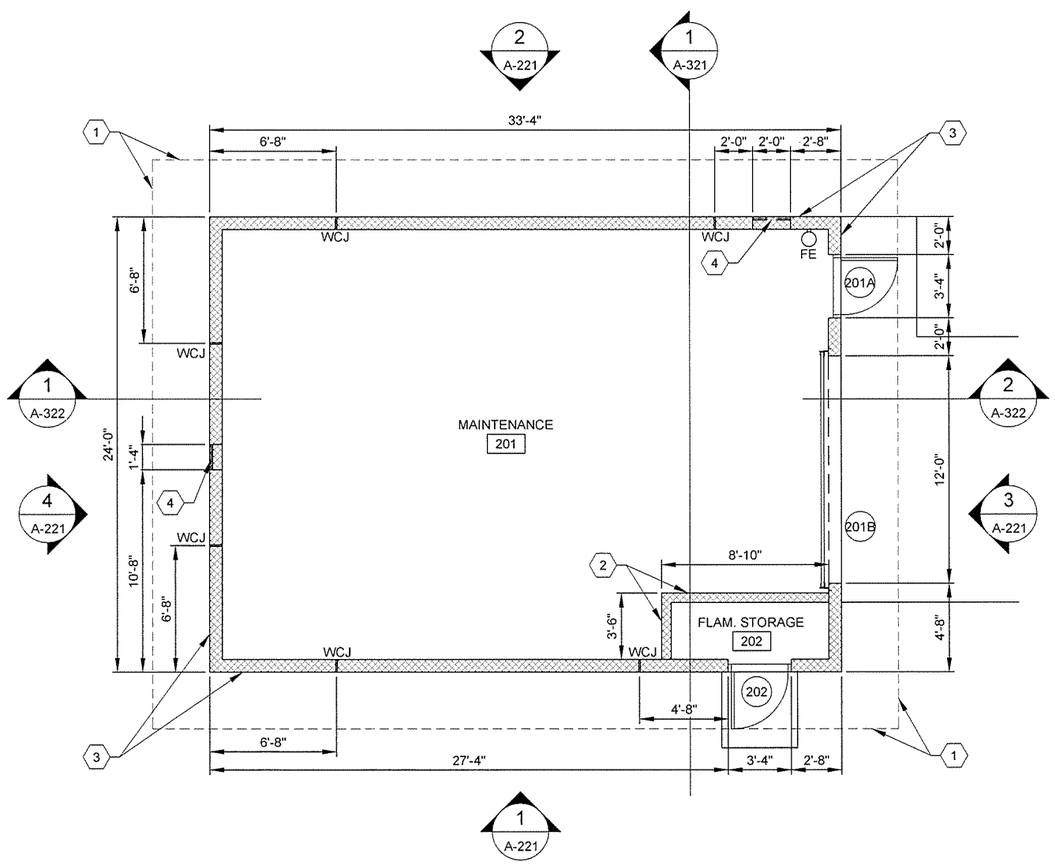


PLAN NORTH

1 A-121

## FLOOR PLAN

SCALE: 1/4" = 1'-0"

## GENERAL NOTES

1. ALL DIMENSIONS TO FACE OF CMU UNLESS NOTED OTHERWISE
2. SEE CIVIL SHEETS FOR ORIENTATION OF BUILDING ON SITE
3. SEE SHEET A-002 FOR MATERIAL AND COLOR LEGENDS

## KEYED NOTES

1. DASHED LINE INDICATES ROOF OVERHAND ABOVE
2. 6" CMU WALL
3. 8" CMU WALL WITH INTEGRAL WALL REPELLANT AND SEALER
4. LOUVER, SEE MECHANICAL DRAWINGS

## LEGEND

100 DOOR NUMBERS

FE FIRE EXTINGUISHER - WALL HUNG, HOOK MOUNTED

WCJ WALL CONTROL JOINT

0 2' 4' 8' 12'

SCALE: 1/4" = 1'-0"

GARVER
4701 Northshore Drive
N Little Rock, AR 72118
501-376-3633
www.GarverUSA.com

REGISTERED ARCHITECT
Garver, LLC
License No. LL111
STATE OF ARKANSAS

REGISTERED ARCHITECT
Greg A. Archer
License No. 2671
STATE OF ARKANSAS

| Symbol | Description | Date | Appr. |
|---|---|---|---|
| IFC | ISSUED FOR CONSTRUCTION | 10/1/15 | JRR |

Designed by: J. RAMSEY
Drawn by: J. RAMSEY
Checked by: G. ARCHER
Submitted by: John T. Watkins, III, PE, SE, Director, Federal Services
Plot Date: 10/1/15
Plot Scale: 1:1
Drwg Code: -
File Name: AH15WR-A-121.DWG
Job Number: 060451
N/A
N/A
N/A

ARKANSAS HIGHWAY AND TRANSPORTATION DEPARTMENT
ARKANSAS TOURIST INFORMATION CENTER
(WHITE RIVER) (S)
JOB 061451

MAINTENANCE BUILDING
FLOOR PLAN

Sheet Reference Number:
A-121

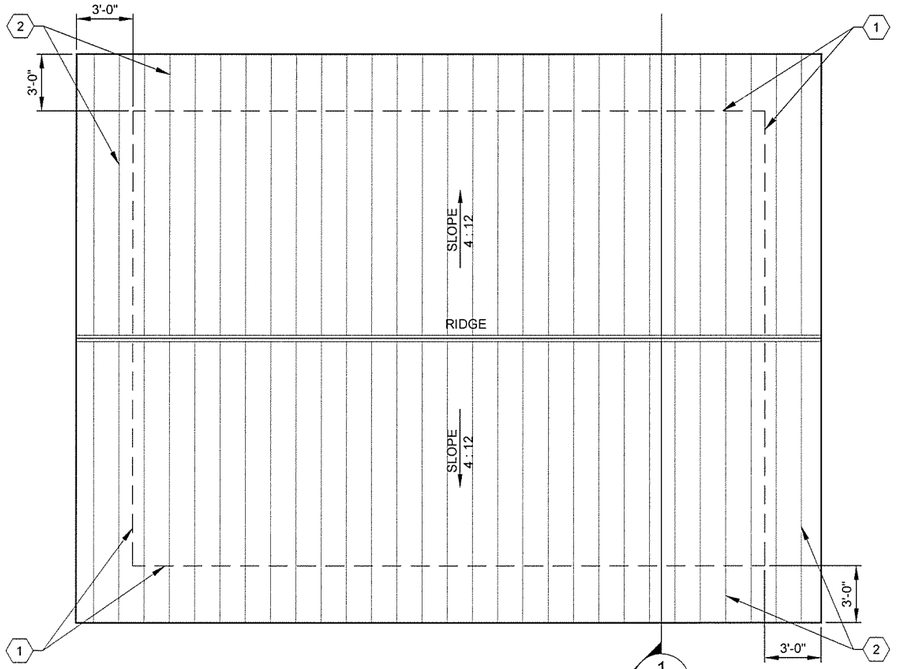


PLAN NORTH

1 / A-122 ROOF PLAN
SCALE: 1/4" = 1'-0"

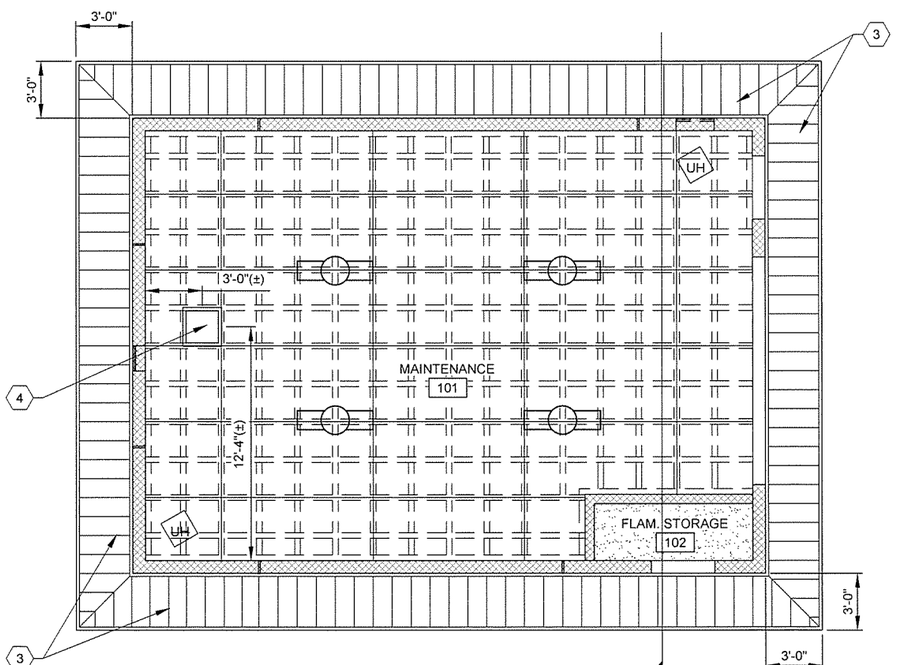


PLAN NORTH

2 / A-122 REFLECTED CEILING PLAN
SCALE: 1/4" = 1'-0"

## GENERAL NOTES

1. ALL DIMENSIONS TO FACE OF CMU UNLESS NOTED OTHERWISE
2. SEE CIVIL SHEETS FOR ORIENTATION OF BUILDING ON SITE
3. SEE SHEET A-002 FOR MATERIAL AND COLOR LEGENDS

## KEYED NOTES

1. DASHED LINE INDICATES WALL BELOW OR ROOF EDGE ABOVE
2. PRE-FINISHED METAL ROOF - RP1
3. PRE-FINISHED METAL SOFFIT - PERFORATED - MS1
4. 20" x 20" LIFT-OUT CEILING ACCESS PANEL. ADJUST FINAL LOCATION TO FIT CEILING FRAMING

## LEGEND

- CONCRETE CEILING, PAINT FINISH, SEE FINISH SCHEDULE
- 4' x 8' MOISTURE RESISTANT GYPSUM BOARD CEILING, SEE FINISH SCHEDULE
- METAL FRAMINGABOVE, SEE WALL SECTIONS
- 2 X 4 SURFACE MOUNTED FLUORESCENT LIGHT FIXTURE
- E EXIT FIXTURE
- UH UNIT HEATER, SEE MECHANICAL DRAWINGS

0 2' 4' 8' 12'
SCALE: 1/4" = 1'-0"

GARVER
4701 Northshore Drive
N Little Rock, AR 72118
501-376-3633
www.GarverUSA.com

REGISTERED ARCHITECT
Garver, LLC
License No. LL111
STATE OF ARKANSAS

REGISTERED ARCHITECT
Greg A. Archer
License No. 2874
STATE OF ARKANSAS

| Symbol | Description | Date | Appr. |
|---|---|---|---|
| IFC | ISSUED FOR CONSTRUCTION | 10/1/15 | JRR |

Designed by: J RAMSEY
Drawn by: J RAMSEY
Checked by: G ARCHER
Submitted by: John T. Walkins, III, PE, SE, Director - Facilities Services
Plot Date: 10/1/15
Plot Scale: 1:1
Dwg Code: .
File Name: AHTSVR-A-122 DWG
Job Number: 060451
N/A
N/A
N/A

ARKANSAS HIGHWAY AND TRANSPORTATION DEPARTMENT
ARKANSAS TOURIST INFORMATION CENTER
(WHITE RIVER) (S)
JOB 061451

MAINTENANCE BUILDING
REFLECTED CEILING AND ROOF PLANS

Sheet Reference Number:
A-122

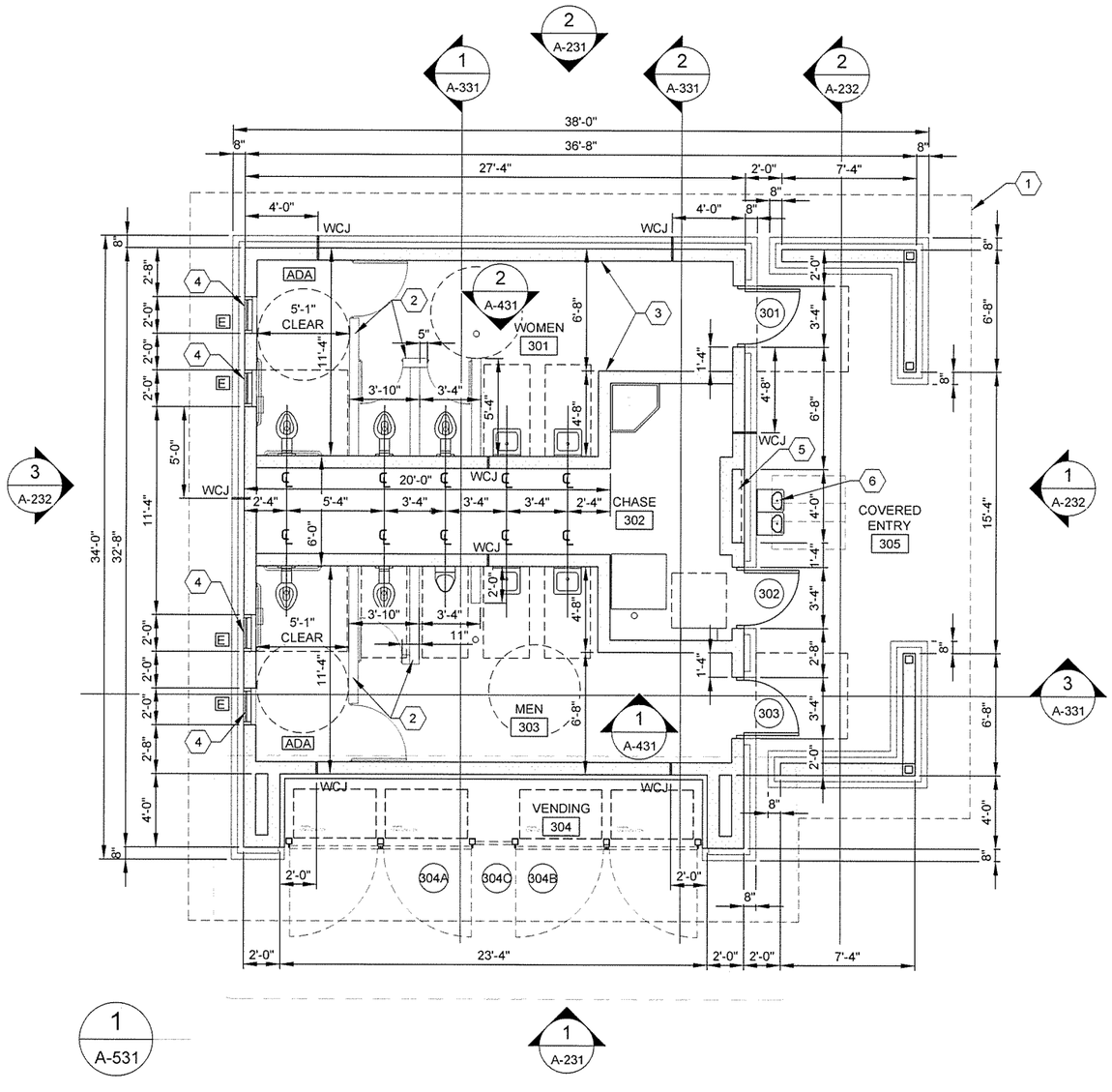


## GENERAL NOTES

1. ALL DIMENSIONS TO FACE OF CMU UNLESS NOTED OTHERWISE
2. SEE CIVIL SHEETS FOR ORIENTATION OF BUILDING ON SITE
3. SEE SHEET A-002 FOR MATERIAL AND COLOR LEGENDS

## KEYED NOTES

1. DASHED LINE INDICATES ROOF OVERHANG ABOVE
2. 6" CMU DIVIDER WALL
3. 8" CMU WALL
4. ALUMINUM WINDOWS, HIGH,. WITH FROSTED GLAZING, SEE ELEVATIONS, SHEET A-004
5. RECESSED DISPLAY BOARD, SEE ALLOWANCE NO.1; SECTION 012100 - ALLOWANCES
6. ADA COMPLIANT DRINKING FOUNTAIN, SEE PLUMBING

## LEGEND

- (100) DOOR NUMBERS
- [A] WINDOW SYMBOLS
- ADA FLOOR CLEARANCES
- FE FIRE EXTINGUISHER AND SEMI-RECESSED CABINET
- FD FLOOR DRAIN
- [ADA] ADA COMPLIANT STALL
- WCJ WALL CONTROL JOINT, CMU AND MANUFACTURED STONE MASONRY

0 2' 4' 8' 12'
SCALE: 1/4" = 1'-0"

PLAN NORTH

1 A-131

# FLOOR PLAN

SCALE: 1/4" = 1'-0"


GARVER
4701 Northshore Drive
N Little Rock, AR 72118
501-376-3633
www.GarverUSA.com


REGISTERED ARCHITECT Garver, LLC License No. LL111 STATE OF ARKANSAS

REGISTERED ARCHITECT Greg A. Archer License No. 2871 STATE OF ARKANSAS

| Symbol | Description | Date | Appr. |
|---|---|---|---|
| IFC | ISSUED FOR CONSTRUCTION | 10/1/15 | JRR |

Job Number 060451
Submitted by John T. Vaikins, III, PE, SE Director, Facilities Services
Designed by J. RAMSEY
Drawn by J. RAMSEY
Checked by G. ARCHER
Plot Date: 10/1/15
Plot Scale: 1:1
Dwg Code: -
File Name: AH15WR-A-131.DWG

ARKANSAS HIGHWAY AND TRANSPORTATION DEPARTMENT
ARKANSAS TOURIST INFORMATION CENTER
(WHITE RIVER) (S)
JOB 061451

TRUCKER-VENDING BUILDING FLOOR PLAN

Sheet Reference Number:
A-131

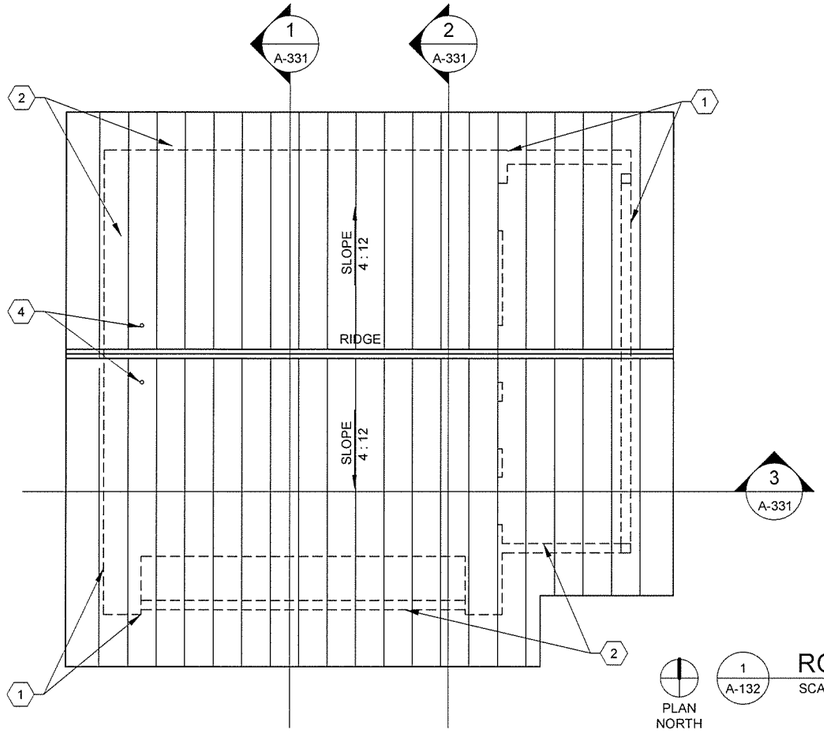


1 A-132 ROOF PLAN
SCALE: 3/16" = 1'-0"

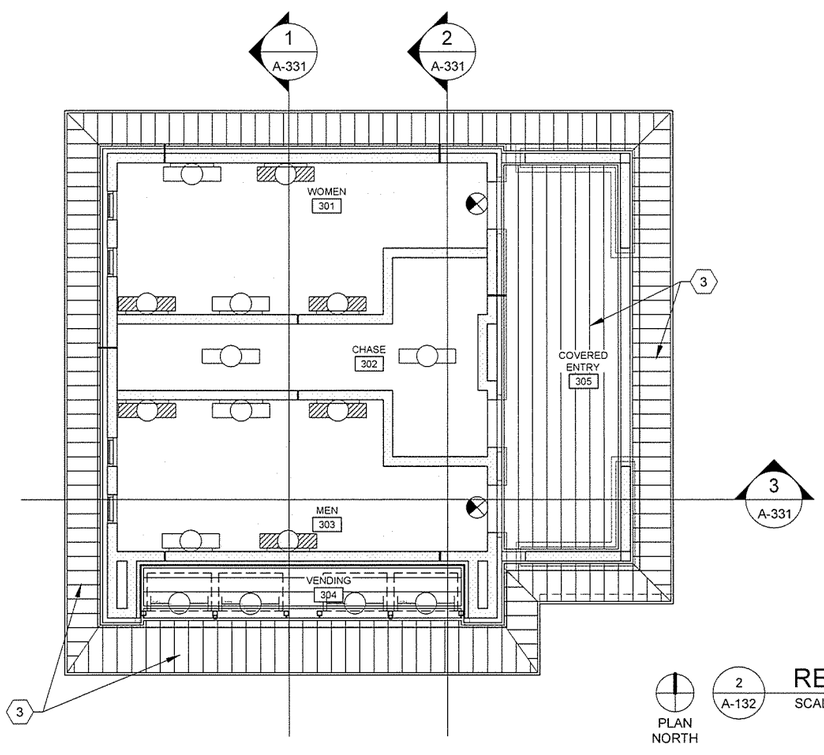


2 A-132 REFLECTED CEILING PLAN
SCALE: 3/16" = 1'-0"

## GENERAL NOTES

1. ALL DIMENSIONS TO FACE OF CMU UNLESS NOTED OTHERWISE
2. SEE CIVIL SHEETS FOR ORIENTATION OF BUILDING ON SITE
3. SEE SHEET A-002 FOR MATERIAL AND COLOR LEGENDS

## KEYED NOTES

1. DASHED LINE INDICATES WALL BELOW OR ROOF EDGE ABOVE
2. PRE-FINISHED METAL ROOF - RP1
3. PRE-FINISHED METAL SOFFIT - PERFORATED - MS1
4. VENT-THRU-ROOF, SEE PLUMBING

## LEGEND

- MOISTURE RESISTANT GYPSUM BOARD CEILING, SEE FINISH SCHEDULE
- PREFINISHED METAL SOFFIT - PERFORATED, MS1
- NO CEILING - EXPOSED STRUCTURE
- 2 X 4 WALL MOUNTED FLUORESCENT LIGHT FIXTURE
- 2 X 4 WALL MOUNTED FLUORESCENT EMERGENCY LIGHT FIXTURE
- 2 X 4 PENDANT MOUNTED FLUORESCENT LIGHT FIXTURE
- EXIT FIXTURE
- SURFACE MOUNTED FLUORESCENT FIXTURE
- RETURN GRILLE
- SUPPLY GRILLE

0 2' 4' 10' 16'
SCALE: 3/16" = 1'-0"


GARVER
4701 Northshore Drive
N Little Rock, AR 72118
501-376-3633
www.GarverUSA.com


REGISTERED ARCHITECT
Garver, LLC
License No. LL111
STATE OF ARKANSAS

REGISTERED ARCHITECT
Greg A. Archer
License No. 2671
10/1/15
STATE OF ARKANSAS

| IFC Symbol | ISSUED FOR CONSTRUCTION Description | 10/1/15 Date | JRR Appr |
|---|---|---|---|

Designed by: J. RAMSEY
Drawn by: J. RAMSEY
Checked by: G. ARCHER
Submitted by: John T. Watkins, III, PE, SE Director, Federal Services
Plot Date: 10/1/15
Plot Scale: 1:1
Drwg Code: -
File Name: AH15WR-A-132.DWG
Job Number: 060451
N/A
N/A
N/A

ARKANSAS HIGHWAY AND TRANSPORTATION DEPARTMENT
ARKANSAS TOURIST INFORMATION CENTER
(WHITE RIVER) (S)
JOB 061451

TRUCKER-VENDING BUILDING
ROOF AND REFLECTED CEILING PLANS

Sheet Reference Number:
A-132

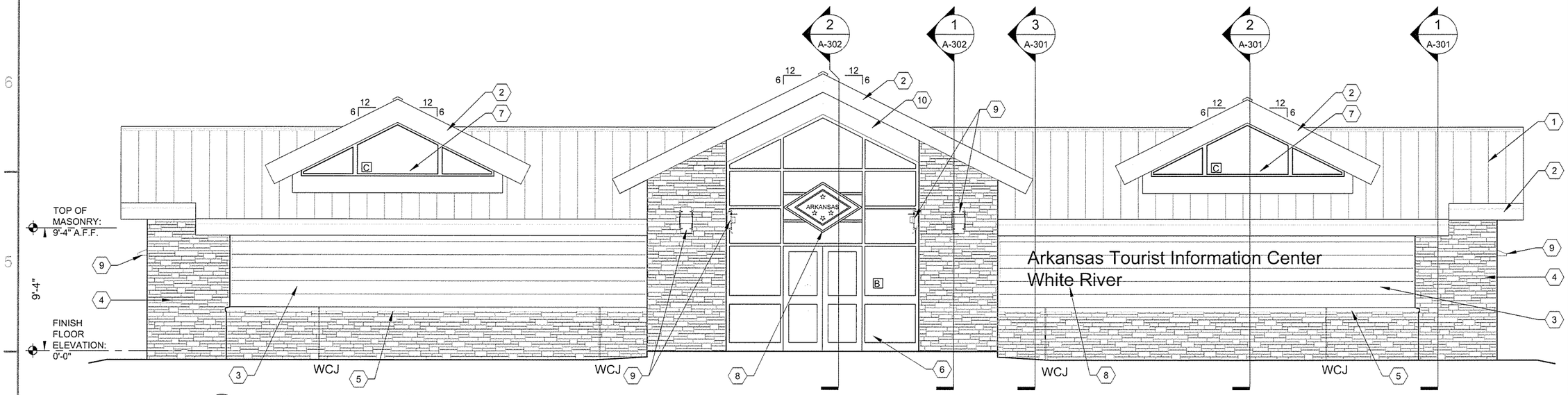


1 A-201 FRONT ELEVATION
SCALE: 1/4" = 1'-0"

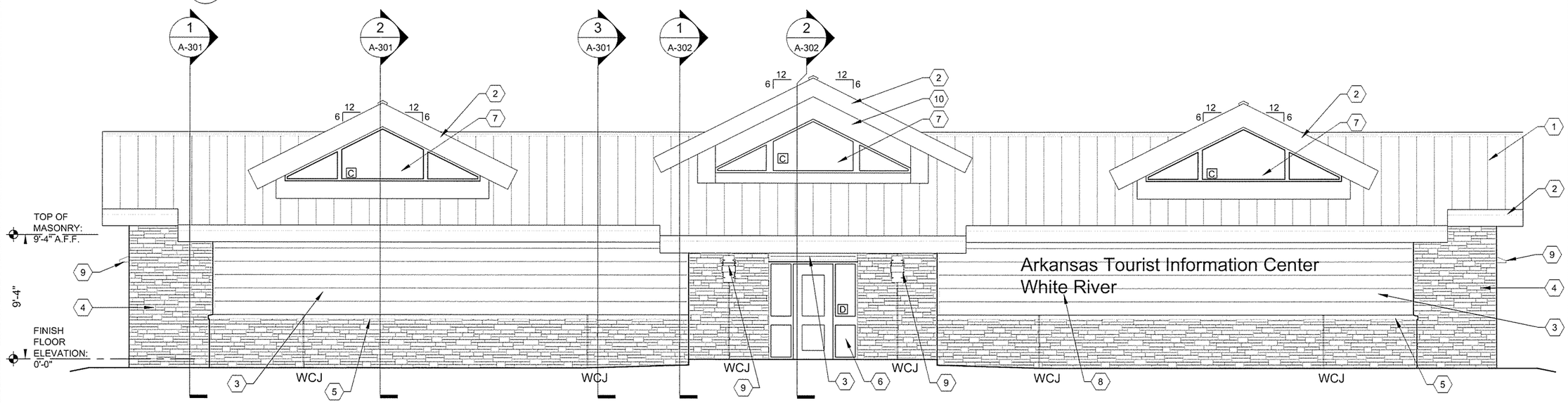


2 A-201 BACK ELEVATION
SCALE: 1/4" = 1'-0"

## GENERAL NOTES

1. SEE CIVIL SHEETS FOR FINAL GRADE AT EACH BUILDING ON SITE
2. SEE SHEET A-002 FOR MATERIAL AND COLOR LEGENDS

## KEYED NOTES

1. PRE-FINISHED METAL ROOF - RP1
2. PRE-FINISHED METAL TRIM FASCIA - MT1
3. PRE-FINISHED METAL SIDING - WS1
4. MANUFACTURED STONE MASONRY - SW1
5. MANUFACTURED STONE MASONRY CAP - SW2
6. ALUMINUM STOREFRONT- SF1
7. ALUMINUM WINDOWS - WD1
8. BUILDING SIGNAGE, SEE ALLOWANCE NO. 1; SECTION 012100 - ALLOWANCES
9. LIGHT FIXTURE, SEE ELECTRICAL
10. PRE-FINISHED METAL WALL PANEL - MT2

## LEGEND

WCJ WALL CONTROL JOINT, CMU AND MANUFACTURED STONE MASONRY

0 2' 4' 8' 12'
SCALE: 1/4" = 1'-0"

GARVER
4701 Northshore Drive
N Little Rock, AR 72118
501-376-3633
www.GarverUSA.com

REGISTERED ARCHITECT Garver, LLC License No. LL111 STATE OF ARKANSAS

REGISTERED ARCHITECT Greg A. Archer License No. 2621 STATE OF ARKANSAS
10/1/15

| Symbol | Description | Date | Appr. |
|---|---|---|---|
| IFC | ISSUED FOR CONSTRUCTION | 10/1/15 | JRR |

Submitted by: John T. Wallace, III, PE, SE, Director, Federal Services
Job Number: 060451
Plot Scale: 1:1 — N/A
Plot Date: 10/12/15 — N/A
Dwg Code: - — N/A
Designed by: J RAMSEY
Drawn by: J RAMSEY
Checked by: G. ARCHER
File Name: AH15WR-A-201.DWG

ARKANSAS HIGHWAY AND TRANSPORTATION DEPARTMENT
ARKANSAS TOURIST INFORMATION CENTER
(WHITE RIVER) (S)
JOB 061451

TOURIST INFORMATION CENTER
BUILDING ELEVATIONS

Sheet Reference Number:
A-201

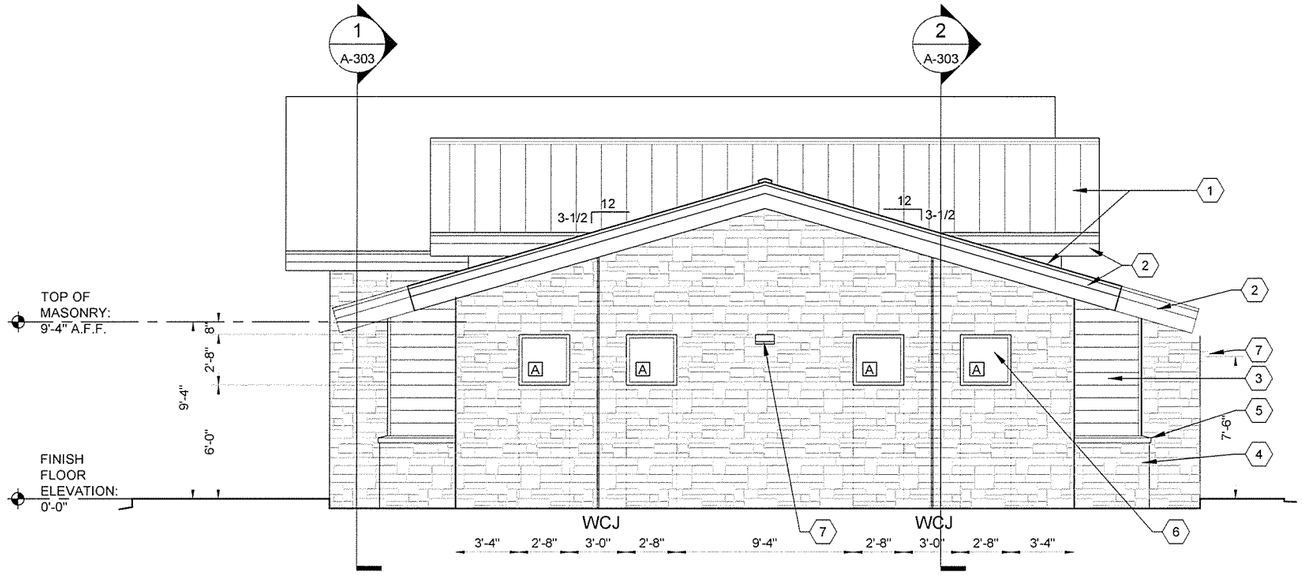


1 A-202 END ELEVATION

SCALE: 1/4" = 1'-0"

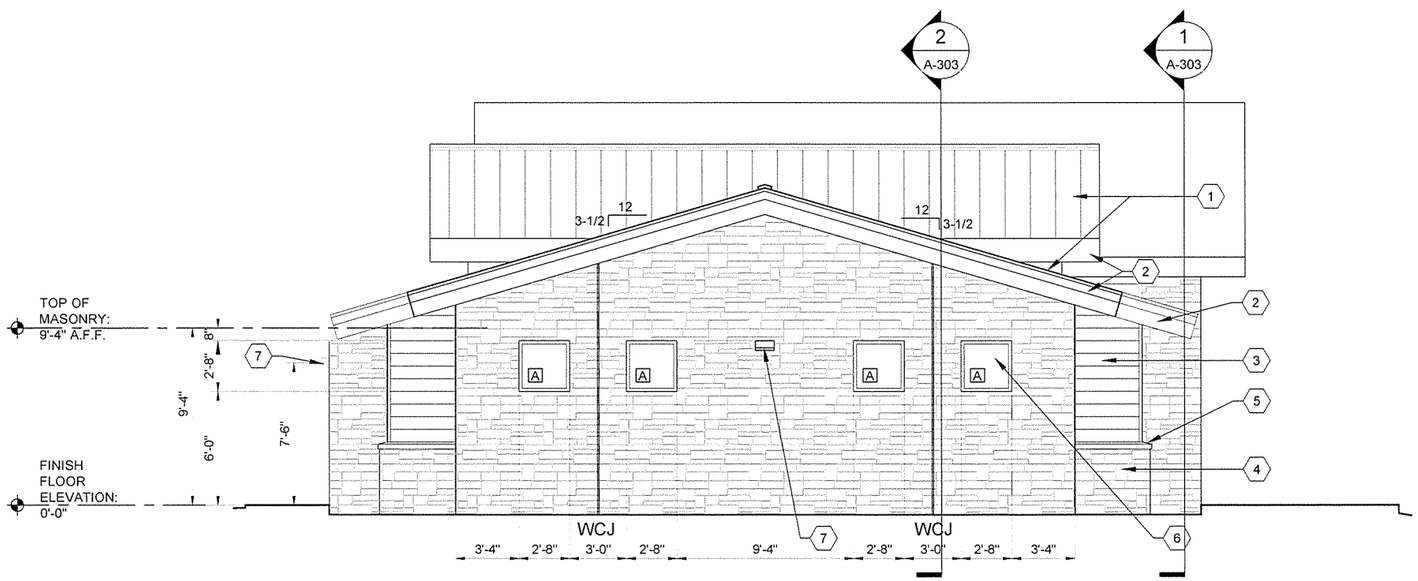


2 A-202 END ELEVATION

SCALE: 1/4" = 1'-0"

## GENERAL NOTES

1. SEE CIVIL SHEETS FOR FINAL GRADE AT EACH BUILDING ON SITE
2. SEE SHEET A-002 FOR MATERIAL AND COLOR LEGENDS

## KEYED NOTES

1. PRE-FINISHED METAL ROOF - RP1
2. PRE-FINISHED METAL TRIM FASCIA - MT1
3. PRE-FINISHED METAL SIDING - WS1
4. MANUFACTURED STONE MASONRY - SW1
5. MANUFACTURED STONE MASONRY CAP - SW2
6. ALUMINUM WINDOWS - WD1
7. LIGHTING, SEE ELECTRICAL DRAWINGS

## LEGEND

| | |
|---|---|
| WCJ | WALL CONTROL JOINT, CMU AND MANUFACTURED STONE MASONRY |


GARVER
4701 Northshore Drive
N Little Rock, AR 72118
501-376-3633
www.GarverUSA.com


REGISTERED ARCHITECT Garver, LLC License No. LL111 STATE OF ARKANSAS

REGISTERED ARCHITECT Greg A. Archer License No. 2671 STATE OF ARKANSAS

| Symbol | Description | Date | Appr. |
|---|---|---|---|
| IFC | ISSUED FOR CONSTRUCTION | 10/1/15 | JRR |

| | | | |
|---|---|---|---|
| Designed by J RAMSEY | Submitted by John T. Watkins, III, PE, SE Director, Federal Services | Job Number 050451 | |
| Drawn by J RAMSEY | Plot Date 10/1/15 | Plot Scale 1:1 | N/A . |
| Checked by G. ARCHER | Dwg Code . | | N/A . |
| File Name AH15WR-A-202 DWG | | | N/A . |

ARKANSAS HIGHWAY AND TRANSPORTATION DEPARTMENT
ARKANSAS TOURIST INFORMATION CENTER (WHITE RIVER) (S)
JOB 051451

TOURIST INFORMATION CENTER BUILDING ELEVATIONS

Sheet Reference Number:

A-202



0 2' 4' 8' 12'
SCALE: 1/4" = 1'-0"

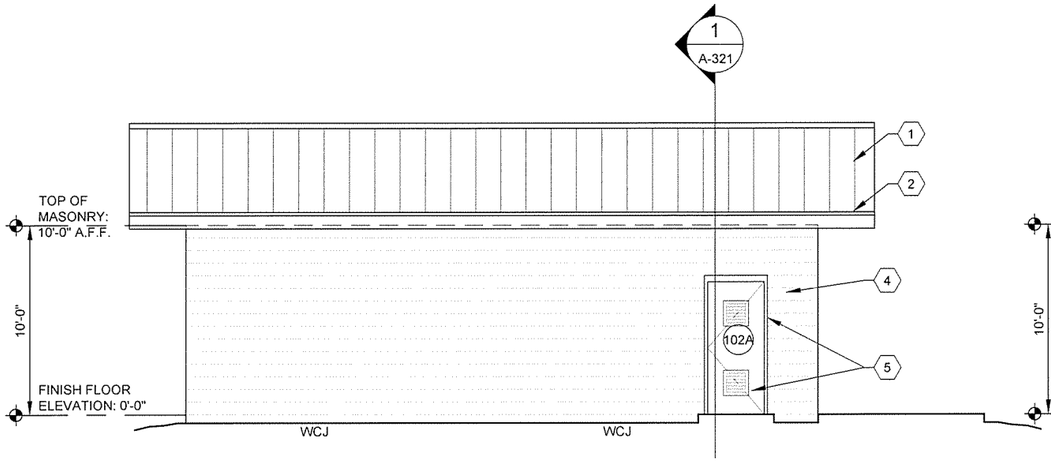


1 A-221 SIDE ELEVATION
SCALE: 1/4" = 1'-0"

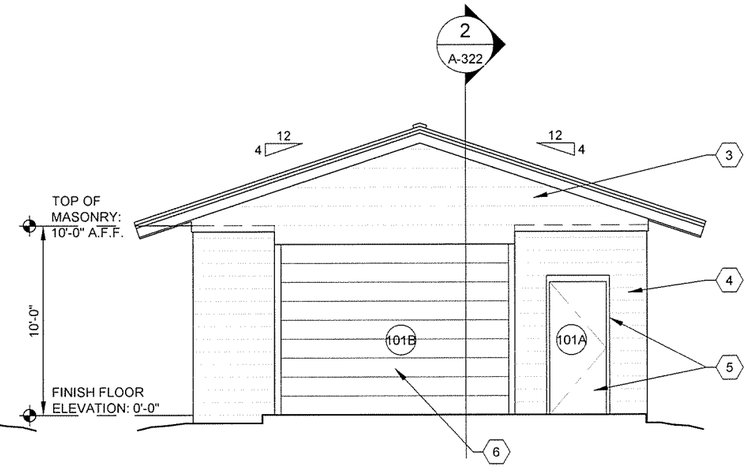


3 A-221 END ELEVATION
SCALE: 1/4" = 1'-0"

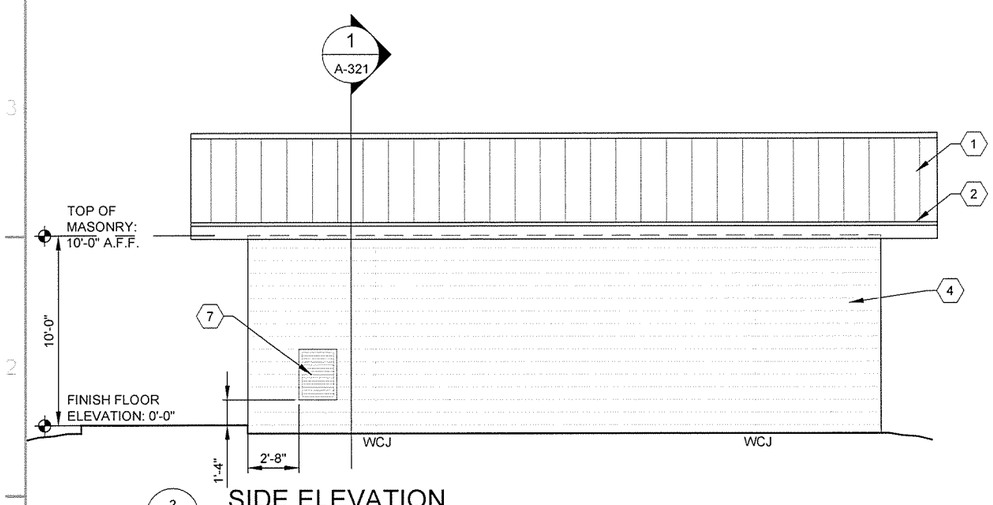


2 A-221 SIDE ELEVATION
SCALE: 1/4" = 1'-0"

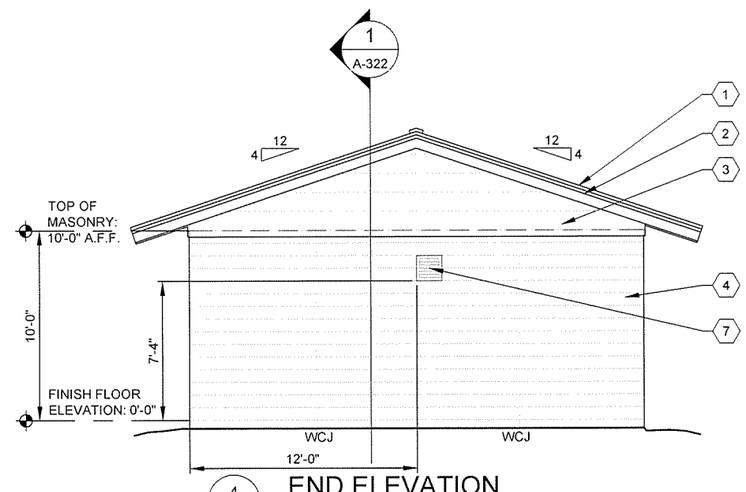


4 A-221 END ELEVATION
SCALE: 1/4" = 1'-0"

## GENERAL NOTES

1. ALL DIMENSIONS TO FACE OF CMU UNLESS NOTED OTHERWISE
2. SEE CIVIL SHEETS FOR ORIENTATION OF BUILDING ON SITE
3. SEE SHEET A-002 FOR MATERIAL AND COLOR LEGENDS

## KEYED NOTES

1. PRE-FINISHED METAL ROOF - RP1
2. PRE-FINISHED METAL TRIM FASCIA - MT1
3. PRE-FINISHED METAL SIDING - WS1
4. 8" CMU, INTEGRAL WATER REPELLANT, PAINT AND SEALER
5. HOLLOW METAL DOOR AND FRAME - EPT1 & EPT2
6. OVERHEAD SECTIONAL DOOR - OHD1
7. LOUVER, SEE MECHANICAL DRAWINGS

## LEGEND

100 DOOR NUMBERS

WCJ WALL CONTROL JOINT

0 2' 4' 8' 12'
SCALE: 1/4" = 1'-0"


GARVER
4701 Northshore Drive
N Little Rock, AR 72118
501-376-3633
www.GarverUSA.com


REGISTERED ARCHITECT
Garver, LLC
License No. LL111
STATE OF ARKANSAS

REGISTERED ARCHITECT
Greg A. Archer
License No. 2874
STATE OF ARKANSAS
10/1/15

| Symbol | Description | Date | Appr. |
|---|---|---|---|
| IFC | ISSUED FOR CONSTRUCTION | 10/1/15 | JRR |

Job Number 060451
Submitted by John T. Watkins, III, PE, SE Director, Federal Services
Designed by J. RAMSEY
Drawn by J. RAMSEY
Plot Date 10/1/15
Plot Scale 1:1
Checked by G. ARCHER
Dwg Code -
File Name AH15WR-A-221.DWG

ARKANSAS HIGHWAY AND TRANSPORTATION DEPARTMENT
ARKANSAS TOURIST INFORMATION CENTER
(WHITE RIVER) (S)
JOB 051451

MAINTENANCE BUILDING ELEVATIONS

Sheet Reference Number:
A-221

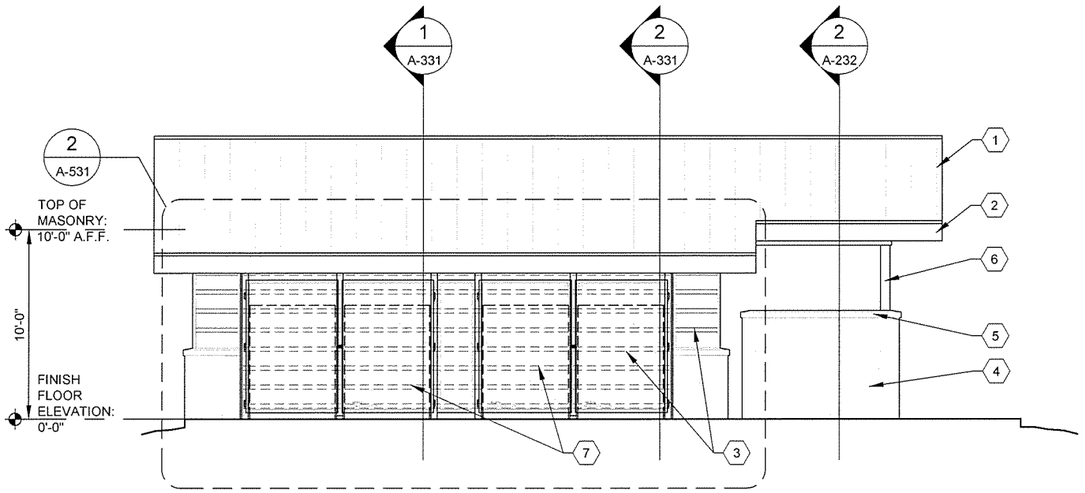


1 A-231 SIDE ELEVATION
SCALE: 1/4" = 1'-0"

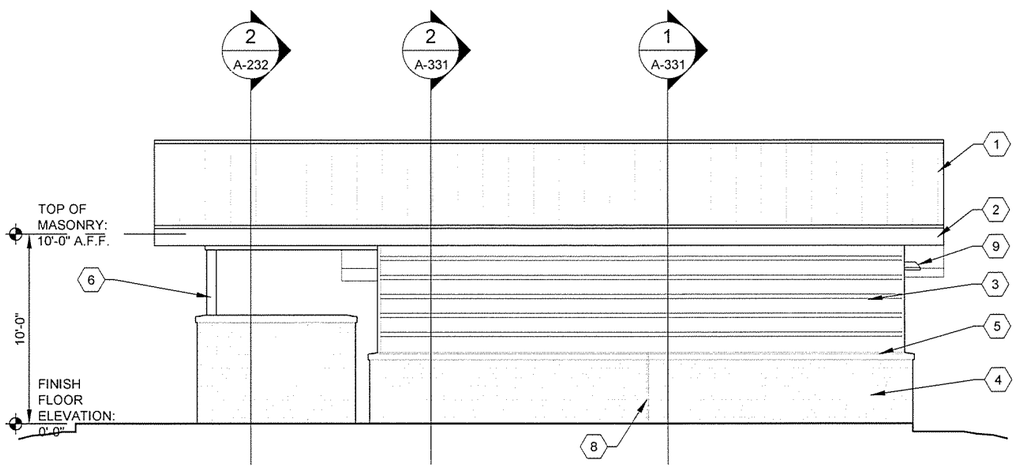


2 A-231 SIDE ELEVATION
SCALE: 1/4" = 1'-0"

## GENERAL NOTES

1. SEE CIVIL SHEETS FOR FINAL GRADE AT EACH BUILDING ON SITE
2. SEE SHEET A-002 FOR MATERIAL AND COLOR LEGENDS

## KEYED NOTES

1. PRE-FINISHED METAL ROOF - RP1
2. PRE-FINISHED METAL TRIM FASCIA - MT1
3. PRE-FINISHED METAL SIDING - WS1
4. MANUFACTURED STONE
5. MANUFACTURED STONE CAP
6. COLUMN, SEE STRUCTURAL - EPT1
7. VENDING SECURITY GATE AND FRAME - PT6
8. WALL CONTROL JOINT, CMU AND MANUFACTURED STONE MASONRY
9. LIGHT FIXTURE, SEE ELECTRICAL

0 2' 4' 8' 12'
SCALE: 1/4" = 1'-0"


GARVER
4701 Northshore Drive
N Little Rock, AR 72118
501-376-3633
www.GarverUSA.com


REGISTERED ARCHITECT
Garver, LLC
License No. LL111
STATE OF ARKANSAS

REGISTERED ARCHITECT
Greg A. Archer
License No. 2673
10/1/15
STATE OF ARKANSAS

| IFC Symbol | ISSUED FOR CONSTRUCTION Description | 10/1/15 Date | JRR Appr |
|---|---|---|---|

Job Number 060451
Submitted by John T. Watkins, III, P.E., SE Director, Federal Services
Plot Date 10/1/15
Plot Scale 1:1
Designed by J. RAMSEY
Drawn by J. RAMSEY
Checked by G. ARCHER
Drwg Code -
File Name AH15WR-A-231 DWG

ARKANSAS HIGHWAY AND TRANSPORTATION DEPARTMENT
ARKANSAS TOURIST INFORMATION CENTER
(WHITE RIVER) (S)
JOB 061451

TRUCKER-VENDING BUILDING
BUILDING ELEVATIONS

Sheet Reference Number:
A-231

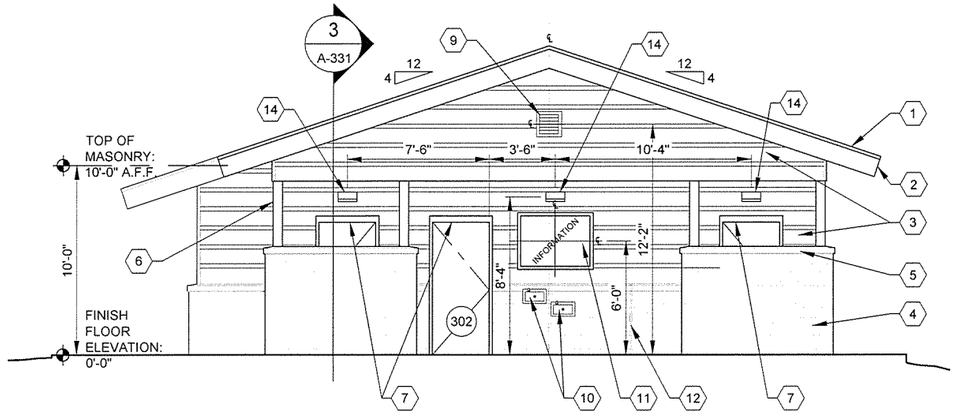


1 A-232 END ELEVATION
SCALE: 1/4" = 1'-0"

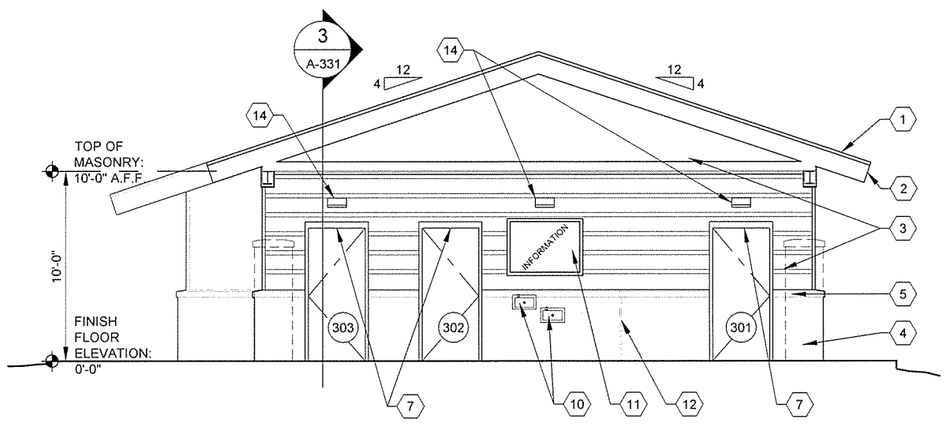


2 A-232 SECTION/END ELEVATION
SCALE: 1/4" = 1'-0"

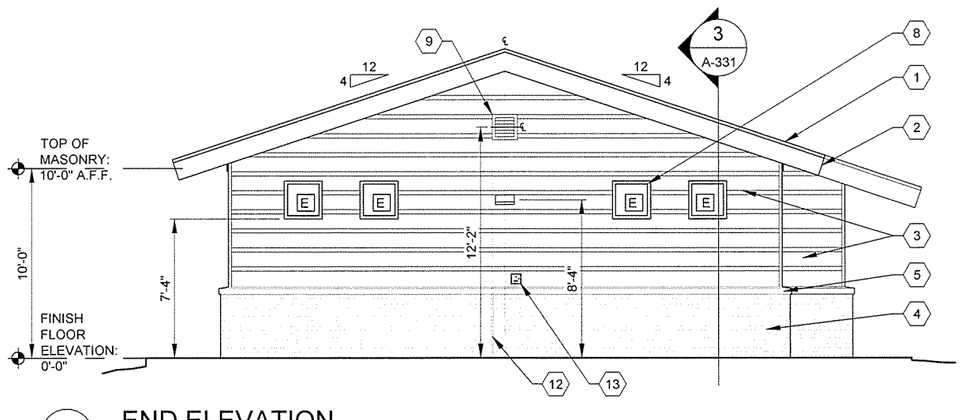


3 A-232 END ELEVATION
SCALE: 1/4" = 1'-0"

## GENERAL NOTES

1. SEE CIVIL SHEETS FOR FINAL GRADE AT EACH BUILDING ON SITE
2. SEE SHEET A-002 FOR MATERIAL AND COLOR LEGENDS

## KEYED NOTES

1. PRE-FINISHED METAL ROOF - RP1
2. PRE-FINISHED METAL TRIM FASCIA - MT1
3. PRE-FINISHED METAL SIDING - WS1
4. MANUFACTURED STONE
5. MANUFACTURED STONE CAP
6. COLUMN, SEE STRUCTURAL - EPT1
7. HOLLOW METAL DOOR AND FRAME - EPT1 & EPT2
8. ALUMINUM WINDOWS, HIGH, SEE ELEVATIONS
9. LOUVER, SEE MECHANICAL DRAWINGS
10. ADA COMPLIANT DRINKING FOUNTAIN, SEE PLUMBING
11. RECESSED SIGNAGE BOARD, SEE ALLOWANCE NO. 1; SECTION 012100 - ALLOWANCES
12. WALL CONTROL JOINT, CMU AND MANUFACTURED STONE MASONRY
13. WALL HYDRANT, SEE PLUMBING
14. LIGHT FIXTURE, SEE ELECTRICAL

0 2' 4' 8' 12'
SCALE: 1/4" = 1'-0"


GARVER
4701 Northshore Drive
N Little Rock, AR 72118
501-376-3633
www.GarverUSA.com


REGISTERED ARCHITECT
Garver, LLC
License No. LL111
STATE OF ARKANSAS

REGISTERED ARCHITECT
Greg A. Archer
License No. 26714
10/1/15
STATE OF ARKANSAS

| IFC Symbol | ISSUED FOR CONSTRUCTION Description | 10/1/15 Date | JRR Appr. |
|---|---|---|---|

Job Number 060451
Submitted by: John T. Watkins, III, PE, SE Director, Federal Services
Designed by: J. RAMSEY
Drawn by: J. RAMSEY
Plot Date: 10/1/15
Plot Scale: 1:1
Checked by: G. ARCHER
Dwg Code: -
File Name: AH15WR-A-232.DWG
N/A
N/A
N/A

ARKANSAS HIGHWAY AND TRANSPORTATION DEPARTMENT
ARKANSAS TOURIST INFORMATION CENTER
(WHITE RIVER) (S)
JOB 061451

TRUCKER-VENDING BUILDING
BUILDING ELEVATIONS

Sheet Reference Number:
A-232

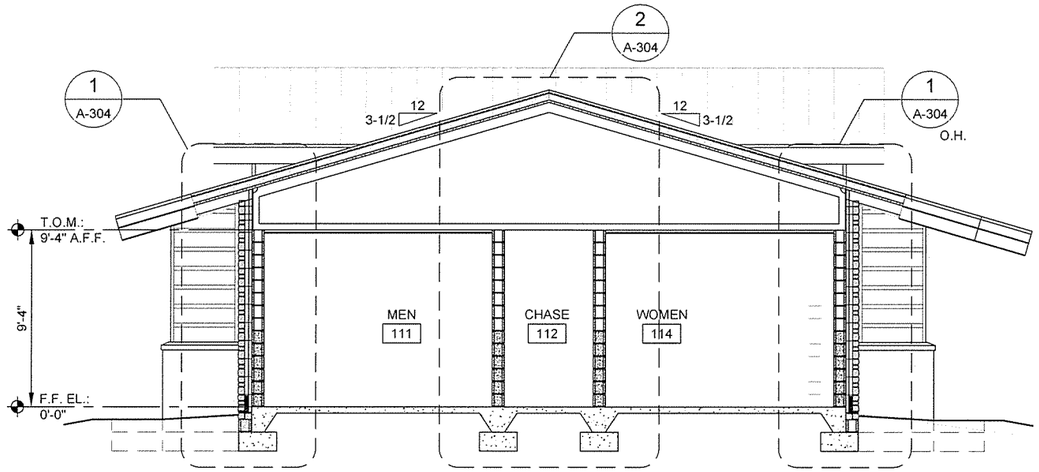


1 A-301 BUILDING SECTION
SCALE: 1/4" = 1'-0"

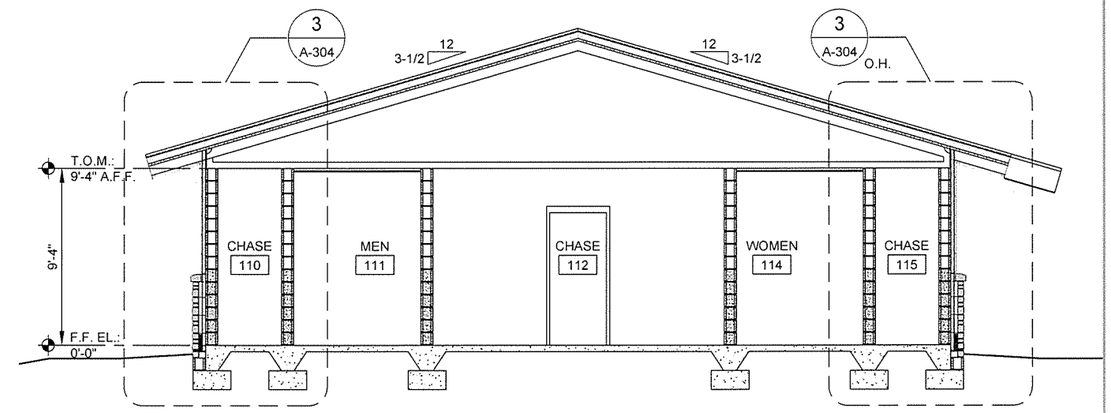


3 A-301 BUILDING SECTION
SCALE: 1/4" = 1'-0"

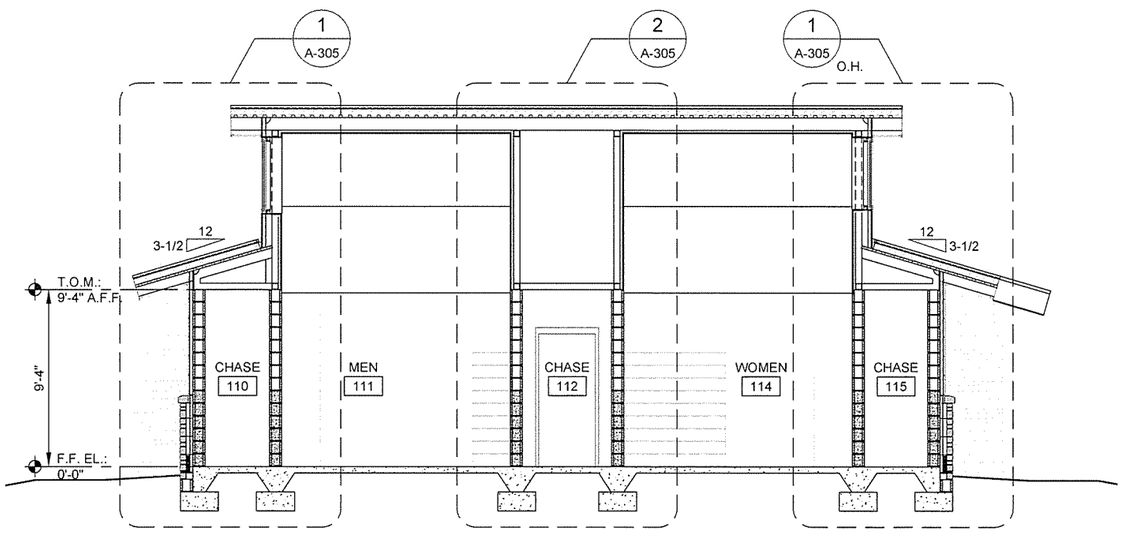


2 A-301 BUILDING SECTION
SCALE: 1/4" = 1'-0"

0 2' 4' 8' 12'
SCALE: 1/4" = 1'-0"

GARVER
4701 Northshore Drive
N Little Rock, AR 72118
501-376-3633
www.GarverUSA.com

REGISTERED ARCHITECT
Garver, LLC
License No. LL111
STATE OF ARKANSAS

REGISTERED ARCHITECT
Greg A. Archer
License No. 2671
10/1/15
STATE OF ARKANSAS

| Symbol | Description | Date | Appr |
|---|---|---|---|
| IFC | ISSUED FOR CONSTRUCTION | 10/1/15 | JRR |

Designed by: J RAMSEY
Drawn by: J RAMSEY
Checked by: G ARCHER
Submitted by: John T. Watkins, III, PE, SE, Director, Federal Services
Plot Date: 10/1/15
Plot Scale: 1:1
Dwg Code: -
File Name: AH15WR-A-301 DWG
Job Number: 060451
N/A
N/A
N/A

ARKANSAS HIGHWAY AND TRANSPORTATION DEPARTMENT
ARKANSAS TOURIST INFORMATION CENTER
(WHITE RIVER) (S)
JOB 061451

TOURIST INFORMATION CENTER
BUILDING SECTIONS

Sheet Reference Number:
A-301

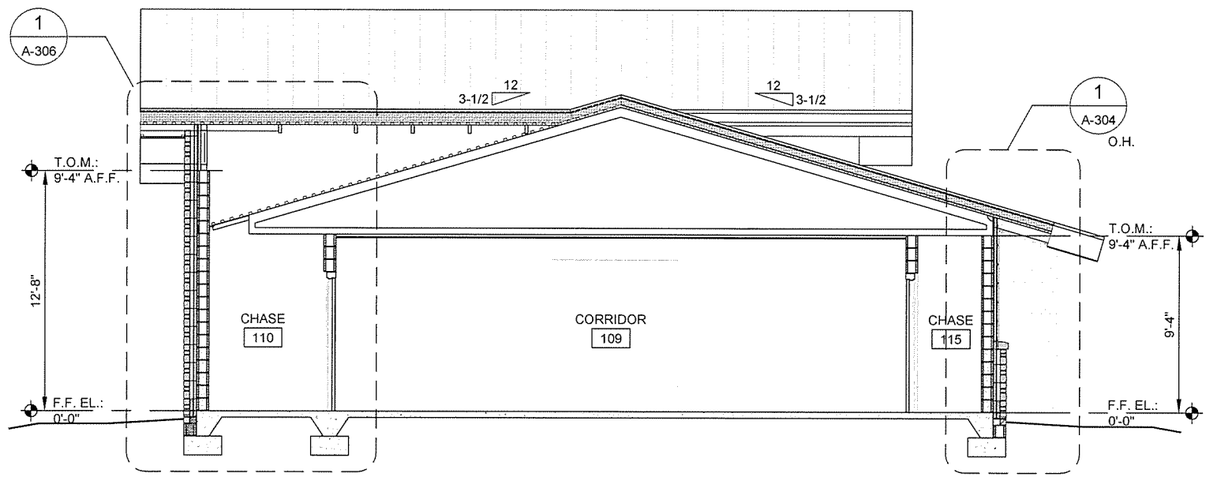


1 A-302 BUILDING SECTION

SCALE: 1/4" = 1'-0"

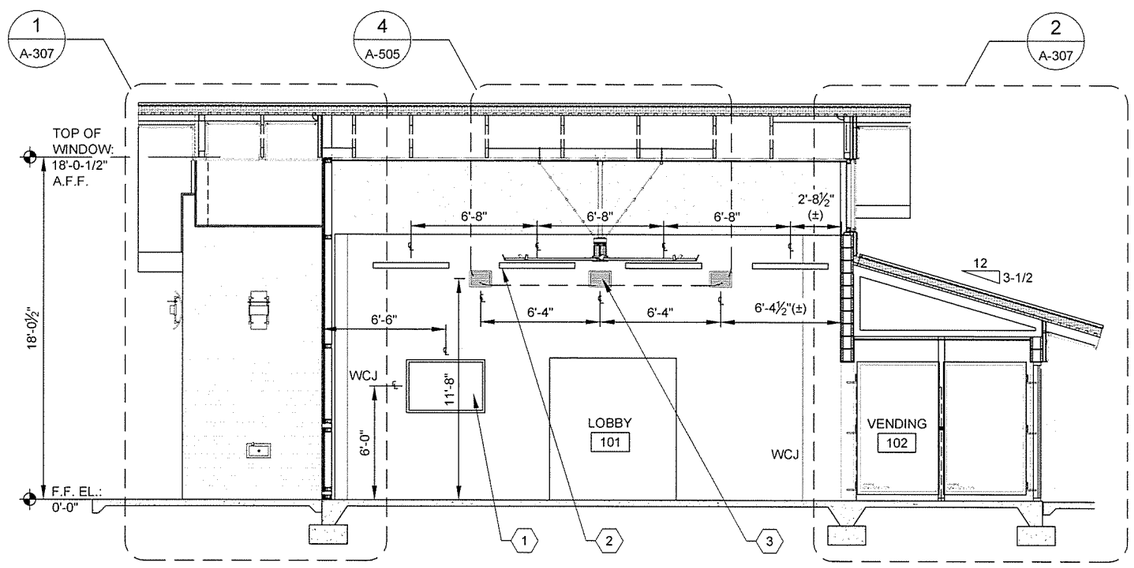


2 A-302 BUILDING SECTION

SCALE: 1/4" = 1'-0"

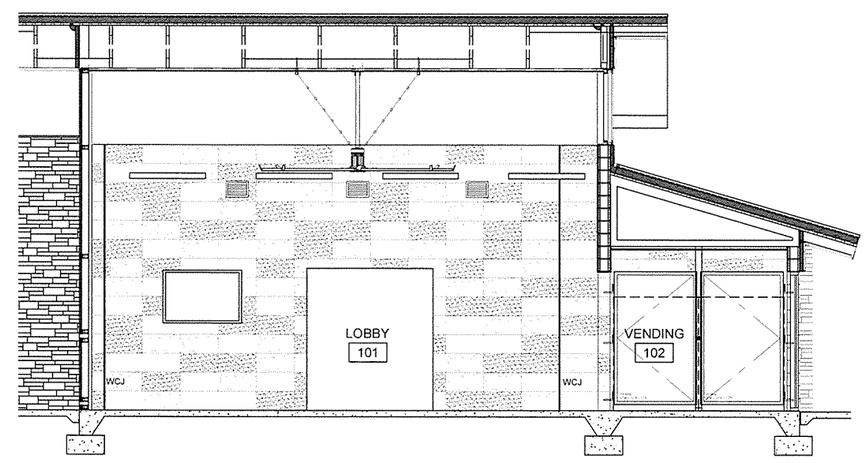


3 A-302 LOBBY WALL TILE DIAGRAM

SCALE: 1/4" = 1'-0"

0 2' 4' 8' 12'

SCALE: 1/4" = 1'-0"

## KEYED NOTES

1. WALL-MOUNTED MONITOR SECURITY CABINET, SEE ALLOWANCE NO. 2, SECTION 012100 - ALLOWANCES. CONFIRM FINAL MOUNTING HEIGHT WITH OWNER/ARCHITECT.
2. LIGHT FIXTURE, SEE ELECTRICAL
3. HVAC SUPPLY GRILLE, SEE MECHANICAL

## LEGEND

- CERAMIC WALL TILE, T1, 40% OF BLEND
- CERAMIC WALL TILE, T2, 30% OF BLEND
- CERAMIC WALL TILE, T3, 30% OF BLEND


GARVER
4701 Northshore Drive
N Little Rock, AR 72118
501-376-3533
www.GarverUSA.com


REGISTERED ARCHITECT Garver, LLC License No. LL111 STATE OF ARKANSAS

REGISTERED ARCHITECT Gene A. Archer License No. 2874 STATE OF ARKANSAS 10/1/15

| IPC Symbol | Description | Date | Appr. |
|---|---|---|---|
| | ISSUED FOR CONSTRUCTION | 10/1/15 | JRR |

| | | | |
|---|---|---|---|
| Designed by J RAMSEY | Submitted by John T. Watkins, III, PE, SE Director, Federal Services | Job Number 060451 | |
| Drawn by J RAMSEY | Plot Date 10/1/15 | Plot Scale 1:1 | N/A |
| Checked by G ARCHER | Dwg Code: | N/A | |
| File Name: AH15WR-A-302.DWG | | N/A | |

ARKANSAS HIGHWAY AND TRANSPORTATION DEPARTMENT
ARKANSAS TOURIST INFORMATION CENTER
(WHITE RIVER) (S)
JOB 061451

TOURIST INFORMATION CENTER
BUILDING SECTIONS

Sheet Reference Number:

A-302

Sheet 50 of 130

## KEYED NOTES

1. CEILING FAN- PROVIDE 3 ADDITIONAL SAFETY ANCHORS PER MANUFACTURER'S RECOMMENDATION
2. ARKANSAS "DIAMOND" SIGN, SEE ALLOWANCE NO. 1; SECTION 012100 - ALLOWANCES

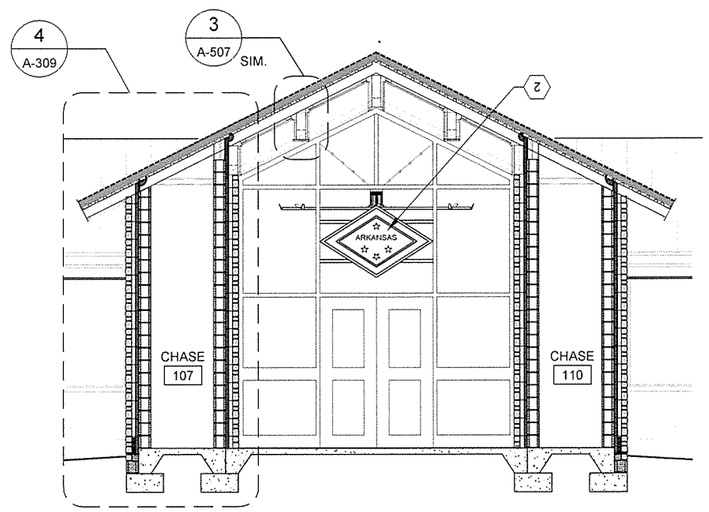


1 A-303 BUILDING SECTION
SCALE: 1/4" = 1'-0"

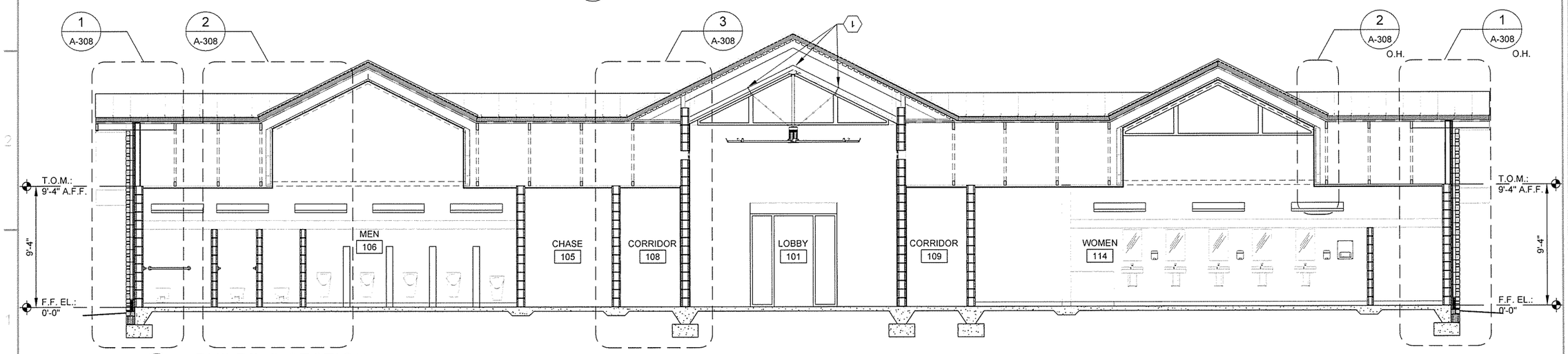


2 A-303 BUILDING SECTION
SCALE: 1/4" = 1'-0"

0 2' 4' 8' 12'
SCALE: 1/4" = 1'-0"


GARVER
4701 Northshore Drive
N Little Rock, AR 72118
501-376-3633
www.GarverUSA.com


REGISTERED ARCHITECT
Garver, LLC
License No. LL111
STATE OF ARKANSAS

REGISTERED ARCHITECT
Greg A. Archer
License No. 2671
STATE OF ARKANSAS

| Symbol | Description | Date | Appr |
|---|---|---|---|
| IFC | ISSUED FOR CONSTRUCTION | 10/1/15 | JRR |

Designed by: J. RAMSEY
Drawn by: J. RAMSEY
Checked by: G. ARCHER
File Name: AH15VR-A-303 DWG
Submitted by: John T. Watkins, III, PE, SE, Director, Federal Services
Plot Date: 10/1/15
Plot Scale: 1:1
Dwg Code: -
Job Number: 060451
N/A
N/A
N/A

ARKANSAS HIGHWAY AND TRANSPORTATION DEPARTMENT
ARKANSAS TOURIST INFORMATION CENTER
(WHITE RIVER) (S)
JOB 061451

TOURIST INFORMATION CENTER
BUILDING SECTIONS

Sheet Reference Number:
A-303

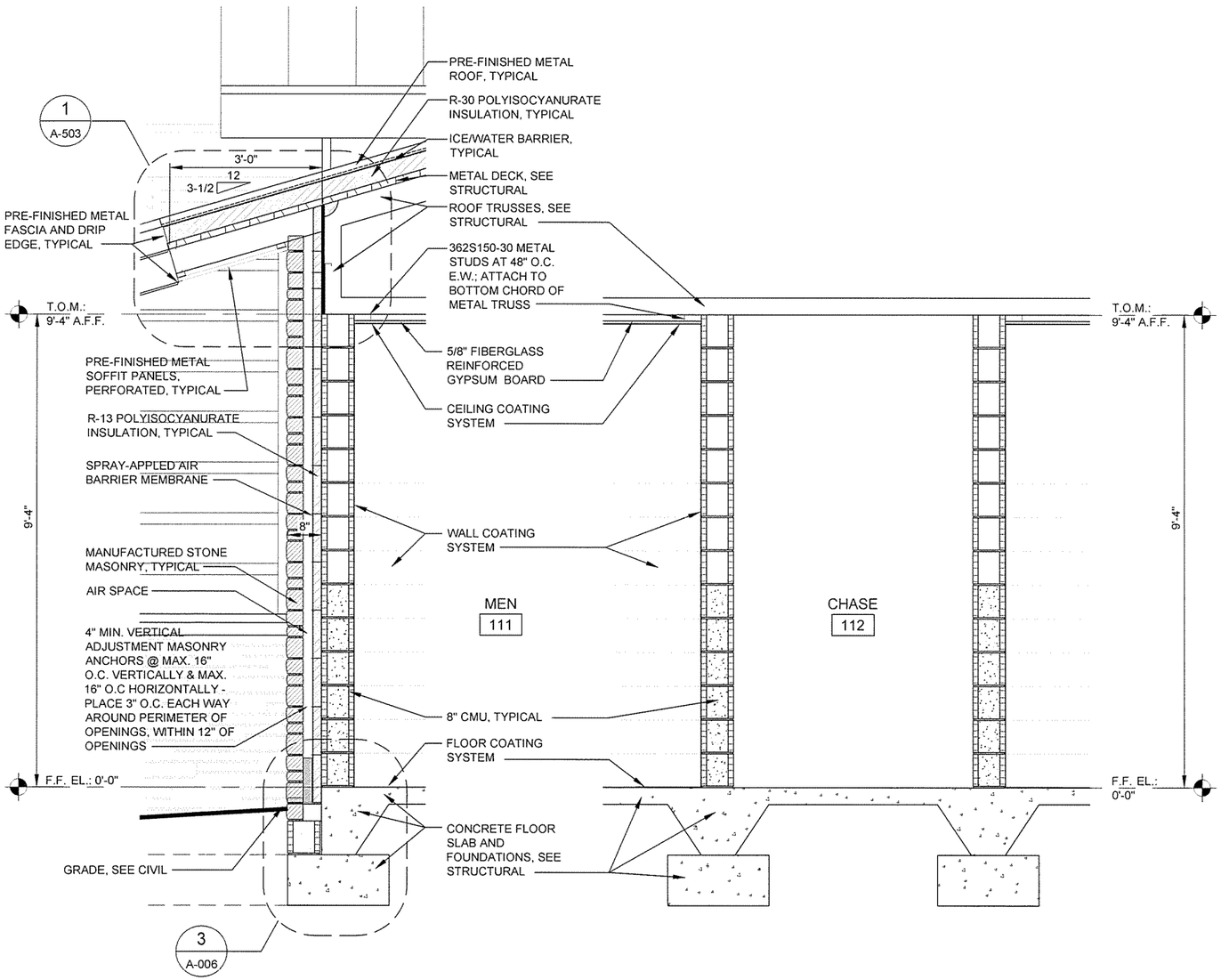


1 A-304 BUILDING SECTION
SCALE: 1/4" = 1'-0"

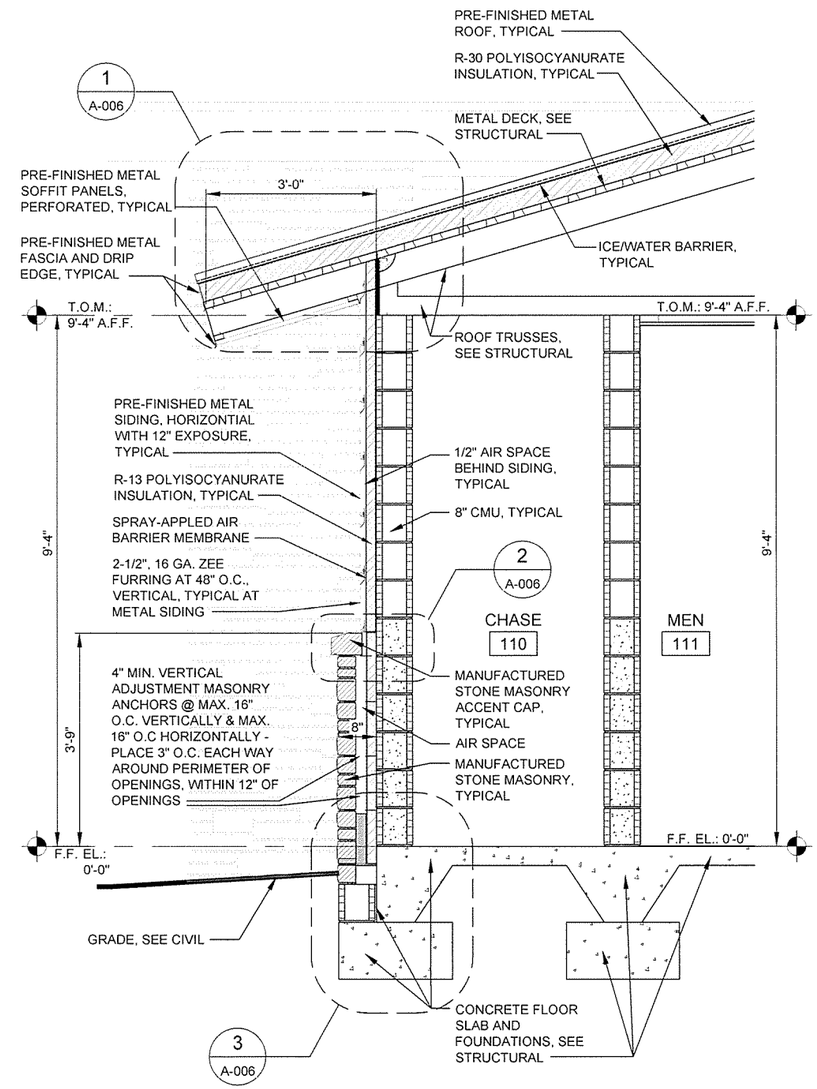


2 A-304 WALL SECTION
SCALE: 3/4" = 1'-0"

3 A-304 WALL SECTION
SCALE: 3/4" = 1'-0"

0 6" 1' 2' 3' 4'
SCALE: 3/4" = 1'-0"


GARVER
4701 Northshore Drive
N Little Rock, AR 72118
501-376-3633
www.GarverUSA.com


REGISTERED ARCHITECT
Garver, LLC
License No. LL111
STATE OF ARKANSAS

REGISTERED ARCHITECT
Greg A. Archer
License No. 2671
STATE OF ARKANSAS
10/1/15

| IFC Symbol | ISSUED FOR CONSTRUCTION Description | 10/1/15 Date | JRR Appr. |
|---|---|---|---|

Job Number 060451
Submitted by John T. Watkins, III, PE, SE Director, Federal Services
Plot Date 10/1/15
Plot Scale 1:1
Designed by J RAMSEY
Drawn by J RAMSEY
Checked by G ARCHER
Dwg Code
File Name AH15WR-A-304.DWG

ARKANSAS HIGHWAY AND TRANSPORTATION DEPARTMENT
ARKANSAS TOURIST INFORMATION CENTER
(WHITE RIVER) (S)
JOB 061451

TOURIST INFORMATION CENTER
WALL SECTIONS

Sheet Reference Number:
A-304

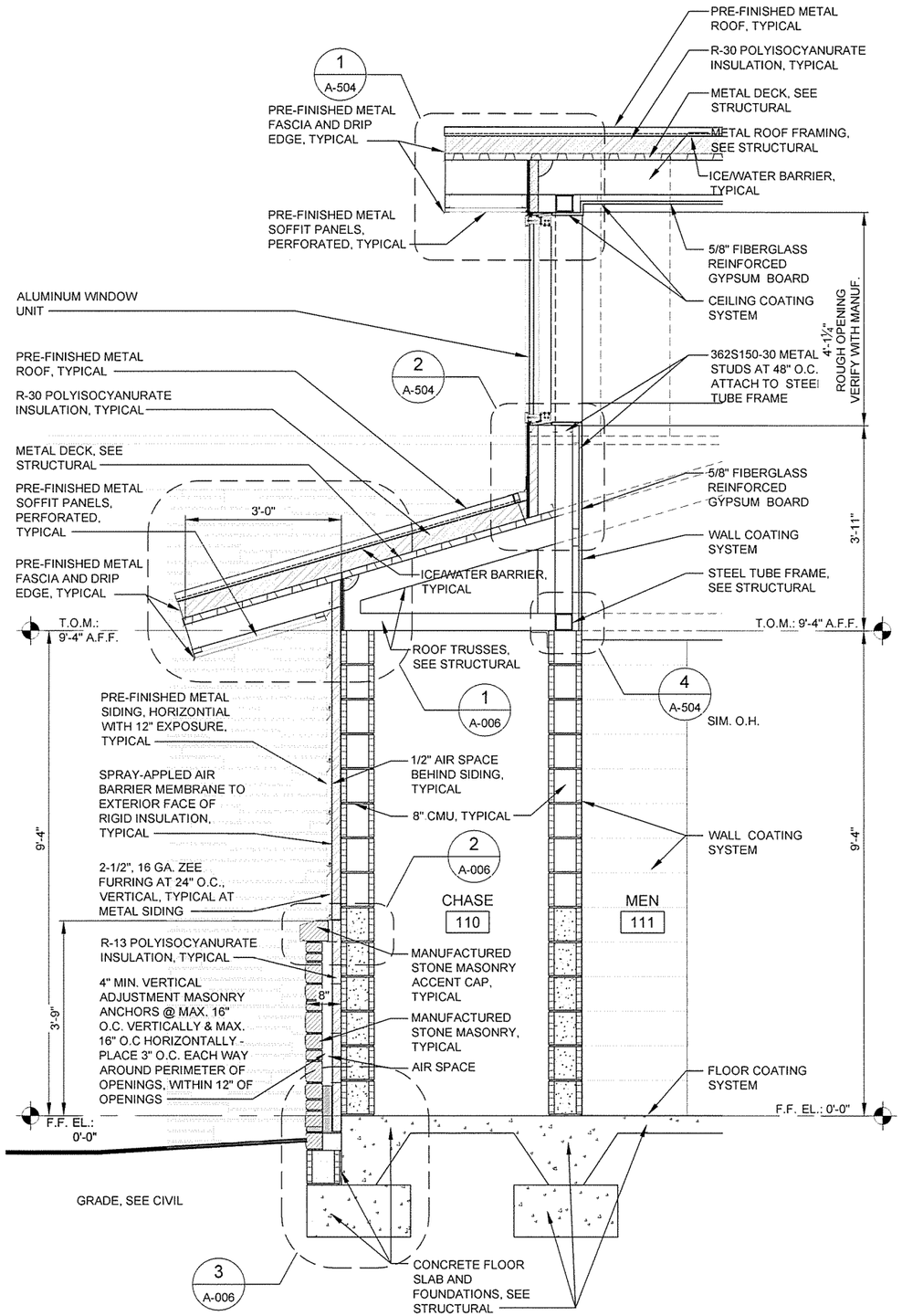


1 A-305 **WALL SECTION**
SCALE: ¾" = 1'-0"

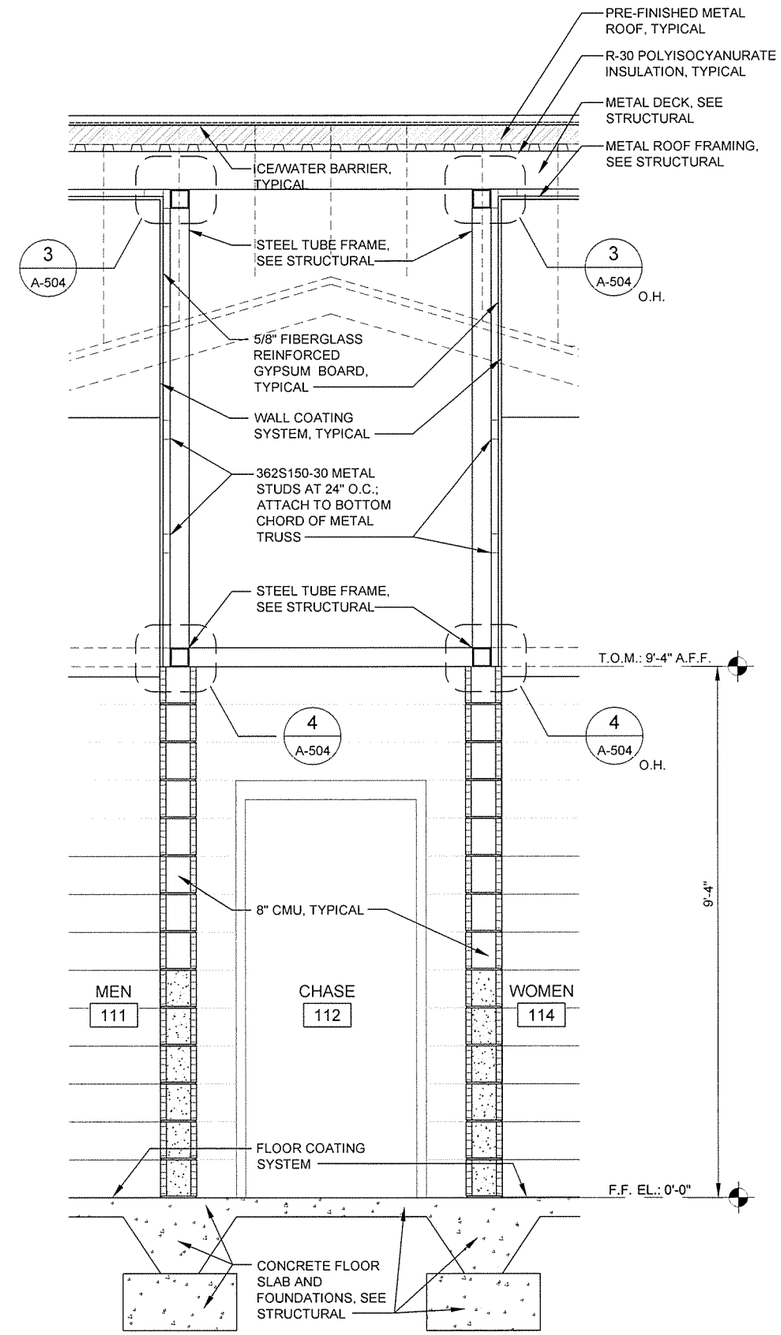


2 A-305 **WALL SECTION**
SCALE: ¾" = 1'-0"

0 6" 2' 1' 4' 2' 8' 3' 12'
SCALE: ¾" = 1'-0"

GARVER
4701 Northshore Drive
N Little Rock, AR 72118
501-376-3633
www.GarverUSA.com

REGISTERED ARCHITECT Garver, LLC License No. LL111 STATE OF ARKANSAS

REGISTERED ARCHITECT Greg A. Archer License No. 2001 STATE OF ARKANSAS

| Symbol | Description | Date | Appr. |
|---|---|---|---|
| IFC | ISSUED FOR CONSTRUCTION | 10/1/15 | JRR |

Designed by: J RAMSEY
Drawn by: J RAMSEY
Checked by: G ARCHER
Submitted by: John T. Watkins, II, P.E., SE, Director, Structural Services
Plot Date: 10/1/15
Plot Scale: 1:1
Doug Code: -
File Name: AH15VR-A-305 DWG
Job Number: 060451
N/A
N/A
N/A

ARKANSAS HIGHWAY AND TRANSPORTATION DEPARTMENT
ARKANSAS TOURIST INFORMATION CENTER
(WHITE RIVER) (S)
JOB 061451

TOURIST INFORMATION CENTER
WALL SECTIONS

Sheet Reference Number:
A-305

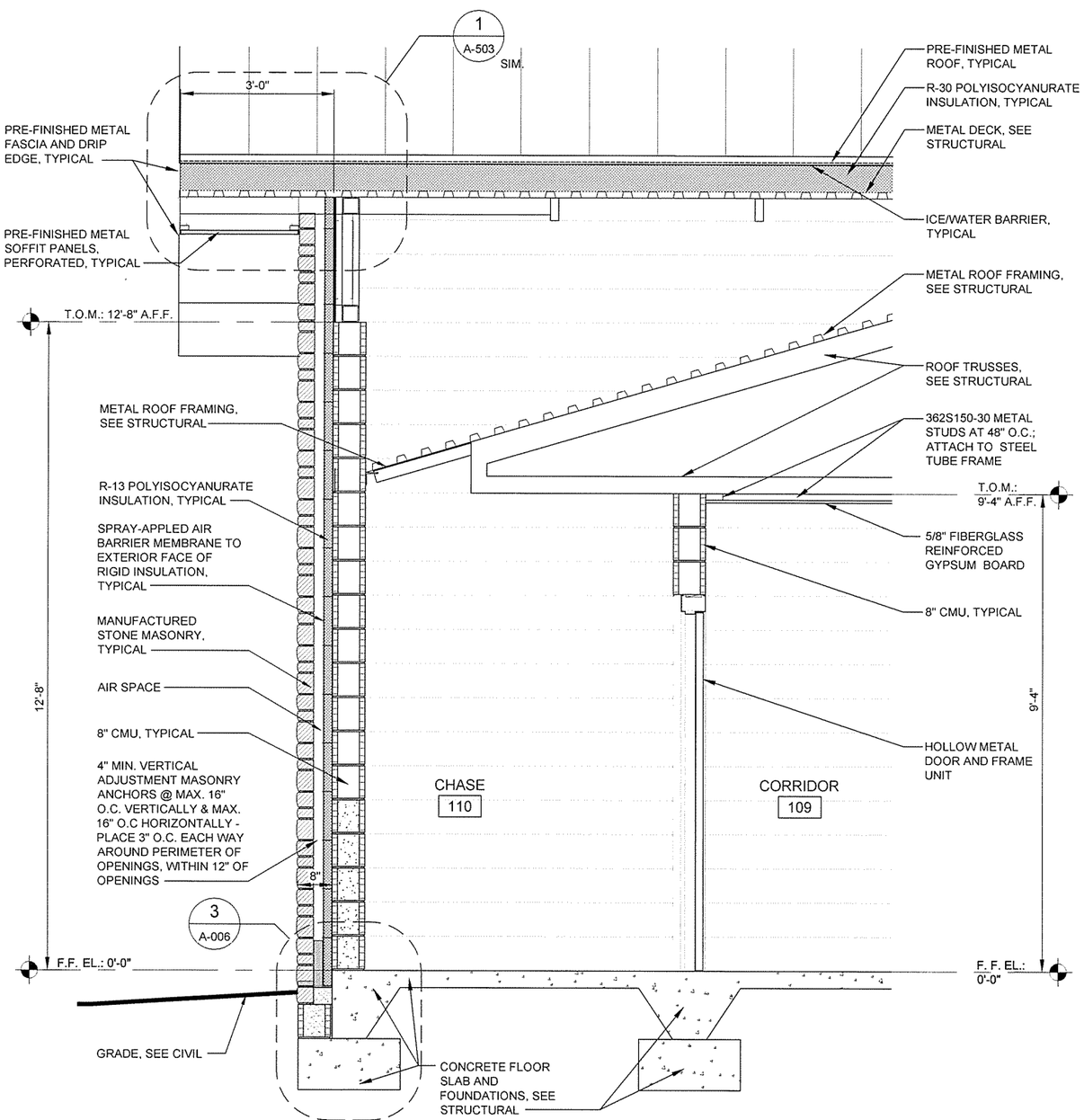


1 / A-306 **WALL SECTION**

SCALE: 3/4" = 1'-0"

0 6" 2' 1' 4' 2' 8' 3' 12'

SCALE: 3/4" = 1'-0"

GARVER
4701 Northshore Drive
N Little Rock, AR 72118
501-376-3633
www.GarverUSA.com

REGISTERED ARCHITECT Garver, LLC License No. LL111 STATE OF ARKANSAS

REGISTERED ARCHITECT Greg A. Archer License No. 2676 STATE OF ARKANSAS

| Symbol | Description | Date | Appr. |
|---|---|---|---|
| IFC | ISSUED FOR CONSTRUCTION | 10/1/15 | JRR |

Designed by: J. RAMSEY
Drawn by: J. RAMSEY
Checked by: G. ARCHER
Submitted by: John T. Watkins, III, P.E., SE, Director, Facilities Services
Plot Date: 10/1/15
Plot Scale: 1:1
Dwg Code: .
File Name: AH15VR-A-306 DWG
Job Number: 061451
N/A
N/A
N/A

ARKANSAS HIGHWAY AND TRANSPORTATION DEPARTMENT
ARKANSAS TOURIST INFORMATION CENTER
(WHITE RIVER) (S)
JOB 061451

TOURIST INFORMATION CENTER
WALL SECTIONS

Sheet Reference Number:
A-306

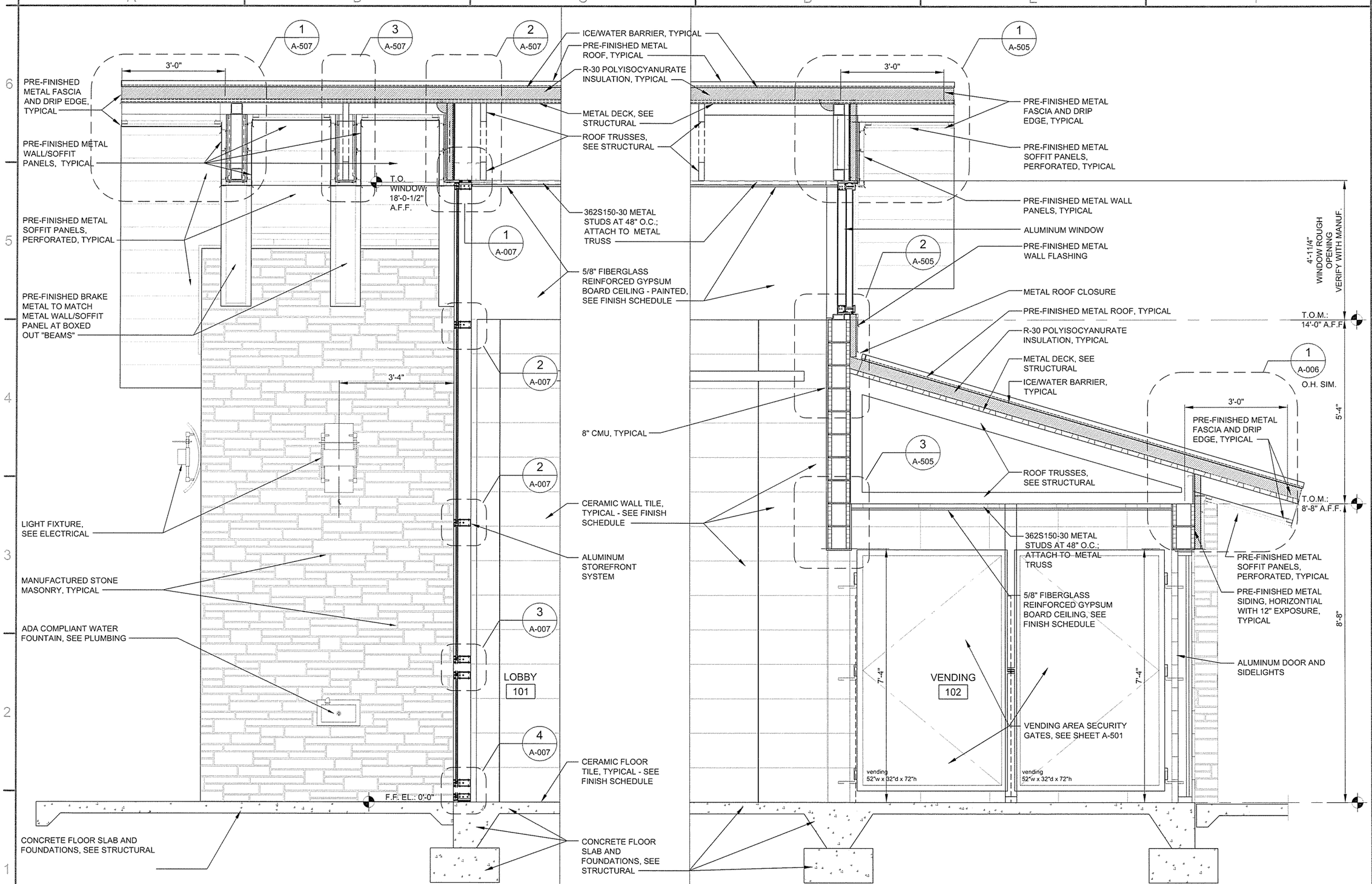


1 A-307 WALL SECTION
SCALE: 3/4" = 1'-0"

2 A-307 WALL SECTION
SCALE: 3/4" = 1'-0"

0 6" 1' 2' 3' 4'
SCALE: 3/4" = 1'-0"

GARVER
4701 Northshore Drive
N Little Rock, AR 72118
501-376-3633
www.GarverUSA.com

REGISTERED ARCHITECT
Garver, LLC
License No. LL111
STATE OF ARKANSAS

REGISTERED ARCHITECT
Greg A. Archer
License No. 2671
10/1/15
STATE OF ARKANSAS

| Symbol | Description | Date | Appr. |
|---|---|---|---|
| IFC | ISSUED FOR CONSTRUCTION | 10/1/15 | JRR |

Designed by: J. RAMSEY
Drawn by: J. RAMSEY
Checked by: G. ARCHER
Submitted by: John T. Watkins, III, PE, SE Director, Federal Services
Plot Date: 10/2/15
Plot Scale: 1:1
Drwg Code: -
File Name: AH15WR-A-307 DWG
Job Number: 060451
N/A
N/A
N/A

ARKANSAS HIGHWAY AND TRANSPORTATION DEPARTMENT
ARKANSAS TOURIST INFORMATION CENTER
(WHITE RIVER) (S)
JOB 061451

TOURIST INFORMATION CENTER
WALL SECTIONS

Sheet Reference Number:
A-307

Sheet 55 of 130

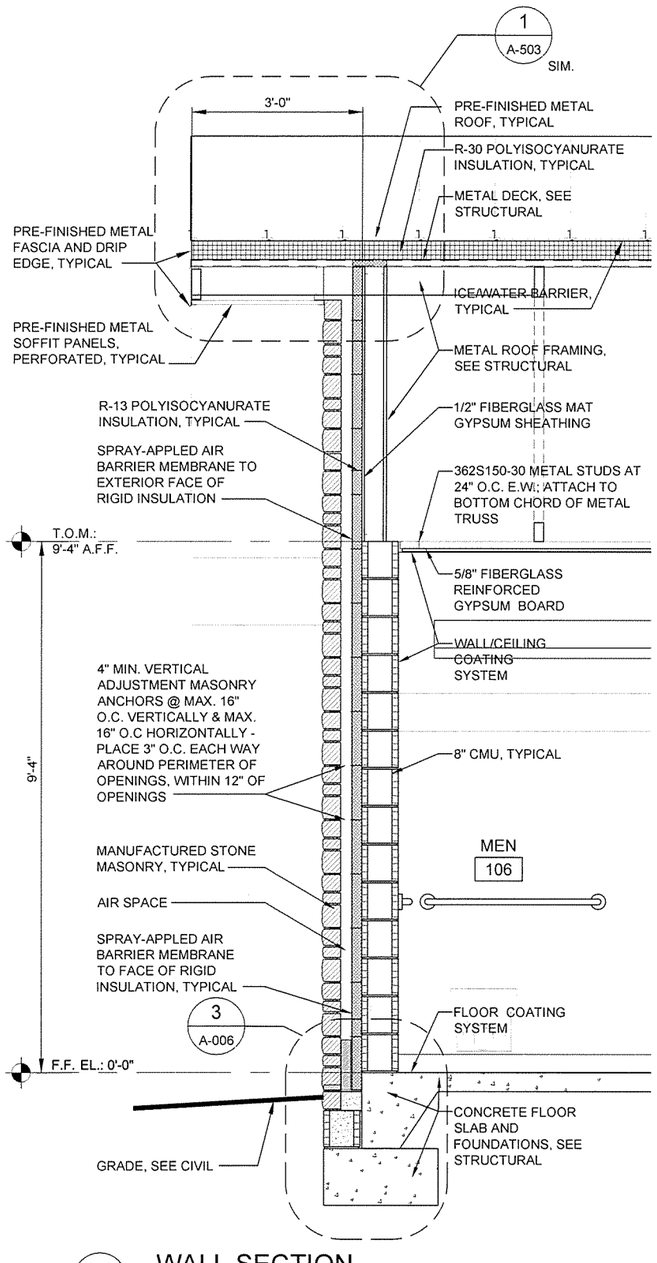


1 A-308 **WALL SECTION**
SCALE: 3/4" = 1'-0"

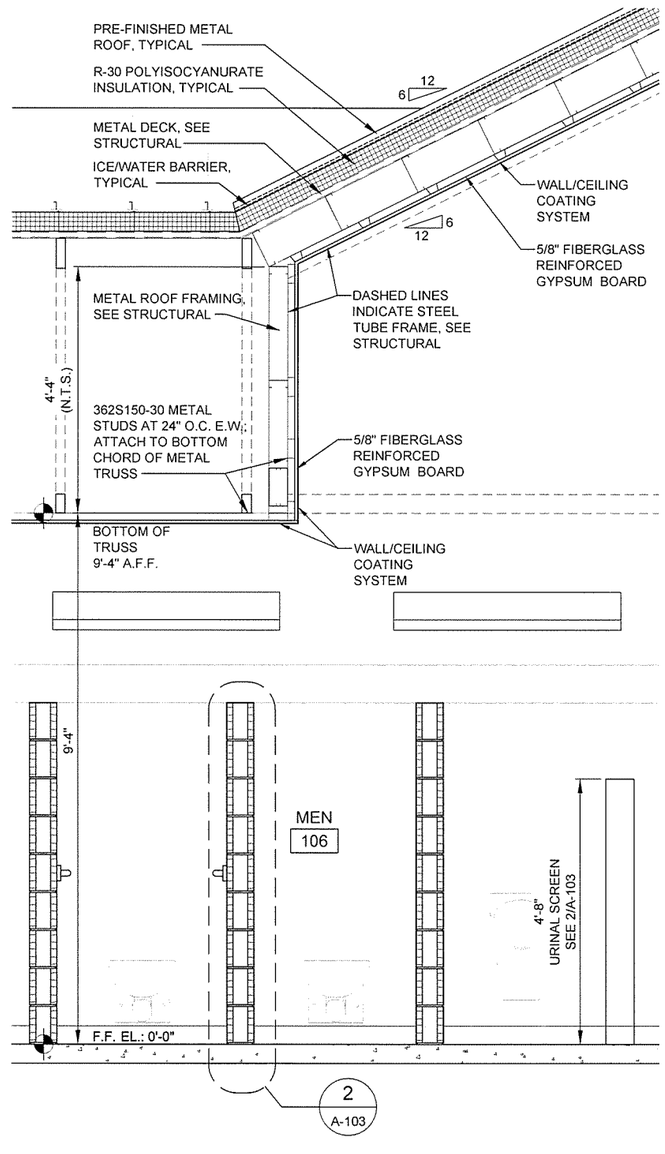


2 A-308 **WALL SECTION**
SCALE: 3/4" = 1'-0"

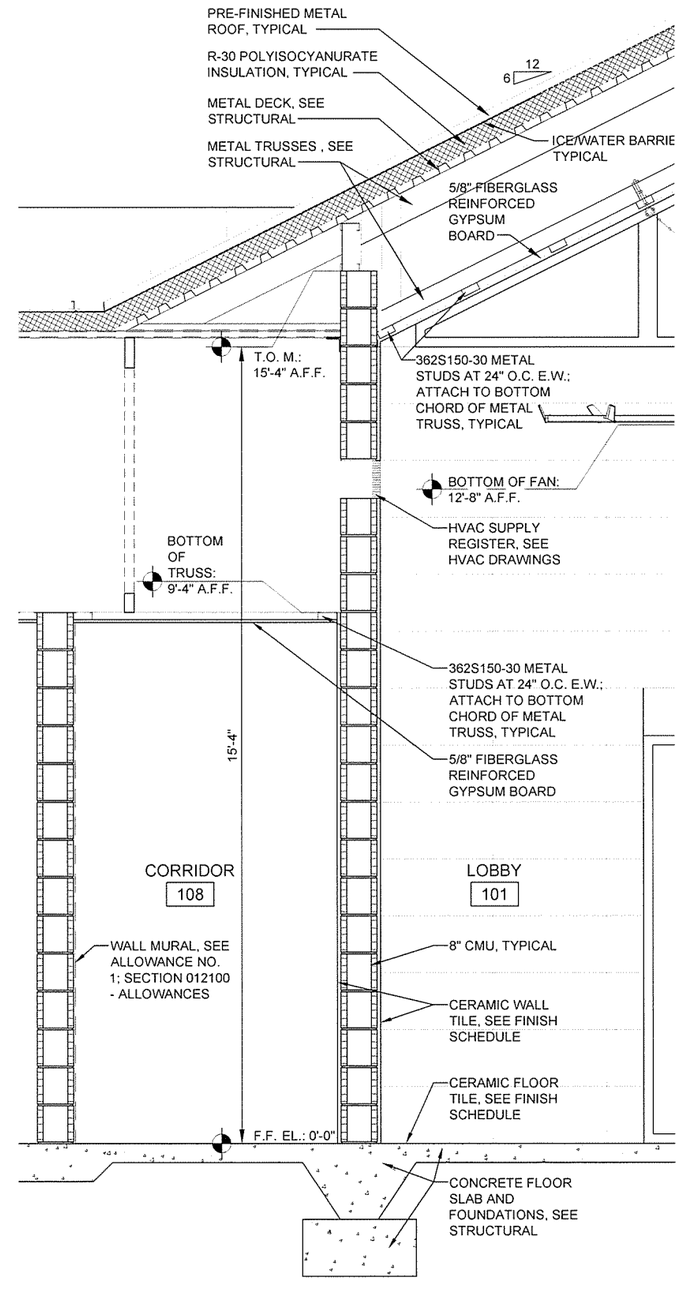


3 A-308 **WALL SECTION**
SCALE: 3/4" = 1'-0"

0 6" 1' 2' 3' 4'
SCALE: 3/4" = 1'-0"


GARVER
4701 Northshore Drive
N Little Rock, AR 72118
501-376-3633
www.GarverUSA.com


REGISTERED ARCHITECT Garver, LLC License No. LL111 STATE OF ARKANSAS

REGISTERED ARCHITECT Greg A. Archer License No. 2678 STATE OF ARKANSAS

| IFC Symbol | ISSUED FOR CONSTRUCTION Description | 10/1/15 Date | JRR Appr. |
|---|---|---|---|

| | | | |
|---|---|---|---|
| Designed by J. RAMSEY | Submitted by John T. Watkins, III, P.E., SE Director, Facilities Services | Job Number 060451 | |
| Drawn by J. RAMSEY | Plot Date 10/1/15 | Plot Scale 1:1 | N/A |
| Checked by G. ARCHER | Dwg Code | N/A | N/A |
| File Name AH15WR-A-308.DWG | | N/A | |

ARKANSAS HIGHWAY AND TRANSPORTATION DEPARTMENT
ARKANSAS TOURIST INFORMATION CENTER (WHITE RIVER) (S)
JOB 061451

TOURIST INFORMATION CENTER
WALL SECTIONS

Sheet Reference Number:
A-308

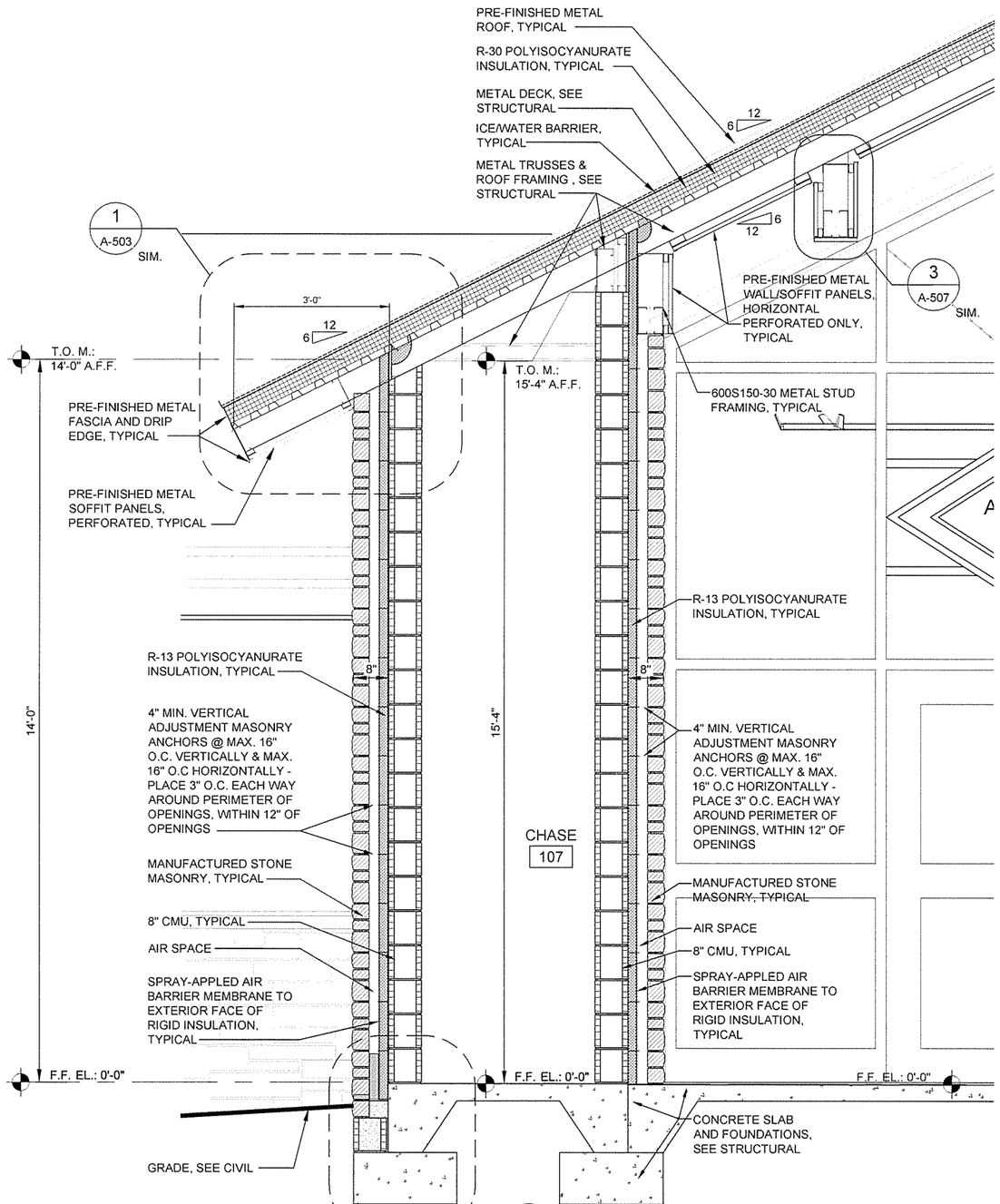


1 A-309 **WALL SECTION**
SCALE: 3/4" = 1'-0"

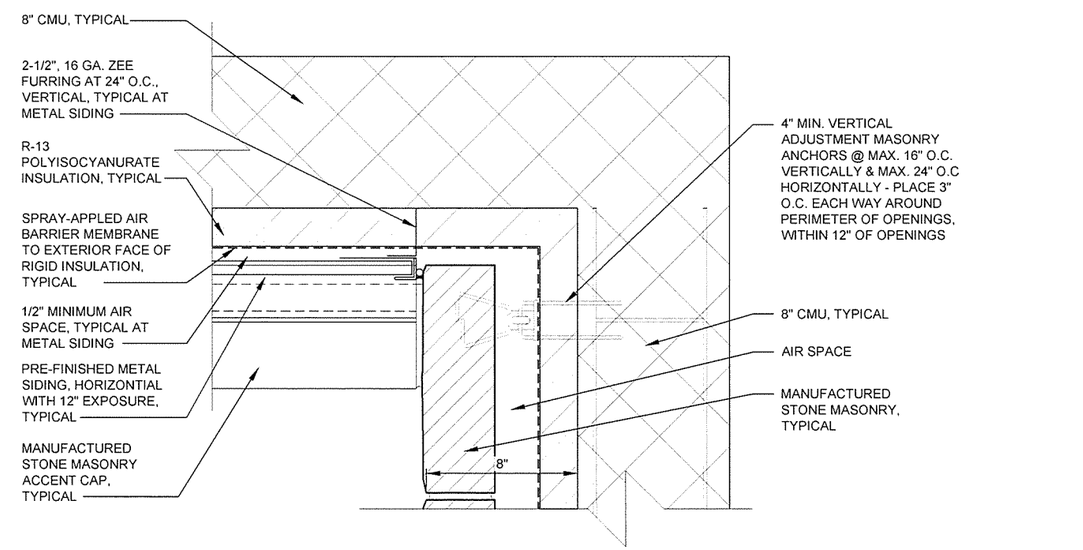


2 A-309 **PLAN DETAIL**
SCALE: 3" = 1'-0"

0 6" 1' 2' 3' 4'
SCALE: 3/4" = 1'-0"

GARVER
4701 Northshore Drive
N Little Rock, AR 72118
501-376-3633
www.GarverUSA.com

REGISTERED ARCHITECT Garver, LLC License No. LL111 STATE OF ARKANSAS

REGISTERED ARCHITECT Greg A. Archer License No. 2671 STATE OF ARKANSAS
10/1/15

| Symbol | Description | Date | Appr. |
|---|---|---|---|
| IFC | ISSUED FOR CONSTRUCTION | 10/1/15 | JRR |

Designed by: J. RAMSEY
Drawn by: J. RAMSEY
Checked by: G. ARCHER
Submitted by: John T. Williams, III PE, SE, Director, Facilities Services
Plot Date: 10/1/15
Plot Scale: 1:1
Dwg Code: .
File Name: AH15VR-A-309.DWG
Job Number: 060451
N/A
N/A
N/A

ARKANSAS HIGHWAY AND TRANSPORTATION DEPARTMENT
ARKANSAS TOURIST INFORMATION CENTER
(WHITE RIVER) (S)
JOB 061451

TOURIST INFROMATION CENTER
WALL SECTIONS

Sheet Reference Number:
A-309

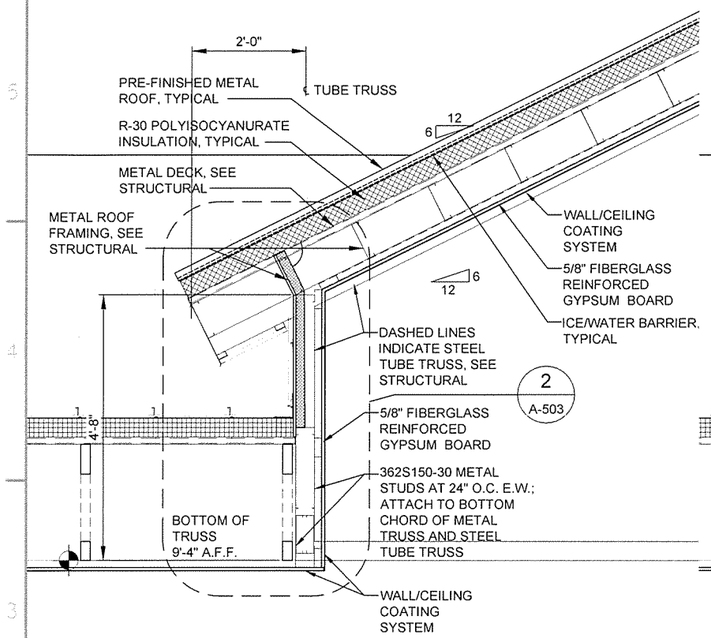


1 A-310 DORMER DETAIL

SCALE: 3/4" = 1'-0"

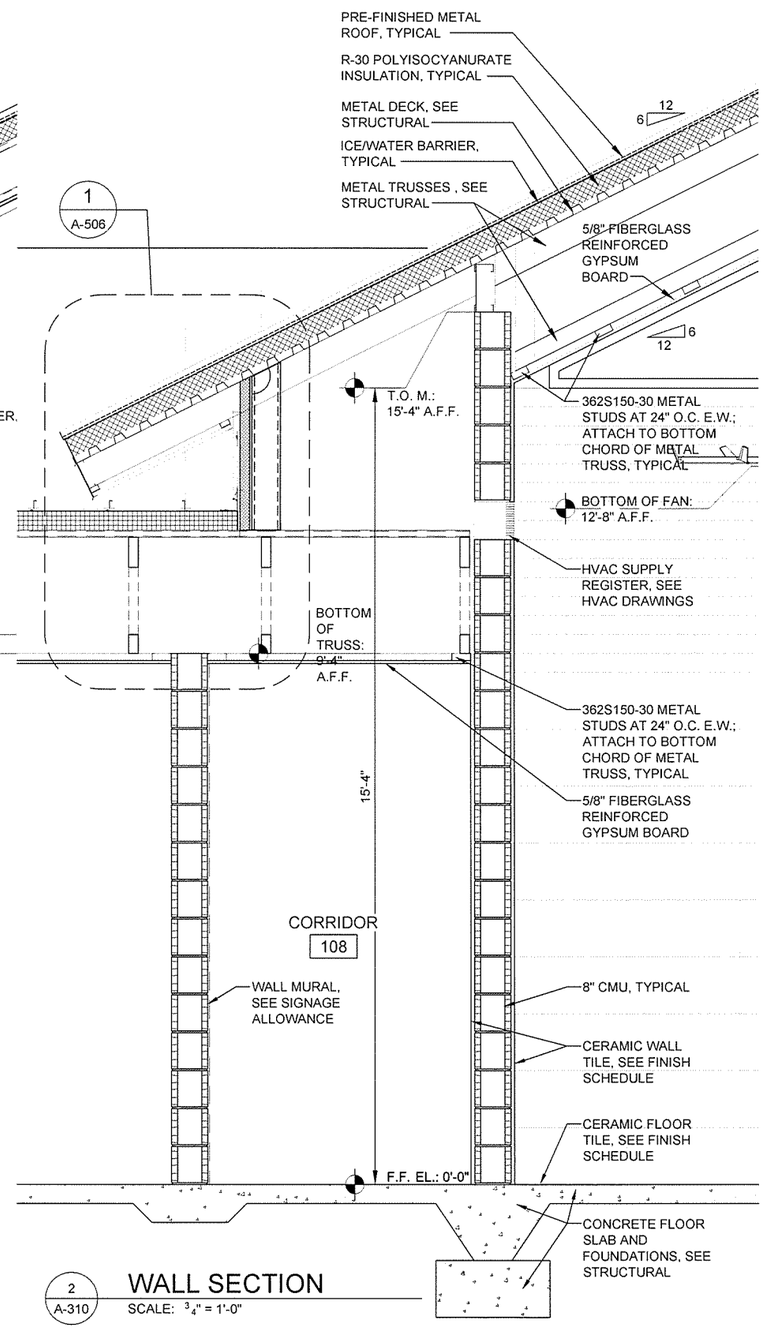


2 A-310 WALL SECTION

SCALE: 3/4" = 1'-0"

0 6" 1' 2' 3' 4'

SCALE: 3/4" = 1'-0"


GARVER
4701 Northshore Drive
N Little Rock, AR 72118
501-376-3633
www.GarverUSA.com


REGISTERED ARCHITECT Garver, LLC License No. LL111 STATE OF ARKANSAS

REGISTERED ARCHITECT Gene A. Archer License No. 2671 STATE OF ARKANSAS 10/1/15

| Symbol | Description | Date | Appr. |
|---|---|---|---|
| IFC | ISSUED FOR CONSTRUCTION | 10/1/15 | JRR |

Designed by: J. RAMSEY
Drawn by: J. RAMSEY
Checked by: G. ARCHER
Submitted by: John T. Vatsinis, III, P.E., SE, Director, Bridge Services
Plot Date: 10/1/15
Plot Scale: 1:1
Dwg Code: -
File Name: AH15VR-A-310.DWG
Job Number: 060451
N/A
N/A
N/A

ARKANSAS HIGHWAY AND TRANSPORTATION DEPARTMENT
ARKANSAS TOURIST INFORMATION CENTER
(WHITE RIVER) (S)
JOB 061451

TOURIST INFORMATION CENTER
WALL SECTIONS

Sheet Reference Number:
A-310

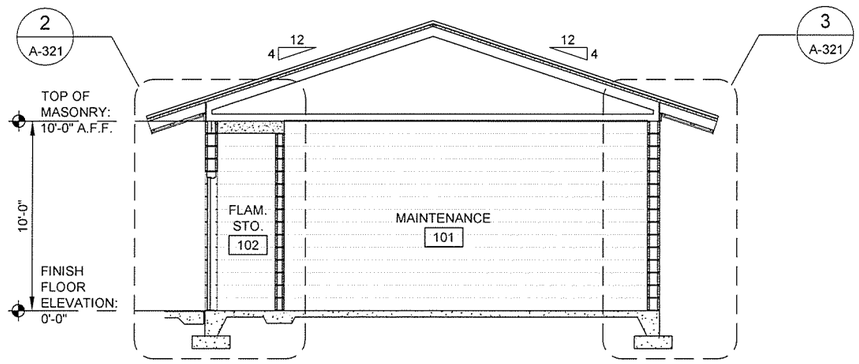


1 A-321 BUILDING SECTION
SCALE: 1/4" = 1'-0"

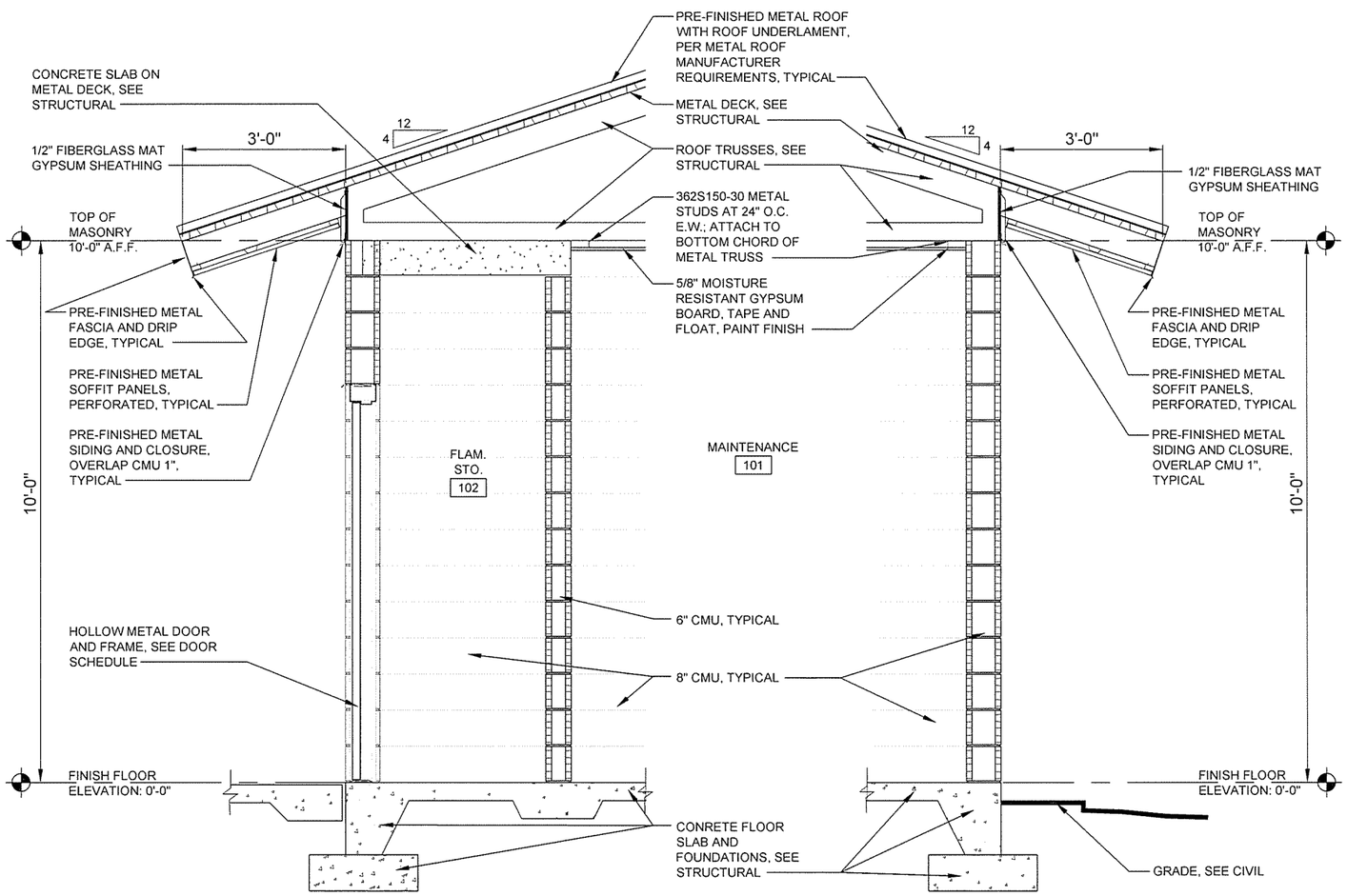


2 A-321 WALL SECTION
SCALE: 3/4" = 1'-0"

3 A-321 WALL SECTION
SCALE: 3/4" = 1'-0"

0 2' 4' 8' 12'
SCALE: 1/4" = 1'-0"

0 6" 1' 2' 3' 4'
SCALE: 3/4" = 1'-0"

GARVER
4701 Northshore Drive
N Little Rock, AR 72118
501-376-3633
www.GarverUSA.com

REGISTERED ARCHITECT
Garver, LLC
License No. LL111
STATE OF ARKANSAS

REGISTERED ARCHITECT
Greg A. Archer
License No. 2671
STATE OF ARKANSAS

| Symbol | Description | Date | Appr |
|---|---|---|---|
| IFC | ISSUED FOR CONSTRUCTION | 10/1/15 | JRR |

Job Number 060451
Submitted by John T. Watkins, III, PE, SE Director, Federal Services
N/A
Plot Date 10/1/15
Plot Scale 1:1
N/A
Dwg Code
N/A
Designed by J RAMSEY
Drawn by J RAMSEY
Checked by G. ARCHER
File Name AH15WR-A-321 DWG

ARKANSAS HIGHWAY AND TRANSPORTATION DEPARTMENT
ARKANSAS TOURIST INFORMATION CENTER
(WHITE RIVER) (S)
JOB 061451

MAINTENANCE BUILDING
BUILDING SECTION

Sheet Reference Number:
A-321

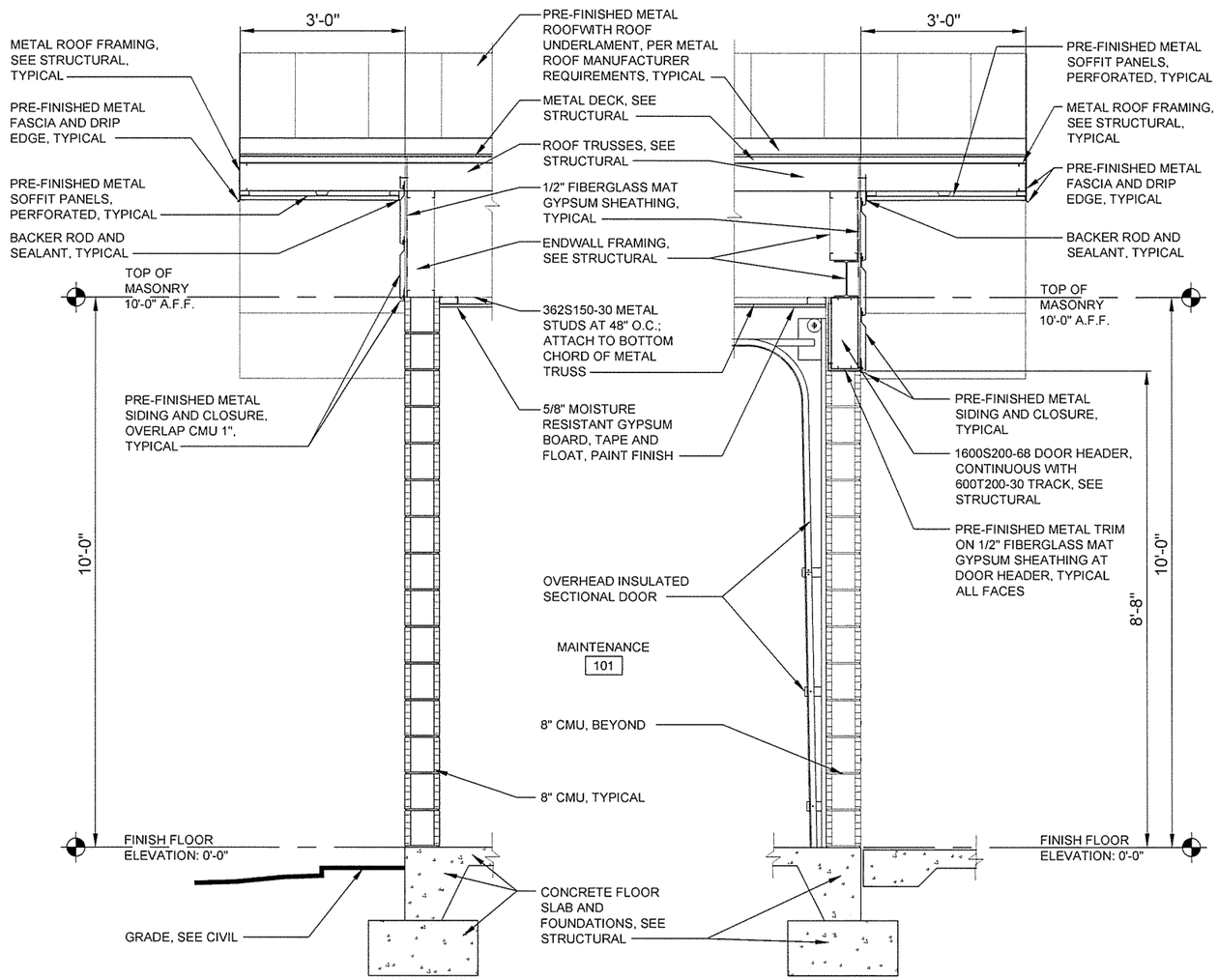


1 / A-322 WALL SECTION
SCALE: 3/4" = 1'-0"

2 / A-322 WALL SECTION
SCALE: 3/4" = 1'-0"

0 6" 1' 2' 3' 4'
SCALE: 3/4" = 1'-0"


GARVER
4701 Northshore Drive
N Little Rock, AR 72118
501-376-3633
www.GarverUSA.com


REGISTERED ARCHITECT
Garver, LLC
License No. LL111
STATE OF ARKANSAS

REGISTERED ARCHITECT
Greg A. Archer
License No. 2671
Oct. 10/15
STATE OF ARKANSAS

| IPC Symbol | ISSUED FOR CONSTRUCTION Description | 10/1/15 Date | JRR Appr. |
|---|---|---|---|

| | | | |
|---|---|---|---|
| Designed by J. RAMSEY | Submitted by John T. Watkins, III, P.E., SE Director, Federal Services | Job Number 060451 | |
| Drawn by J. RAMSEY | Plot Date 10/1/15 | Plot Scale 1:1 | N/A - |
| Checked by G. ARCHER | Dwg Code - | N/A - | N/A - |
| File Name AH15WR-A-322.DWG | | | |

ARKANSAS HIGHWAY AND TRANSPORTATION DEPARTMENT
ARKANSAS TOURIST INFORMATION CENTER
(WHITE RIVER) (S)
JOB 061451

MAINTENANCE BUILDING
WALL SECTIONS

Sheet Reference Number:
A-322

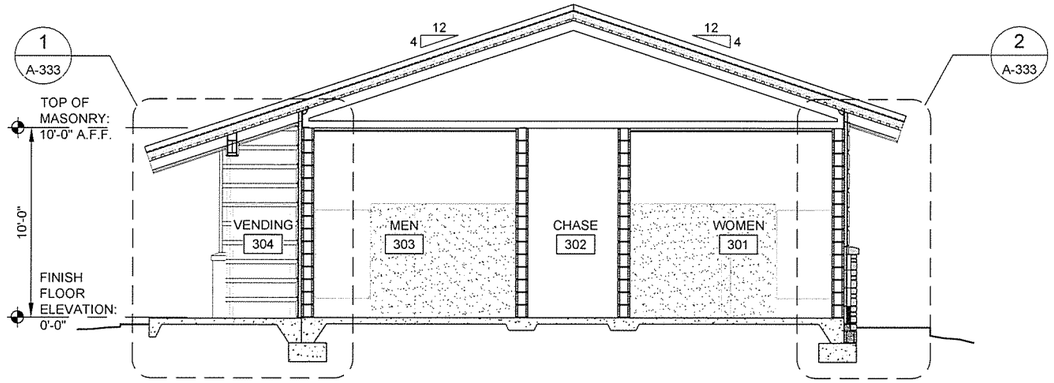


1 A-331 **BUILDING SECTION**
SCALE: 1/4" = 1'-0"

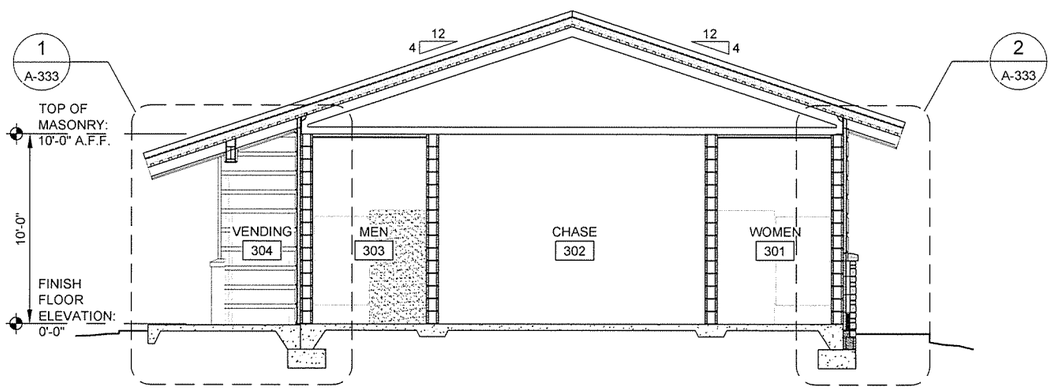


2 A-331 **BUILDING SECTION**
SCALE: 1/4" = 1'-0"

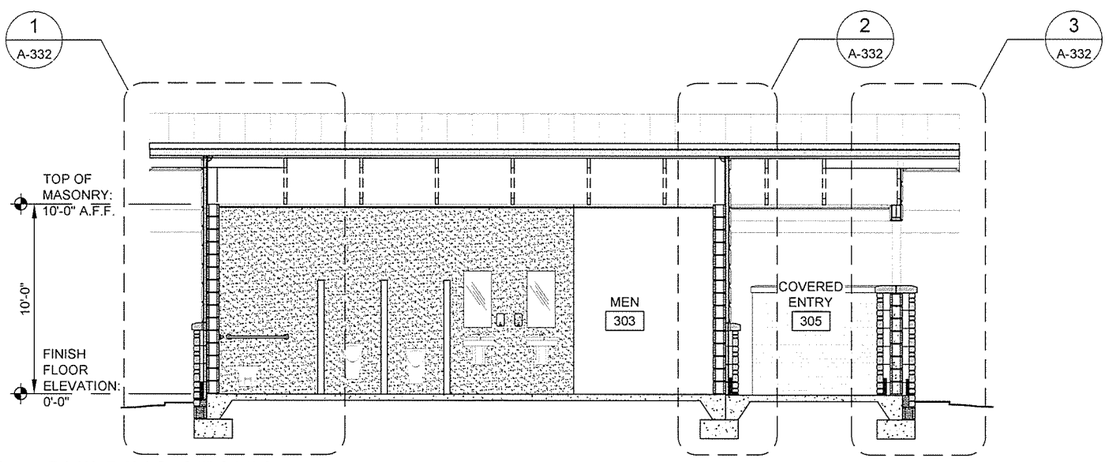


3 A-331 **BUILDING SECTION**
SCALE: 1/4" = 1'-0"

0 2' 4' 8' 12'
SCALE: 1/4" = 1'-0"


GARVER
4701 Northshore Drive
N Little Rock, AR 72118
501-376-3633
www.GarverUSA.com


REGISTERED ARCHITECT
Garver, LLC
License No. LL111
STATE OF ARKANSAS

REGISTERED ARCHITECT
Greg A. Archer
License No. 2671
10/1/15
STATE OF ARKANSAS

| Symbol | Description | Date | Appr. |
|---|---|---|---|
| IFC | ISSUED FOR CONSTRUCTION | 10/1/15 | JRR |

Job Number: 060451
Submitted by: John T. Watkins, III, PE, SE, Director, Federal Services
Plot Scale: 1:1
Plot Date: 10/1/15
Drwg Code: -
Designed by: J RAMSEY
Drawn by: J RAMSEY
Checked by: G ARCHER
File Name: AH15WR-A-331 DWG

ARKANSAS HIGHWAY AND TRANSPORTATION DEPARTMENT
ARKANSAS TOURIST INFORMATION CENTER
(WHITE RIVER) (S)
JOB 061451

TRUCKER-VENDING BUILDING
BUILDING SECTIONS

Sheet Reference Number:
A-331

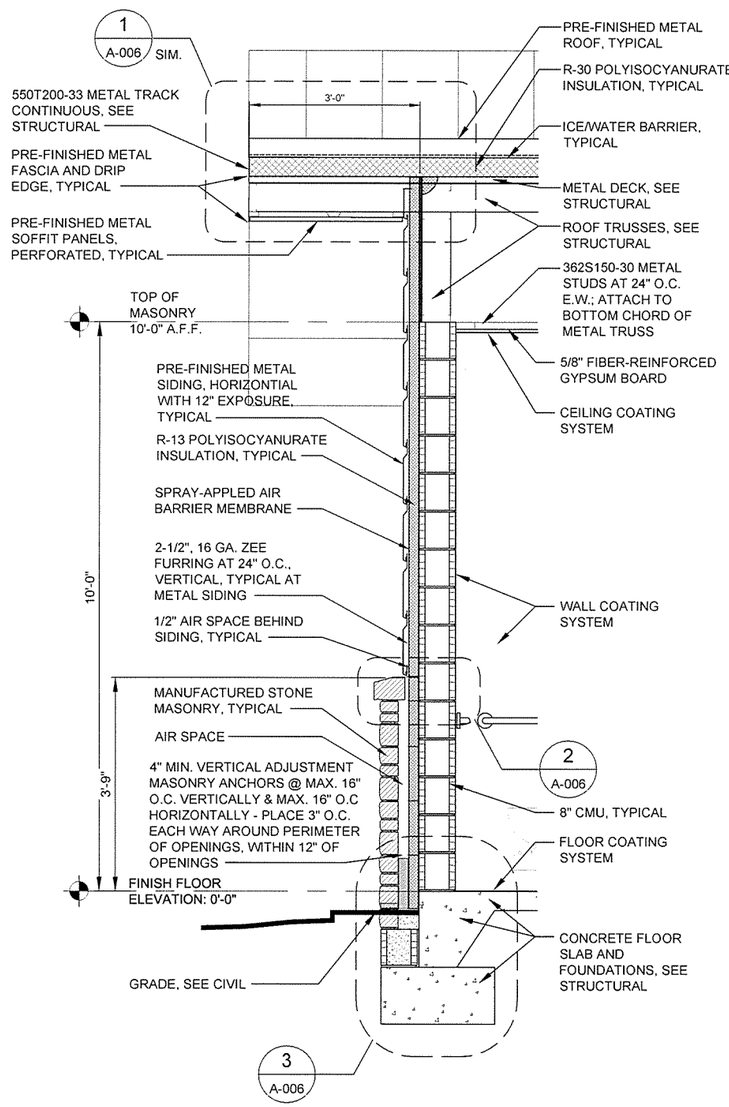


1 A-332 WALL SECTION
SCALE: 3/4" = 1'-0"

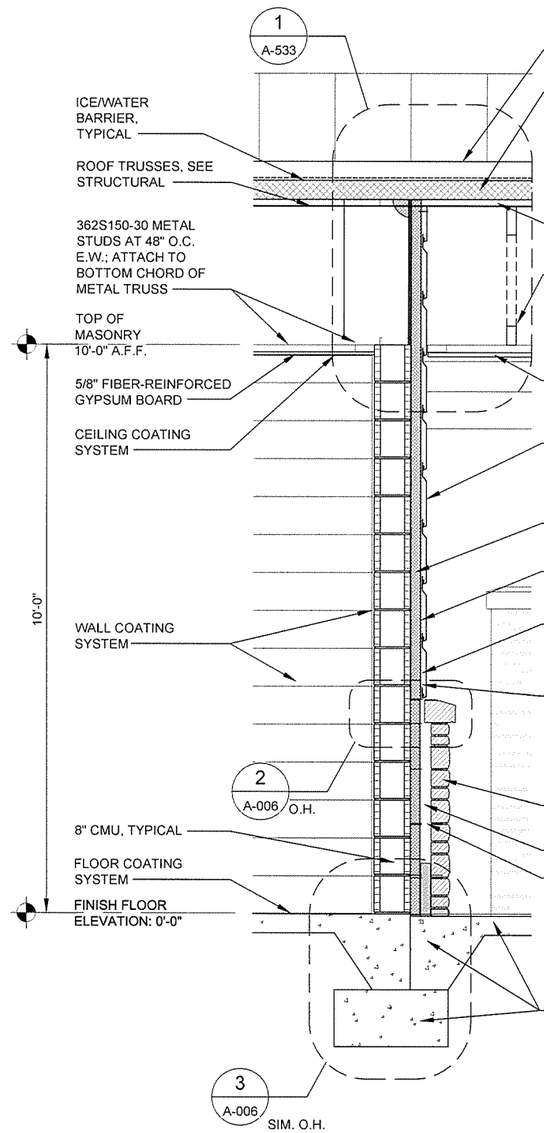


2 A-332 WALL SECTION
SCALE: 3/4" = 1'-0"

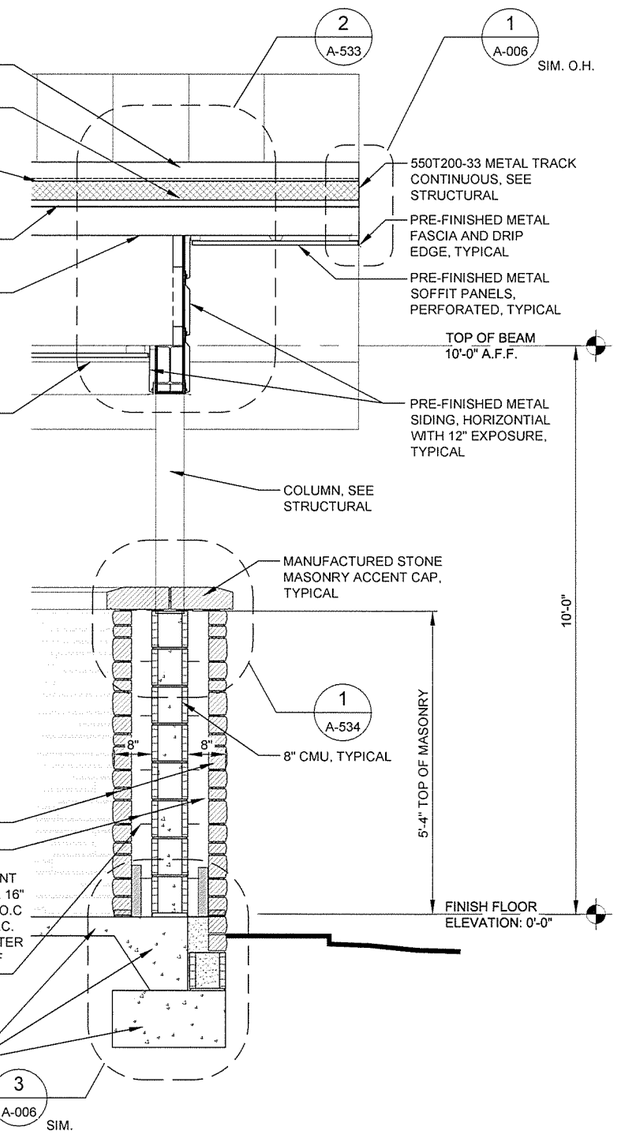


3 A-332 WALL SECTION
SCALE: 3/4" = 1'-0"

0 6" 1' 2' 3' 4'
SCALE: 3/4" = 1'-0"


GARVER
4701 Northshore Drive
N Little Rock, AR 72118
501-376-3633
www.GarverUSA.com


REGISTERED ARCHITECT
Garver, LLC
License No. LL111
STATE OF ARKANSAS

REGISTERED ARCHITECT
Greg Archer
License No. 2071
10/1/15
STATE OF ARKANSAS

| Symbol | Description | Date | Appr |
|---|---|---|---|
| IFC | ISSUED FOR CONSTRUCTION | 10/1/15 | JRR |

Job Number 060451

Submitted by: John T. Vasicek, III, PE, SE, Director, Civil/Structural Services

Designed by: J. RAMSEY
Drawn by: J. RAMSEY
Plot Date: 10/1/15
Plot Scale: 1:1
Checked by: G. ARCHER
Dwg Code: -
File Name: AH15WR-A-332.DWG

ARKANSAS HIGHWAY AND TRANSPORTATION DEPARTMENT
ARKANSAS TOURIST INFORMATION CENTER
(WHITE RIVER) (S)
JOB 061451

TRUCKER-VENDING BUILDING
WALL SECTIONS

Sheet Reference Number:
A-332

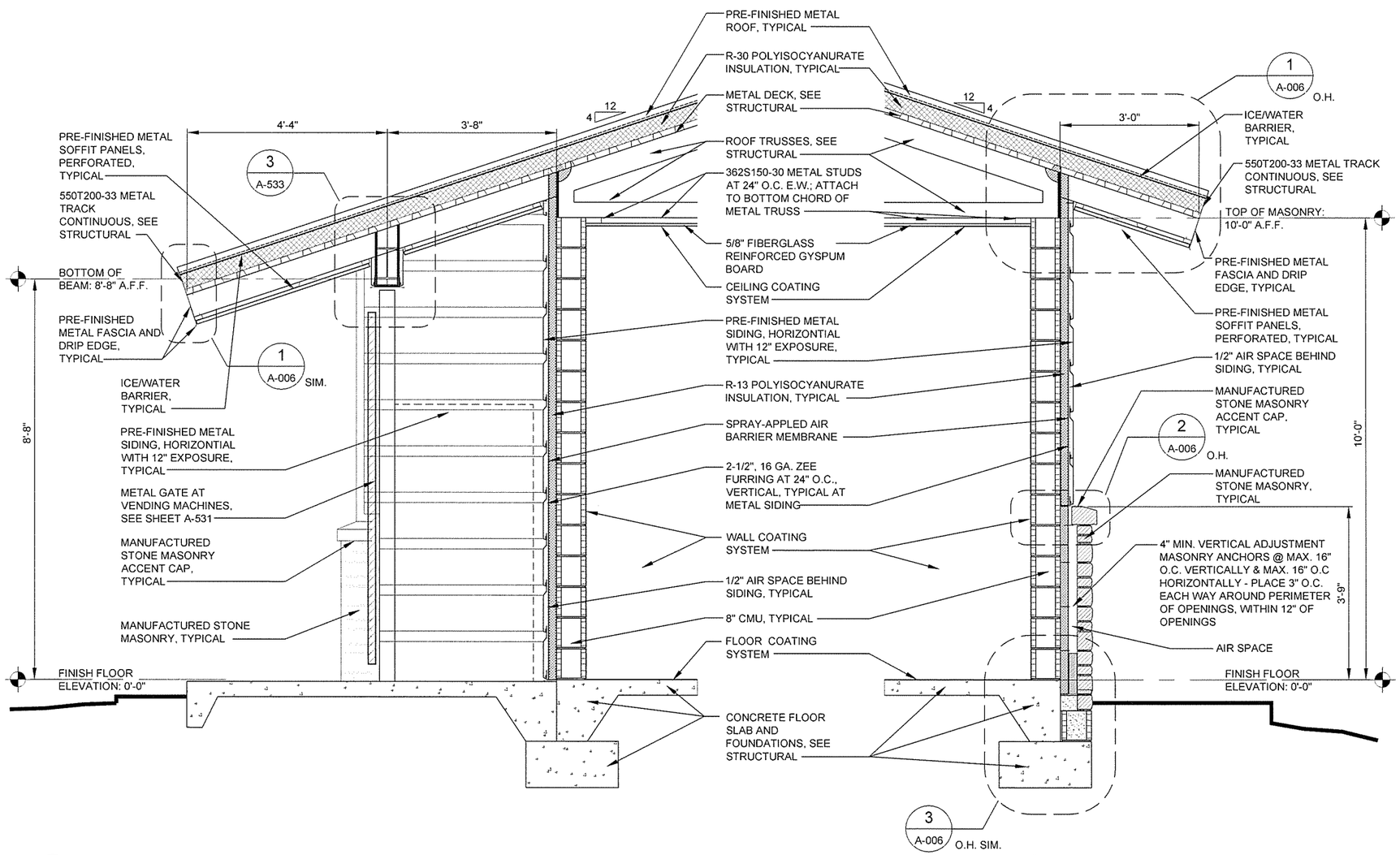


1 A-333 WALL SECTION
SCALE: 3/4" = 1'-0"

2 A-333 WALL SECTION
SCALE: 3/4" = 1'-0"

0 6" 1' 2' 3' 4'
SCALE: 3/4" = 1'-0"


GARVER
4701 Northshore Drive
N Little Rock, AR 72118
501-376-3633
www.GarverUSA.com


REGISTERED ARCHITECT
Garver, LLC
License No. LL111
STATE OF ARKANSAS

REGISTERED ARCHITECT
Greg A. Archer
License No. 2671
10/1/15
STATE OF ARKANSAS

| Symbol | Description | Date | Appr. |
|---|---|---|---|
| IFC | ISSUED FOR CONSTRUCTION | 10/1/15 | JRR |

Job Number 060451
Submitted by John T. Watkins, III, PE, SE Director, Federal Services
Designed by J. RAMSEY
Drawn by J. RAMSEY
Plot Date: 10/1/15
Plot Scale: 1:1
Checked by G. ARCHER
Dwg Code: -
File Name: AH15WR-A-333.DWG

ARKANSAS HIGHWAY AND TRANSPORTATION DEPARTMENT
ARKANSAS TOURIST INFORMATION CENTER
(WHITE RIVER) (S)
JOB 061451

TRUCKER-VENDING BUILDING
WALL SECTIONS

Sheet Reference Number:
A-333

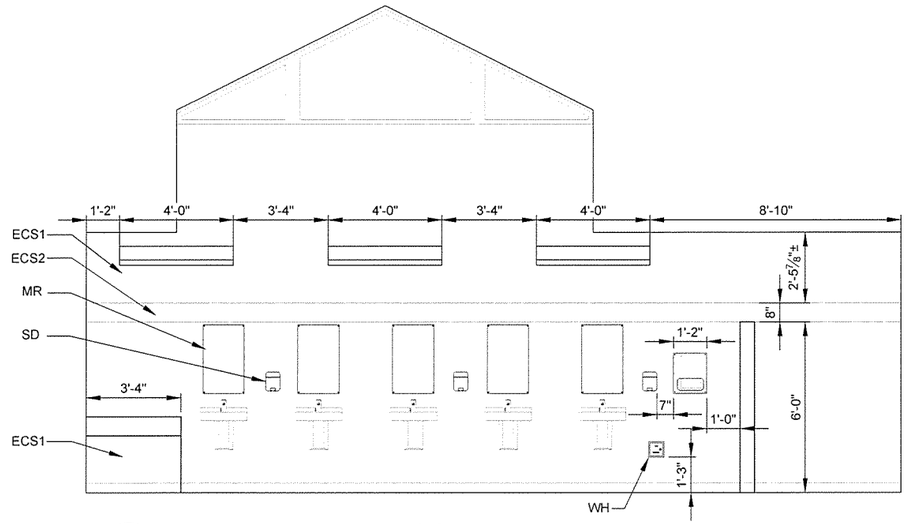


1 A-401 WOMEN'S RESTROOM 114

SCALE: 3/8" = 1'-0"

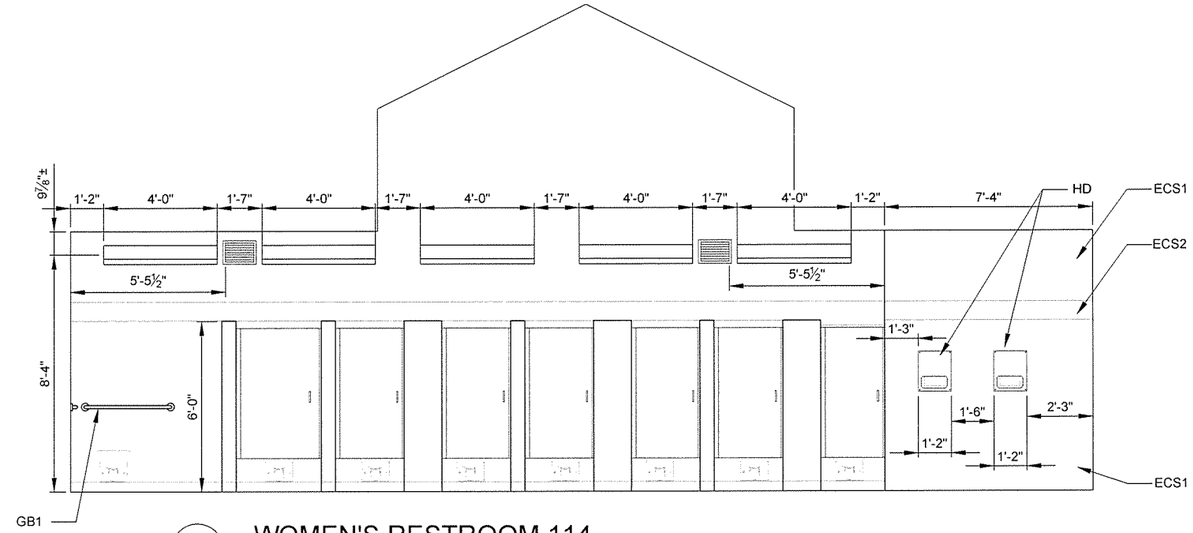


3 A-401 WOMEN'S RESTROOM 114

SCALE: 3/8" = 1'-0"

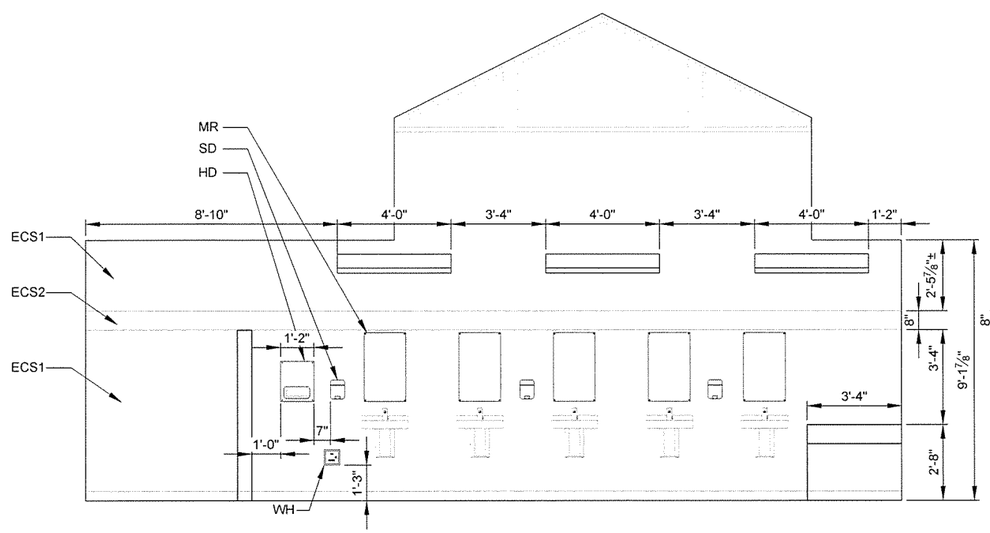


2 A-401 MEN'S RESTROOM 111

SCALE: 3/8" = 1'-0"

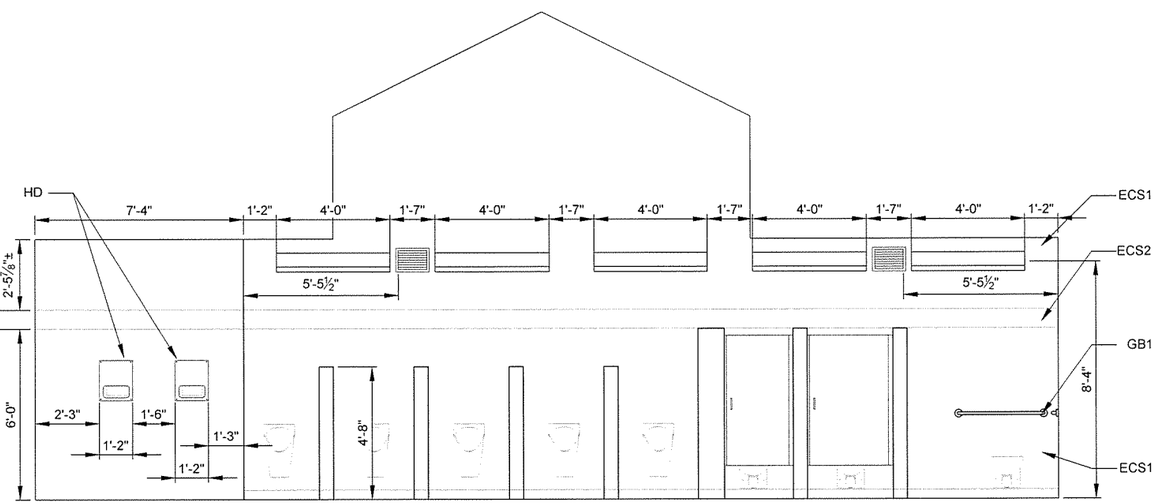


4 A-401 MEN'S RESTROOM 111

SCALE: 3/8" = 1'-0"

## MOUNTING HEIGHTS

MR
BOBRICK B-1556
1830 FRAMELESS
MIRROR

HD
ASI - 0133 ROVAL-
FULLY RECESSED
AUTOMATIC HAND
DRYER

TP
BOBRICK JUMBO
ROLL DISPENSER
#B-2890

SD
BOBRICK
WALL MOUNT
DISPENSER
#B-5050

GB1
BOBRICK 36"
HORIZONTAL
GRAB BAR
#B-5806X36

GB2
BOBRICK 42"
HORIZONTAL
GRAB BAR
#B-5806X42

MH
BOBRICK
SURFACE MOUNTED, S.S.
SHELF WITH (3) MOP/BROOM
HOLDERS, RAG HOOKS AND
DRYING ROD #B-224

WH
WALL HYDRANT,
SEE PLUMBING

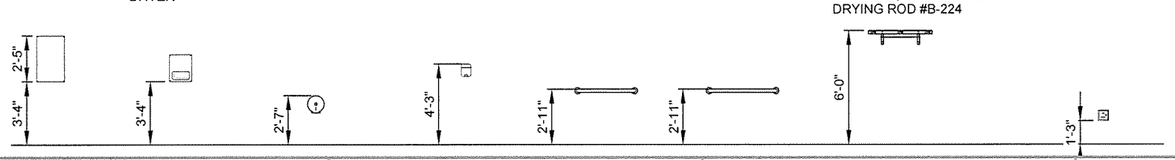


## GENERAL NOTES

1. SEE SHEET A-103 FOR ADDITIONAL DIMENSIONS
2. ECS1, ECS2 & ECS3; SEE ALLOWANCE NO. 3; SECTION 012100 - ALLOWANCES
3. SEE SHEET A-103 FOR CMU TOILET PARTITION AND PARTITION DOOR DETAILS
4. CENTER MIRRORS OVER LAVATORIES, TYPICAL
5. CENTER SOAP DISPENSERS BETWEEN MIRRORS

## LEGEND

0 1' 2' 5' 8'

SCALE: 3/8" = 1'-0"


GARVER
4701 Northshore Drive
N Little Rock, AR 72118
501-376-3633
www.GarverUSA.com


REGISTERED ARCHITECT
Garver, LLC
License No. LL111
STATE OF ARKANSAS

REGISTERED ARCHITECT
Greg A. Archer
License No. 2671
10/1/15
STATE OF ARKANSAS

| Symbol | Description | Date | Appr. |
|---|---|---|---|
| IFC | ISSUED FOR CONSTRUCTION | 10/1/15 | JRR |

Designed by J. RAMSEY
Drawn by P. MASON
Checked by G. ARCHER
Submitted by John T. Watkins, III, PE, SE Director, Federal Services
Plot Date 10/1/15
Plot Scale 1:1
Dwg Code .
File Name AH15VR-A-401 DWG
Job Number 060451
N/A .
N/A .
N/A .

ARKANSAS HIGHWAY AND TRANSPORTATION DEPARTMENT
ARKANSAS TOURIST INFORMATION CENTER
(WHITE RIVER) (S)
JOB 061451

TOURIST INFORMATION CENTER
INTERIOR ELEVATIONS

Sheet Reference Number:
A-401

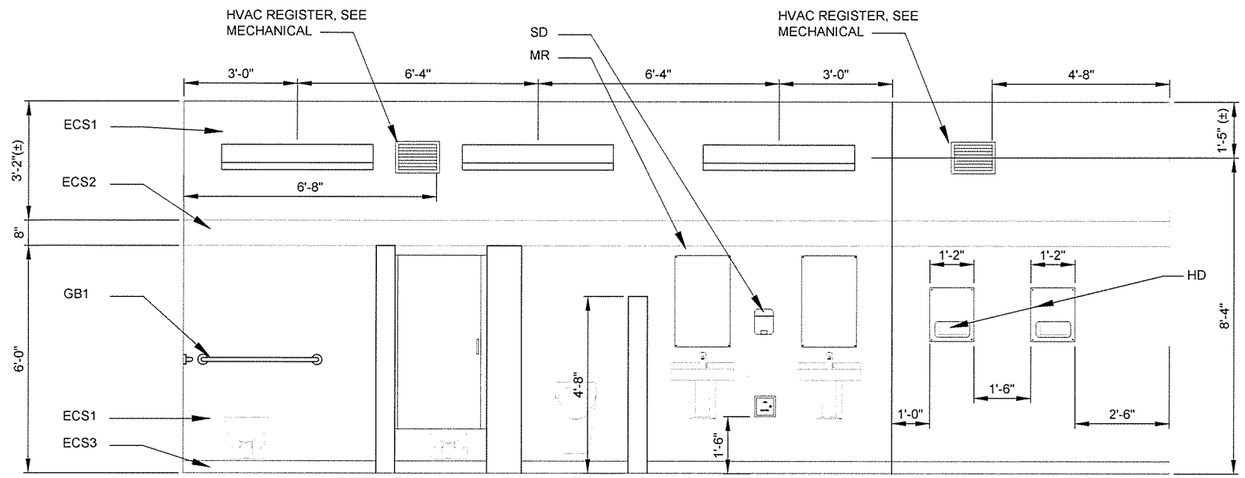


1 / A-431 INTERIOR ELEVATION - MEN

SCALE: ½" = 1'-0"

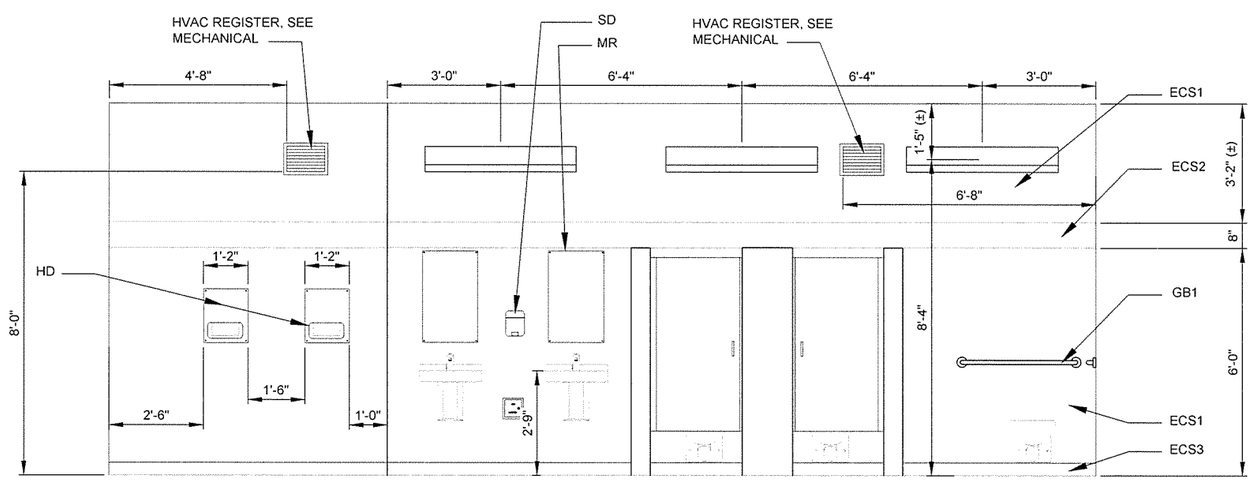


2 / A-431 INTERIOR ELEVATION - WOMEN

SCALE: ½" = 1'-0"

## MOUNTING HEIGHTS

| MR | HD | TP | SD | GB1 | GB2 | MH | WH |
|---|---|---|---|---|---|---|---|
| BOBRICK B-1556 1830 FRAMELESS MIRROR | ASI - 0133 ROVAL-FULLY RECESSED AUTOMATIC HAND DRYER | BOBRICK JUMBO ROLL DISPENSER #B-2890 | BOBRICK WALL MOUNT DISPENSER #B-5050 | BOBRICK 36" HORIZONTAL GRAB BAR #B-5806X36 | BOBRICK 42" HORIZONTAL GRAB BAR #B-5806X42 | BOBRICK SURFACE MOUNTED, S.S. SHELF WITH (3) MOP/BROOM HOLDERS, RAG HOOKS AND DRYING ROD #B-224 | WALL HYDRANT, SEE PLUMBING |

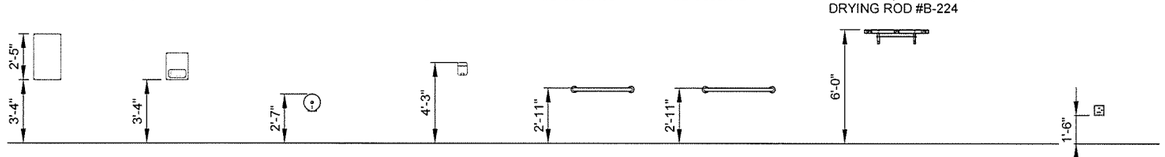


## GENERAL NOTES

1. SEE SHEET A-131 FOR ADDITIONAL DIMENSIONS
2. ECS1, ECS2 & ECS3; SEE ALLOWANCE NO. 3; SECTION 012100 - ALLOWANCES
3. SEE SHEET A-103 FOR CMU TOILET PARTITION AND PARTITION DOOR DETAILS
4. CENTER MIRRORS OVER LAVATORIES, TYPICAL
5. CENTER SOAP DISPENSERS BETWEEN MIRRORS

0 1' 2' 4' 6'

SCALE: ½" = 1'-0"

GARVER
4701 Northshore Drive
N Little Rock, AR 72118
501-376-3633
www.GarverUSA.com

REGISTERED ARCHITECT Garver, LLC License No. LL111 STATE OF ARKANSAS

REGISTERED ARCHITECT Greg A. Archer License No. 2671 STATE OF ARKANSAS 10/1/15

| Symbol | Description | Date | Appr. |
|---|---|---|---|
| IFC | ISSUED FOR CONSTRUCTION | 10/1/15 | JRR |

Job Number 060451

Submitted by: John T. Watkins, III, PE, SE, Director, Federal Services

Designed by: J RAMSEY | Plot Date: 10/1/15 | Plot Scale: 1:1

Drawn by: J RAMSEY | Dwg Code: - | N/A

Checked by: G. ARCHER | N/A

File Name: AH15WR-A-431.DWG | N/A

ARKANSAS HIGHWAY AND TRANSPORTATION DEPARTMENT
ARKANSAS TOURIST INFORMATION CENTER
(WHITE RIVER) (S)
JOB 061451

TRUCKER-VENDING BUILDING
INTERIOR ELEVATIONS

Sheet Reference Number:

A-431

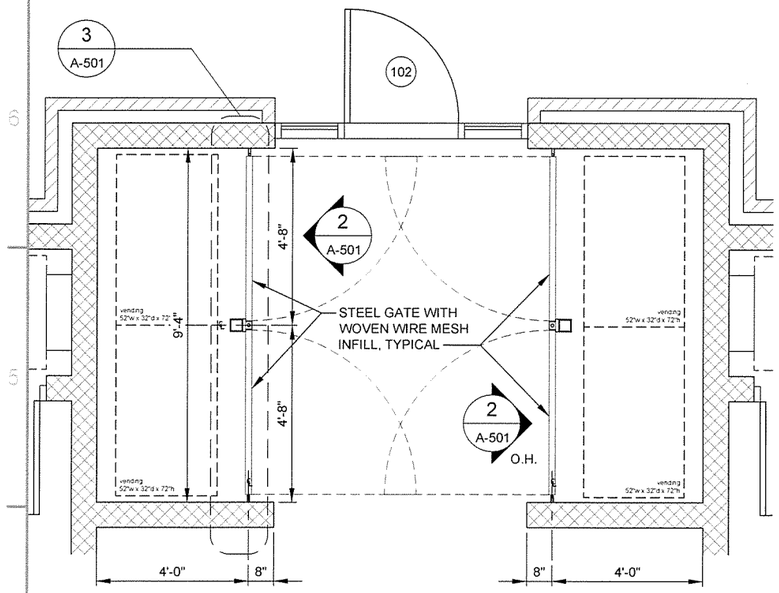


PLAN NORTH

1 A-501 ENLARGED VENDING AREA PLAN

SCALE: 1/2" = 1'-0"

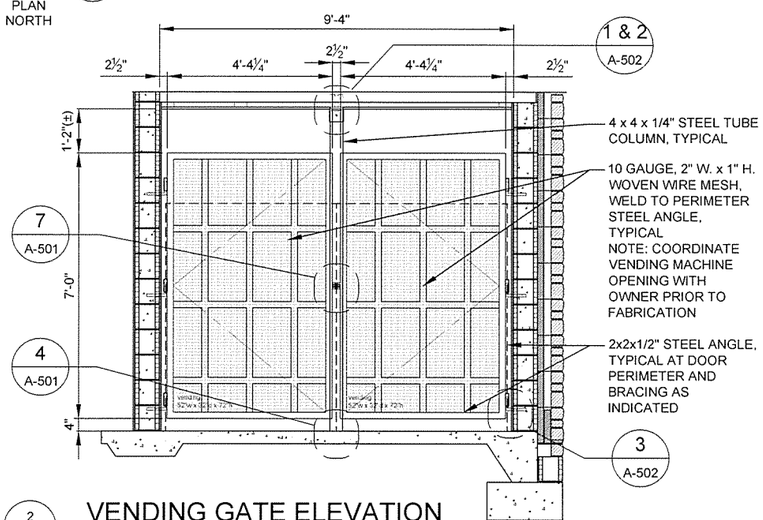


2 A-501 VENDING GATE ELEVATION

SCALE: 1/2" = 1'-0"

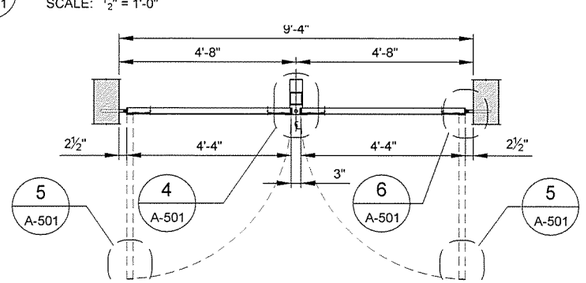


3 A-501 VENDING GATE PLAN

SCALE: 1/2" = 1'-0"

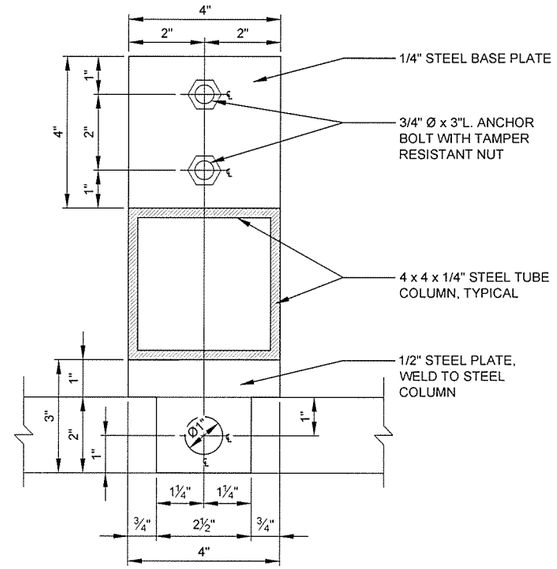


4 A-501 REMOVABLE JAMB

SCALE: HALF SIZE

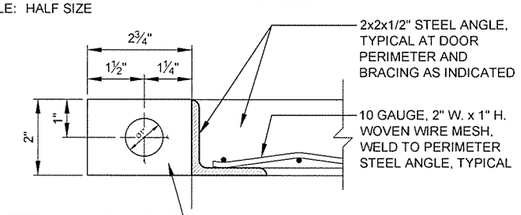


5 A-501 GATE JAMB/LOCK DETAIL

SCALE: HALF SIZE

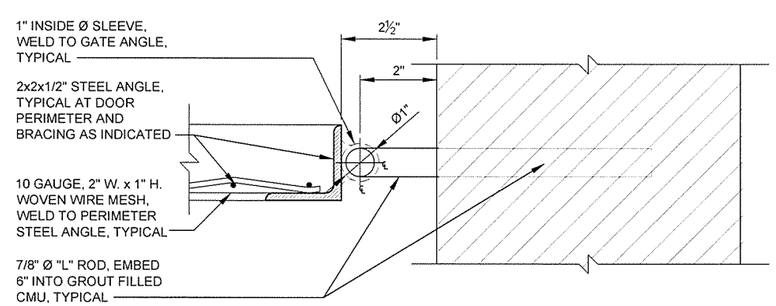


6 A-501 GATE PIVOT DETAIL

SCALE: HALF SIZE

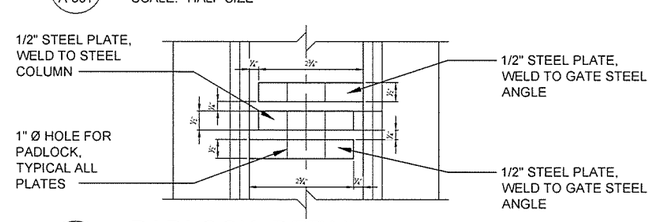


7 A-501 PADLOCK DETAIL

SCALE: HALF SIZE

0 1' 2' 4' 6'

SCALE: 1/2" = 1'-0"

0 1" 2" 4" 6"

SCALE: HALF SIZE


GARVER
4701 Northshore Drive
N Little Rock, AR 72118
501-376-3633
www.GarverUSA.com


REGISTERED ARCHITECT Garver, LLC License No. LL111 STATE OF ARKANSAS

REGISTERED ARCHITECT Greg A. Archer License No. 2671 10/1/15 STATE OF ARKANSAS

| Symbol | Description | Date | Appr. |
|---|---|---|---|
| IFC | ISSUED FOR CONSTRUCTION | 10/1/15 | JRR |

Designed by: J RAMSEY
Drawn by: J RAMSEY
Checked by: G ARCHER
Submitted by: John T. Vaughn, III, PE, SE, Director, Federal Services
Plot Date: 10/1/15
Plot Scale: 1:1
Dwg Code: .
File Name: AH15WR-A-501.DWG
Job Number: 061451
N/A
N/A
N/A

ARKANSAS HIGHWAY AND TRANSPORTATION DEPARTMENT
ARKANSAS TOURIST INFORMATION CENTER
(WHITE RIVER) (S)
JOB 061451

TOURIST INFORMATION CENTER
DETAILS

Sheet Reference Number:

A-501

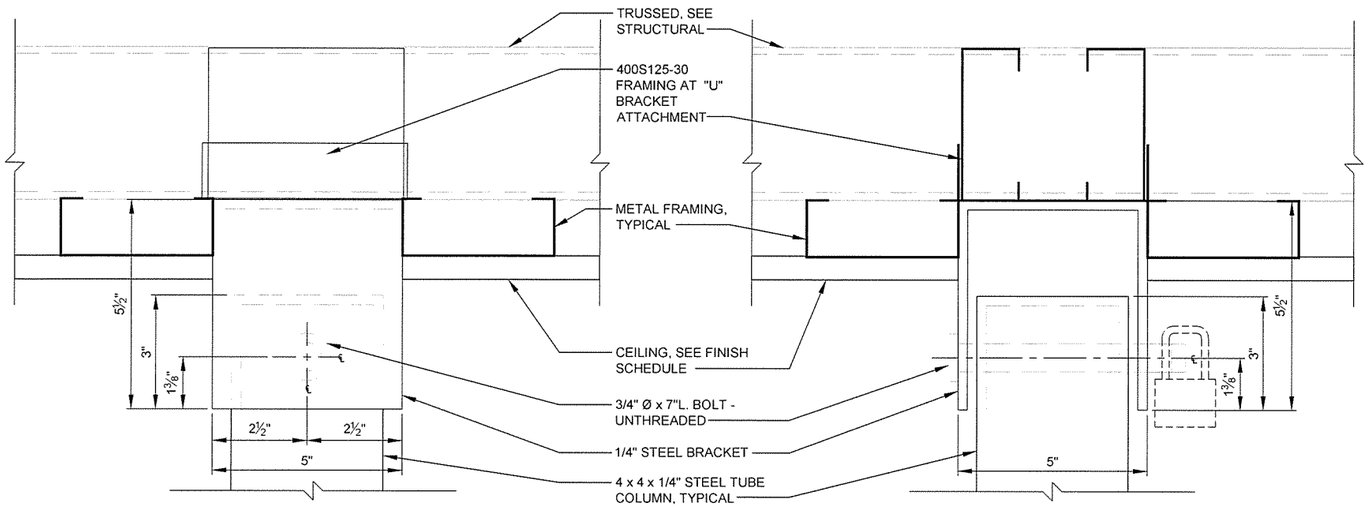


1 / A-502 COLUMN HEAD DETAIL - FRONT
SCALE: HALF SIZE

2 / A-502 COLUMN HEAD DETAIL - SIDE
SCALE: HALF SIZE

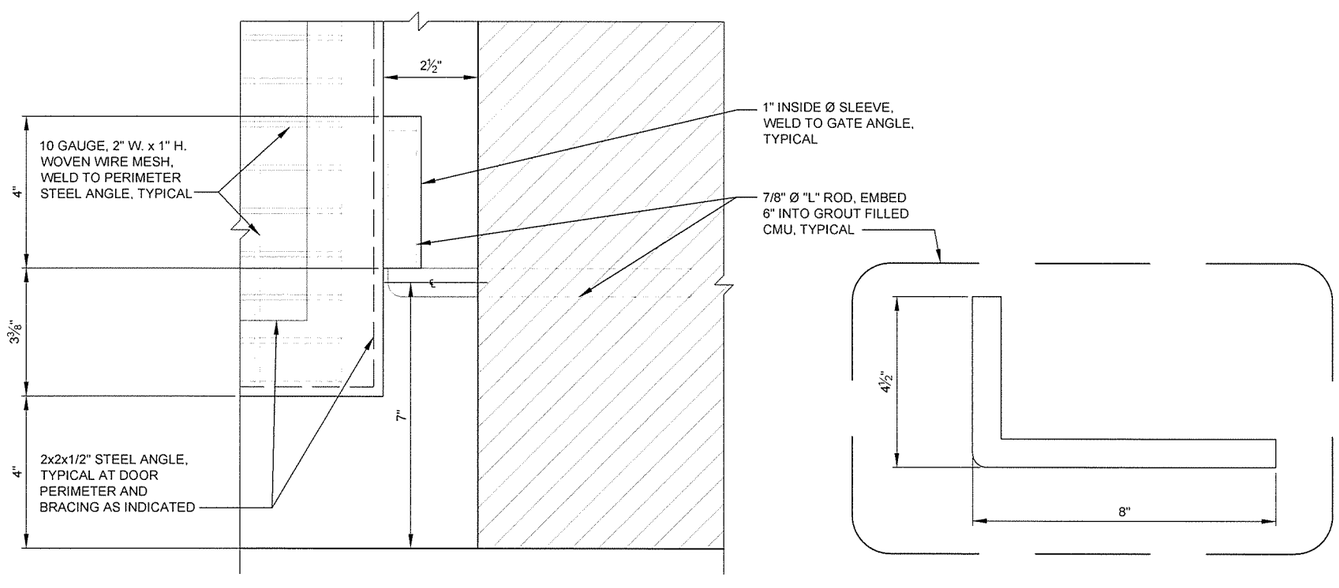


3 / A-502 GATE PIVOT DETAIL
SCALE: HALF SIZE

GARVER
4701 Northshore Drive
N Little Rock, AR 72118
501-376-3633
www.GarverUSA.com

REGISTERED ARCHITECT
Garver, LLC
License No. LL111
STATE OF ARKANSAS

REGISTERED ARCHITECT
Greg A. Archer
License No. 2671
10/1/15
STATE OF ARKANSAS

| Symbol | Description | Date | Appr. |
|---|---|---|---|
| IFC | ISSUED FOR CONSTRUCTION | 10/1/15 | JRR |

Designed by: J RAMSEY
Drawn by: J RAMSEY
Checked by: G. ARCHER
File Name: AH15VR-A-502.DWG
Submitted by: John T. Williams, III, P.E., S.E. Director, Engineering Services
Plot Date: 10/1/15
Plot Scale: 1:1
Dwg Code: .
Job Number: 060451
N/A
N/A
N/A

ARKANSAS HIGHWAY AND TRANSPORTATION DEPARTMENT
ARKANSAS TOURIST INFORMATION CENTER
(WHITE RIVER) (S)
JOB 061451

TOURIST INFORMATION CENTER
DETAILS

Sheet Reference Number:
A-502

Sheet 67 of 130

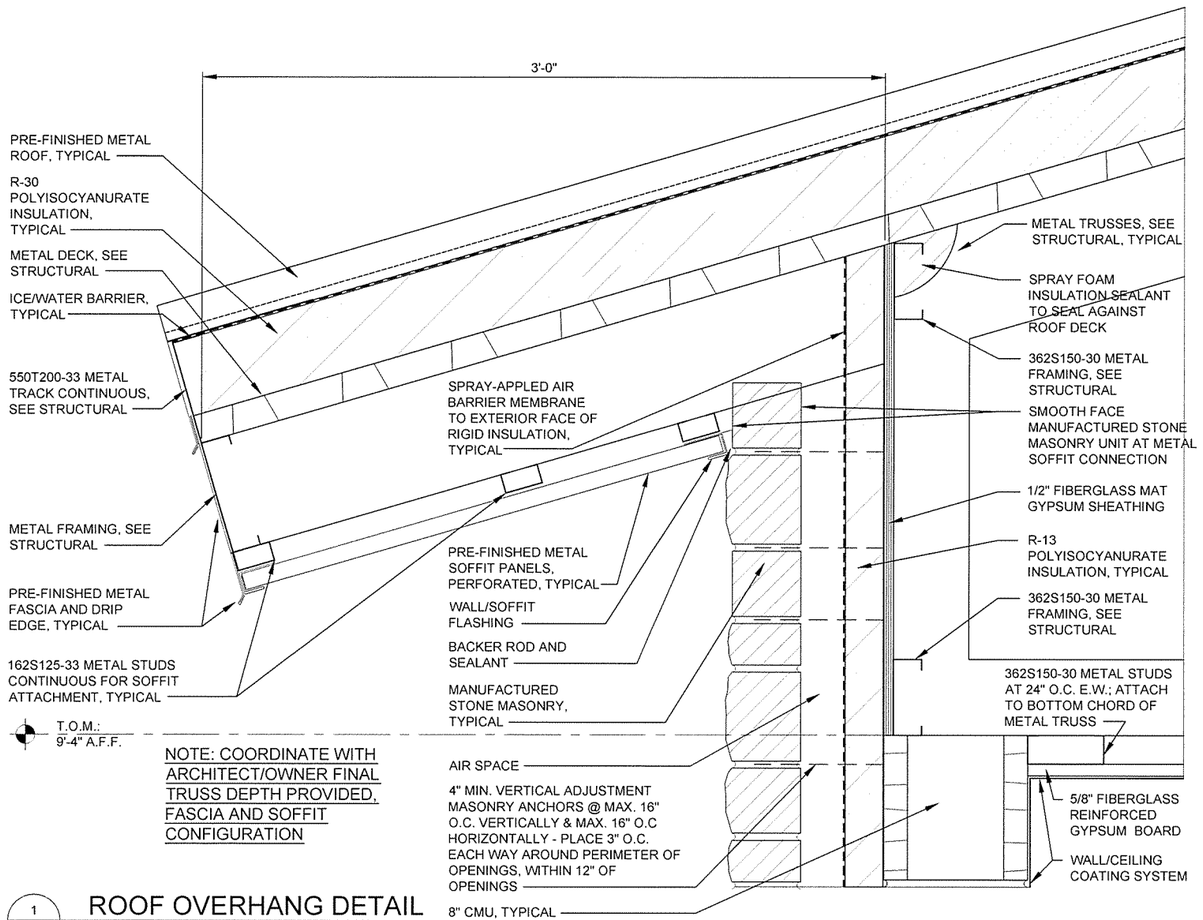


NOTE: COORDINATE WITH ARCHITECT/OWNER FINAL TRUSS DEPTH PROVIDED, FASCIA AND SOFFIT CONFIGURATION

1 / A-503 ROOF OVERHANG DETAIL

SCALE: 3" = 1'-0"

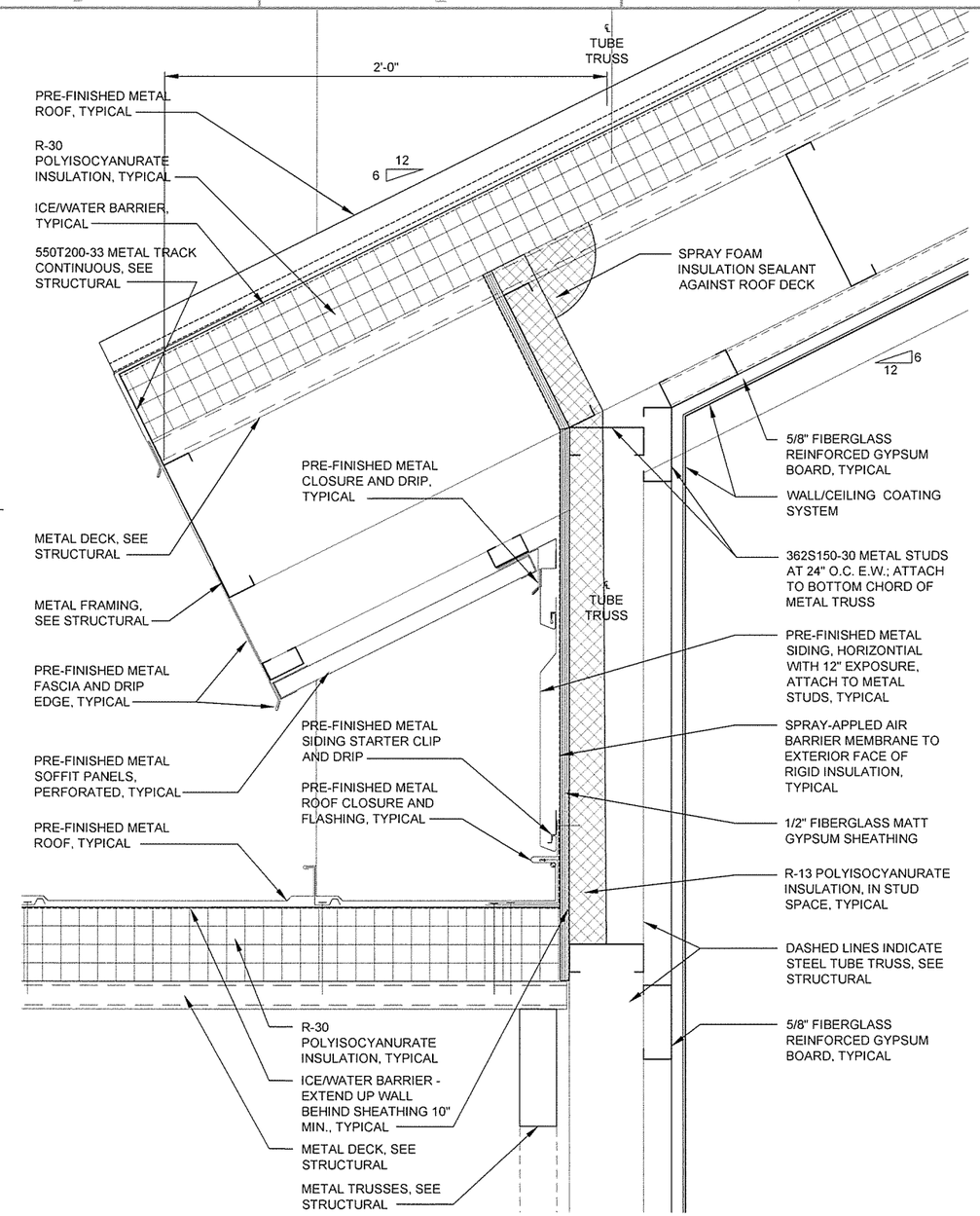


2 / A-503 DORMER OVERHANG DETAIL

SCALE: 3" = 1'-0"

0 3" 6" 9" 1'

SCALE: 3" = 1'-0"


GARVER
4701 Northshore Drive
N Little Rock, AR 72118
501-376-3633
www.GarverUSA.com


REGISTERED ARCHITECT Garver, LLC License No. LL111 STATE OF ARKANSAS

REGISTERED ARCHITECT Gregg A. Archer License No. 2071 STATE OF ARKANSAS 10/1/15

| Symbol | Description | Date | Appr. |
|---|---|---|---|
| IFC | ISSUED FOR CONSTRUCTION | 10/1/15 | JRR |

Job Number 060451

Submitted by: John T. Vickers, III, P.E., SE Discipline: Structural/Seismic — N/A

Designed by: J RAMSEY — Plot Date: 10/1/15 — Plot Scale: 1:1 — N/A

Drawn by: J RAMSEY — Drwg Code: - — N/A

Checked by: G. ARCHER — File Name: AHTSWR-A-503.DWG — N/A

ARKANSAS HIGHWAY AND TRANSPORTATION DEPARTMENT
ARKANSAS TOURIST INFORMATION CENTER
(WHITE RIVER) (S)
JOB 061451

TOURIST INFORMATION CENTER
DETAILS

Sheet Reference Number:

A-503

Sheet 68 of 130

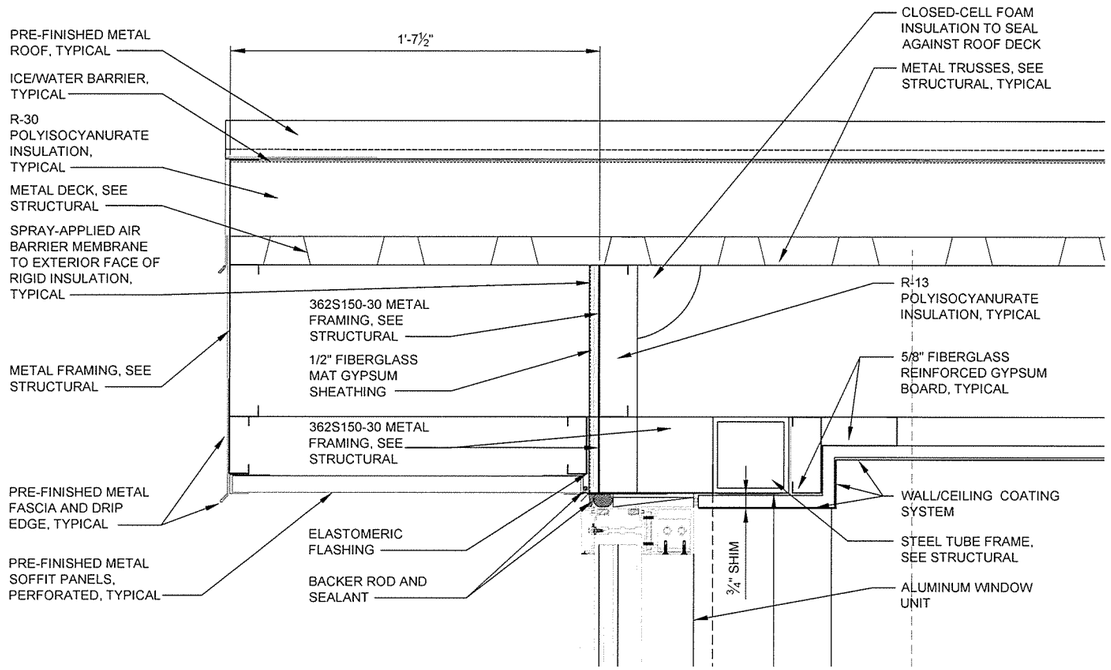


1 A-504 DORMER OVERHANG
SCALE: 3" = 1'-0"

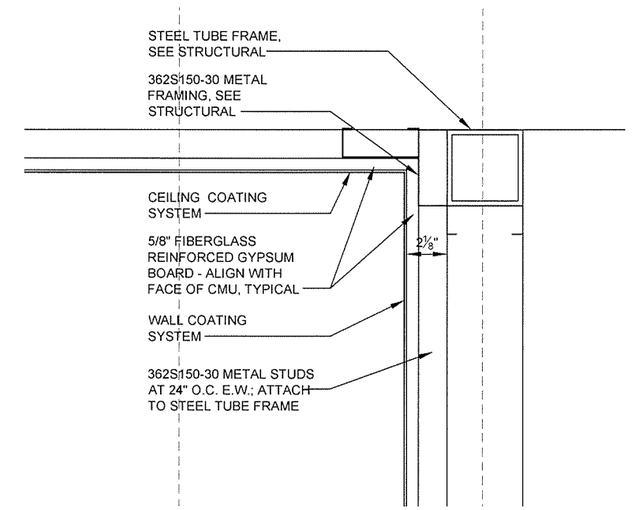


3 A-504 CEILING/WALL DETAIL
SCALE: 3" = 1'-0"

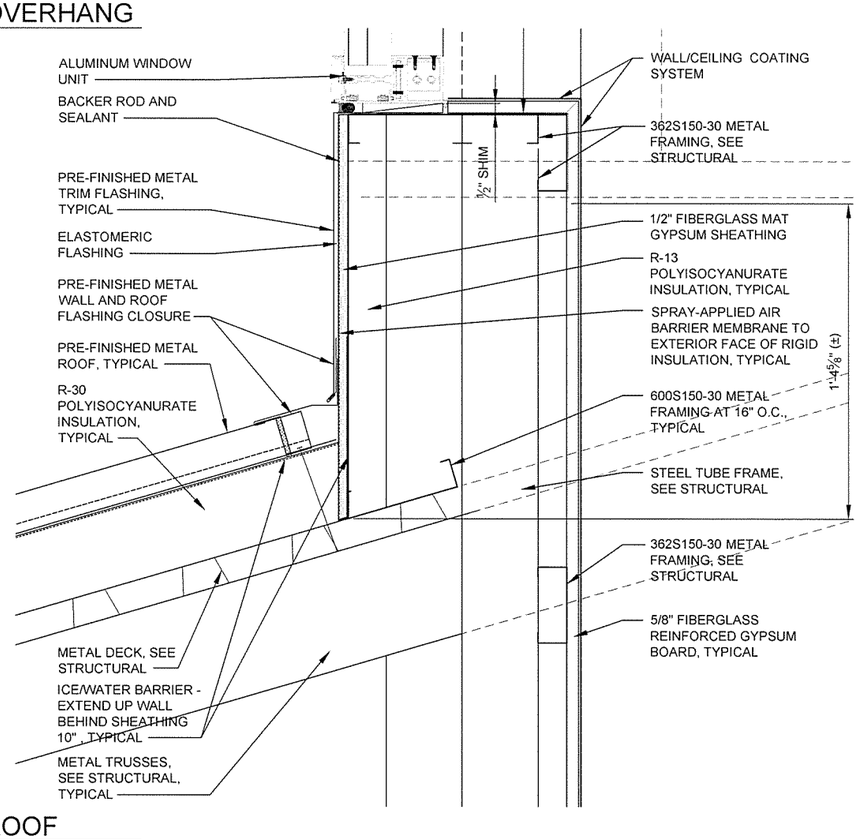


2 A-504 DORMER ROOF
SCALE: 3" = 1'-0"

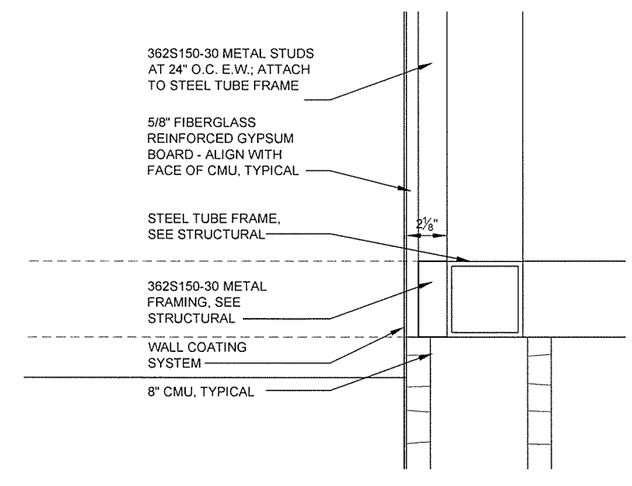


4 A-504 WALL/METAL FRAMING DETAIL
SCALE: 3" = 1'-0"

0 3" 6" 9" 1'
SCALE: 3" = 1'-0"

GARVER
4701 Northshore Drive
N Little Rock, AR 72118
501-376-3533
www.GarverUSA.com

REGISTERED ARCHITECT Garver, LLC License No. LL111 STATE OF ARKANSAS

REGISTERED ARCHITECT Greg A. Archer License No. 2871 10/1/15 STATE OF ARKANSAS

| Symbol | Description | Date | Appr. |
|---|---|---|---|
| IFC | ISSUED FOR CONSTRUCTION | 10/1/15 | JRR |

Job Number 060451
Submitted by: John T. Watkins, III, PE, SE Director, Federal Services
Plot Date 10/1/15
Plot Scale 1:1
Designed by: J RAMSEY
Drawn by: J RAMSEY
Checked by: G ARCHER
Dwg Code N/A
File Name A415WR-A-504 DWG

ARKANSAS HIGHWAY AND TRANSPORTATION DEPARTMENT
ARKANSAS TOURIST INFORMATION CENTER
(WHITE RIVER) (S)
JOB 061451

TOURIST INFORMATION CENTER
DETAILS

Sheet Reference Number:
A-504

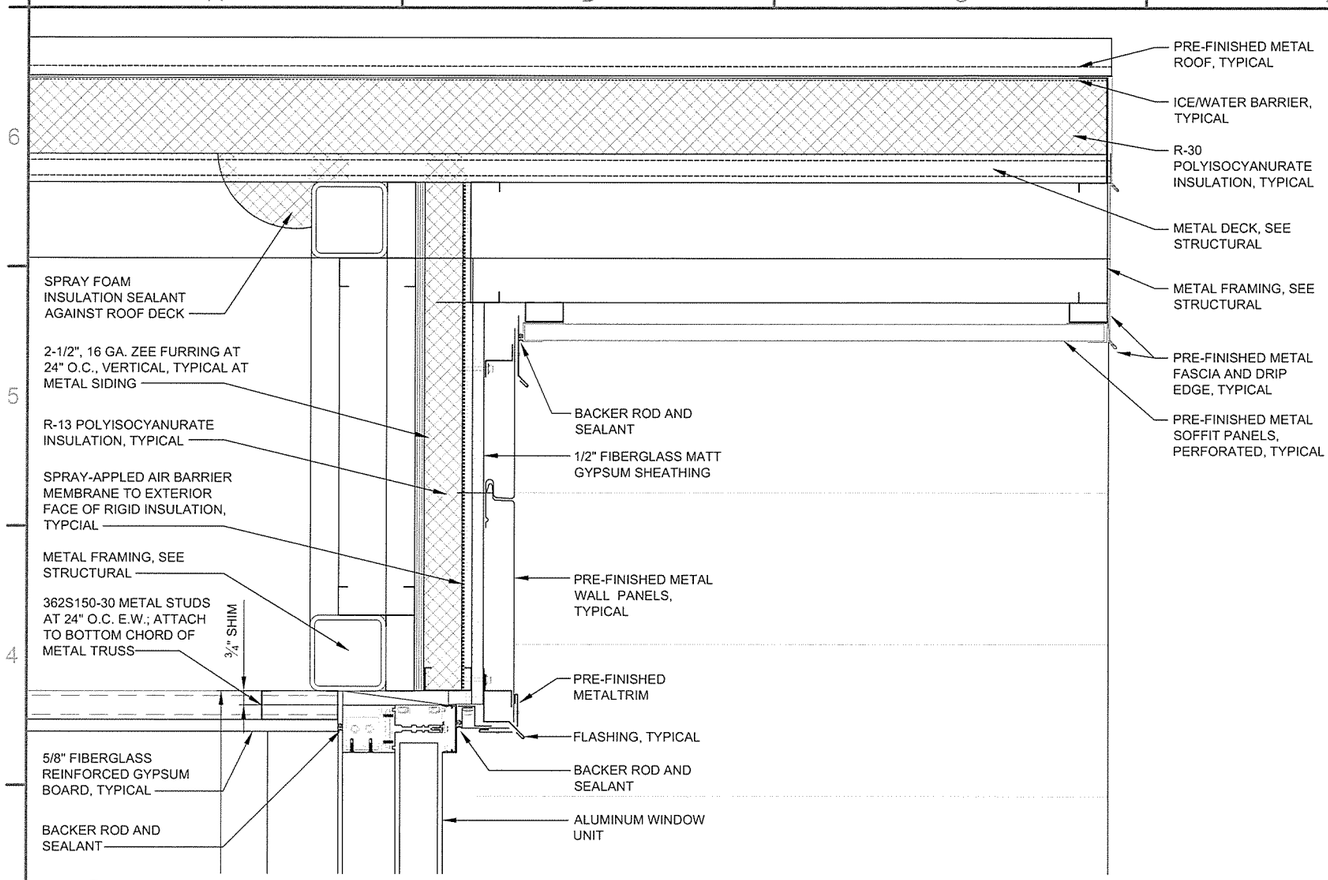


1 A-505 WINDOW HEAD ROOF DETAIL

SCALE: 3" = 1'-0"

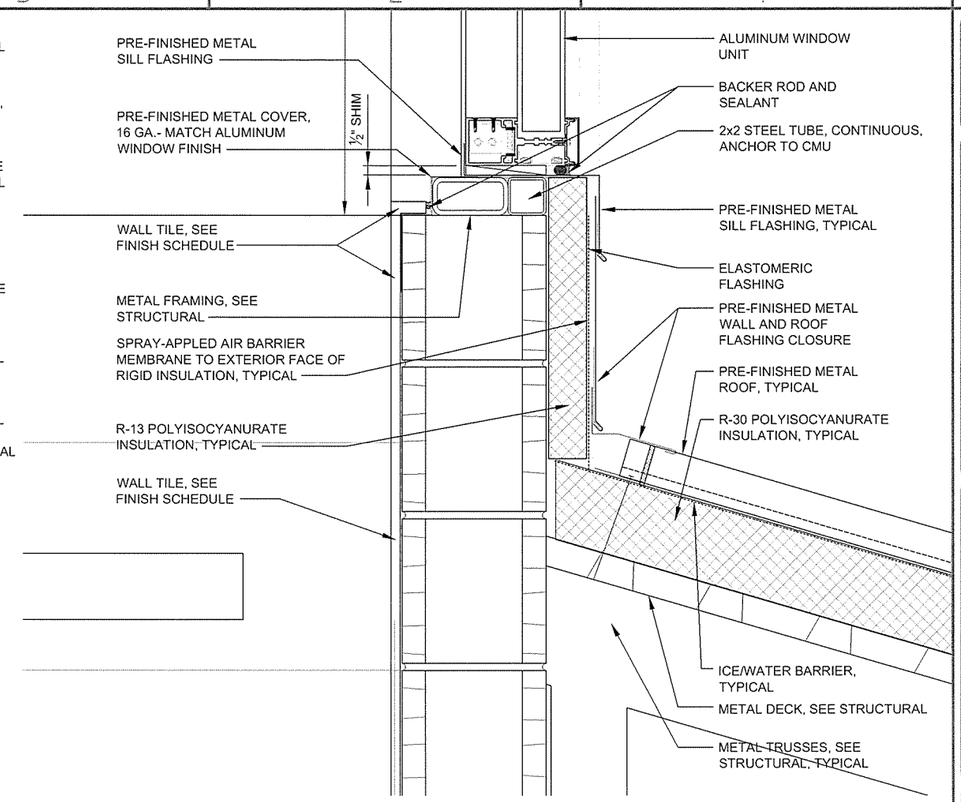


2 A-505 WINDOW SILL ROOF DETAIL

SCALE: 3" = 1'-0"

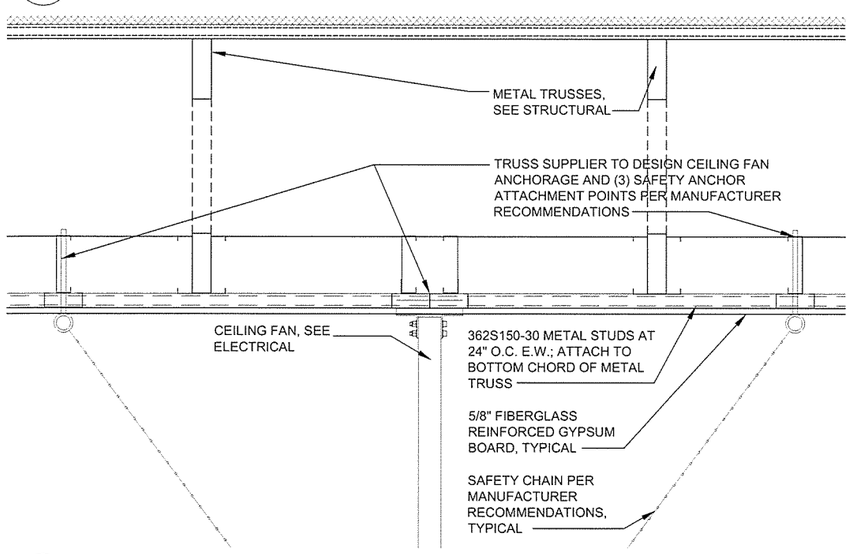


4 A-505 CEILING FAN DETAIL

SCALE: $1\frac{1}{2}$" = 1'-0"

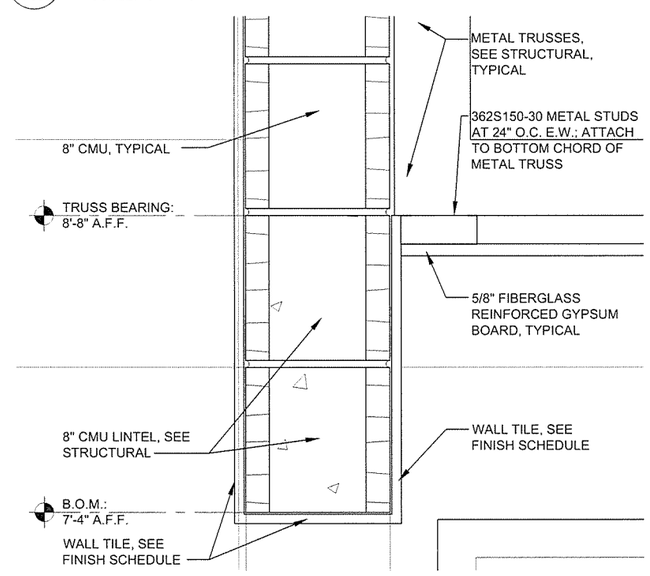


3 A-505 VENDING OPENING DETAIL

SCALE: 3" = 1'-0"

0 3" 6" 9" 1'

SCALE: 3" = 1'-0"

GARVER
4701 Northshore Drive
N Little Rock, AR 72118
501-376-3633
www.GarverUSA.com

REGISTERED ARCHITECT Garver, LLC License No. LL111 STATE OF ARKANSAS

REGISTERED ARCHITECT Greg A. Archer License No. 2621 STATE OF ARKANSAS

| Symbol | Description | Date | Appr. |
|---|---|---|---|
| IFC | ISSUED FOR CONSTRUCTION | 10/1/15 | JRR |

Job Number 060451

Submitted by John T. Hussey III, PE, SE Director, Federal Services

Plot Scale: 1:1

Plot Date: 10/2/15

Designed by J. RAMSEY

Drawn by J. RAMSEY

Checked by G. ARCHER

Dwg Code .

File Name AH15WR-A-505.DWG

ARKANSAS HIGHWAY AND TRANSPORTATION DEPARTMENT
ARKANSAS TOURIST INFORMATION CENTER
(WHITE RIVER) (S)
JOB 061451

TOURIST INFORMATION CENTER DETAILS

Sheet Reference Number:

A-505

Sheet 70 of 130

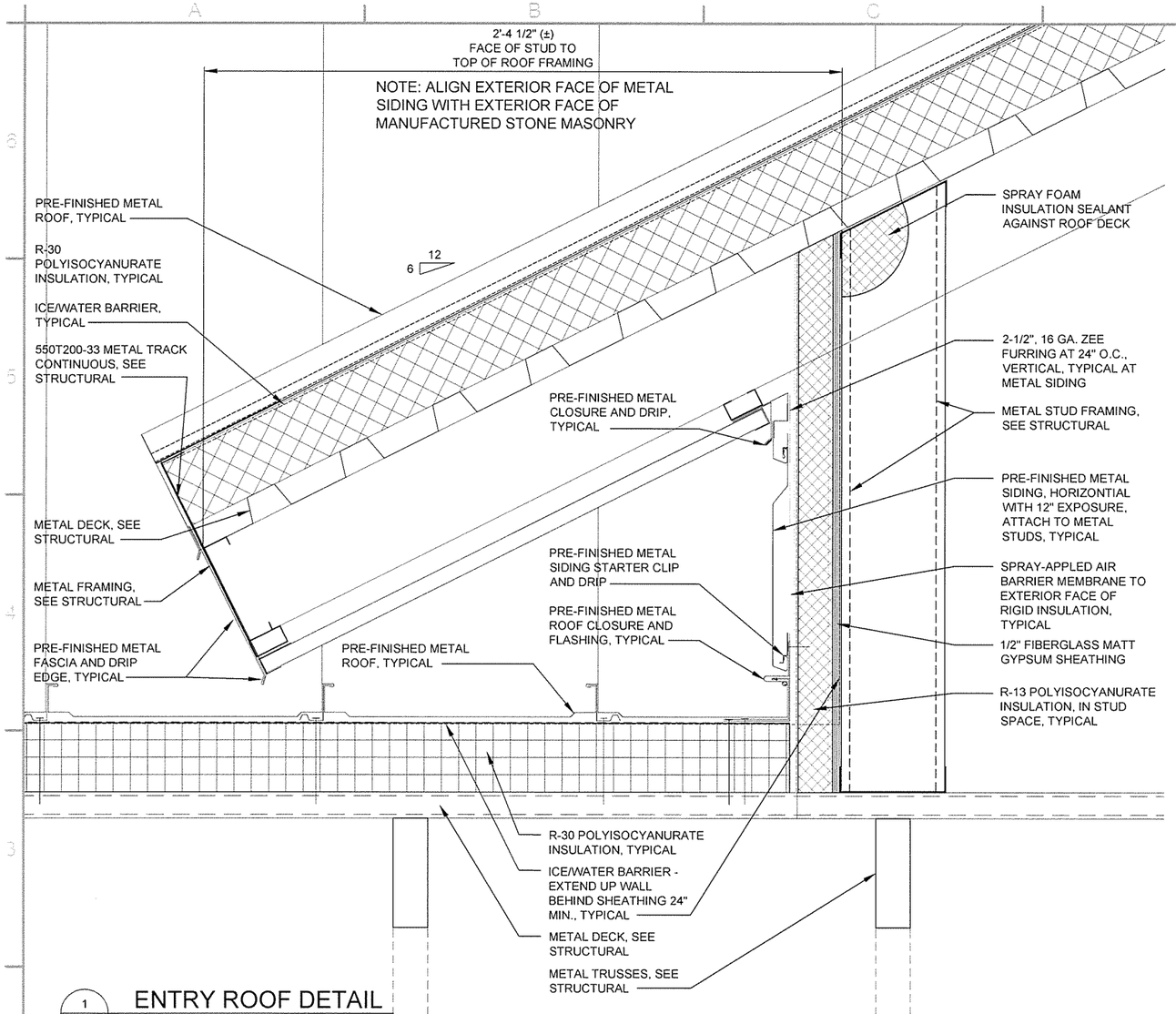


1 / A-506 ENTRY ROOF DETAIL

SCALE: 3" = 1'-0"

0 3" 6" 9" 1'

SCALE: 3" = 1'-0"

GARVER
4701 Northshore Drive
N Little Rock, AR 72118
501-376-3633
www.GarverUSA.com

REGISTERED ARCHITECT
Garver, LLC
License No. LL111
STATE OF ARKANSAS

REGISTERED ARCHITECT
Gene A. Archer
License No. 2671
10/1/15
STATE OF ARKANSAS

| Symbol | Description | Date | Appr. |
|---|---|---|---|
| IFC | ISSUED FOR CONSTRUCTION | 10/1/15 | JRR |

Job Number: 060451

Submitted by: John T. Watkins, III, PE, SE, Director, Federal Services

Plot Date: 10/1/15 | Plot Scale: 1:1

Designed by: J RAMSEY | Drawn by: J RAMSEY | Checked by: G ARCHER | Drwg Code: - | File Name: AH15WR-A-506.DWG

ARKANSAS HIGHWAY AND TRANSPORTATION DEPARTMENT
ARKANSAS TOURIST INFORMATION CENTER
(WHITE RIVER) (S)
JOB 061451

TOURIST INFORMATION CENTER
DETAILS

Sheet Reference Number:
A-506

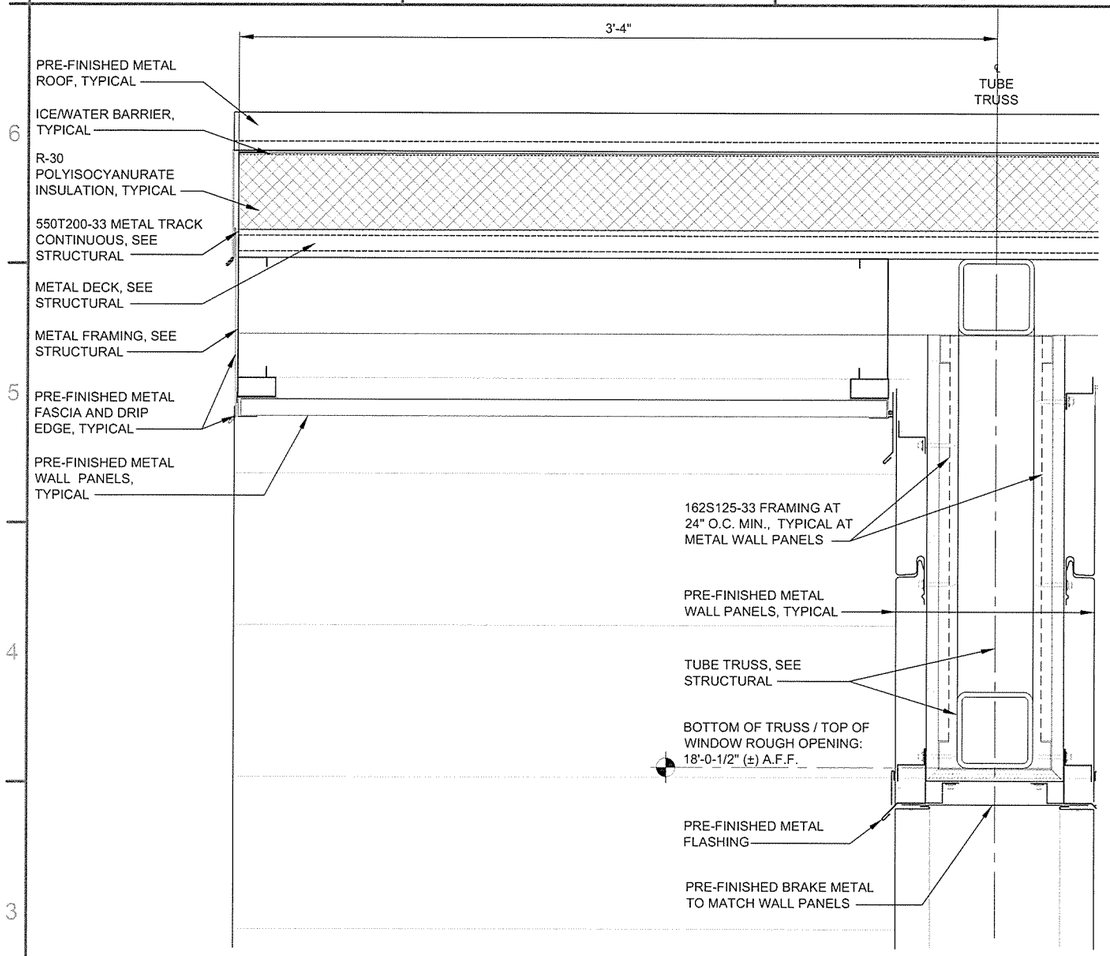


1 A-507 ENTRY SOFFIT DETAIL
SCALE: 3" = 1'-0"

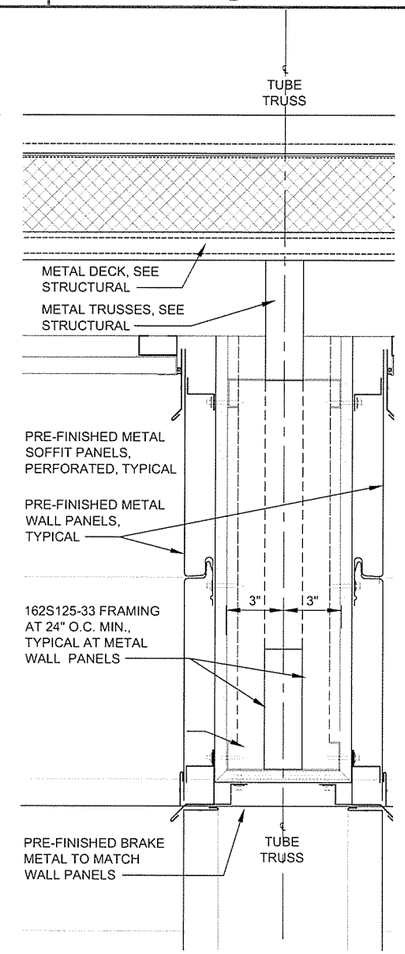


3 A-507 ENTRY STOREFRONT DETAIL
SCALE: 3" = 1'-0"

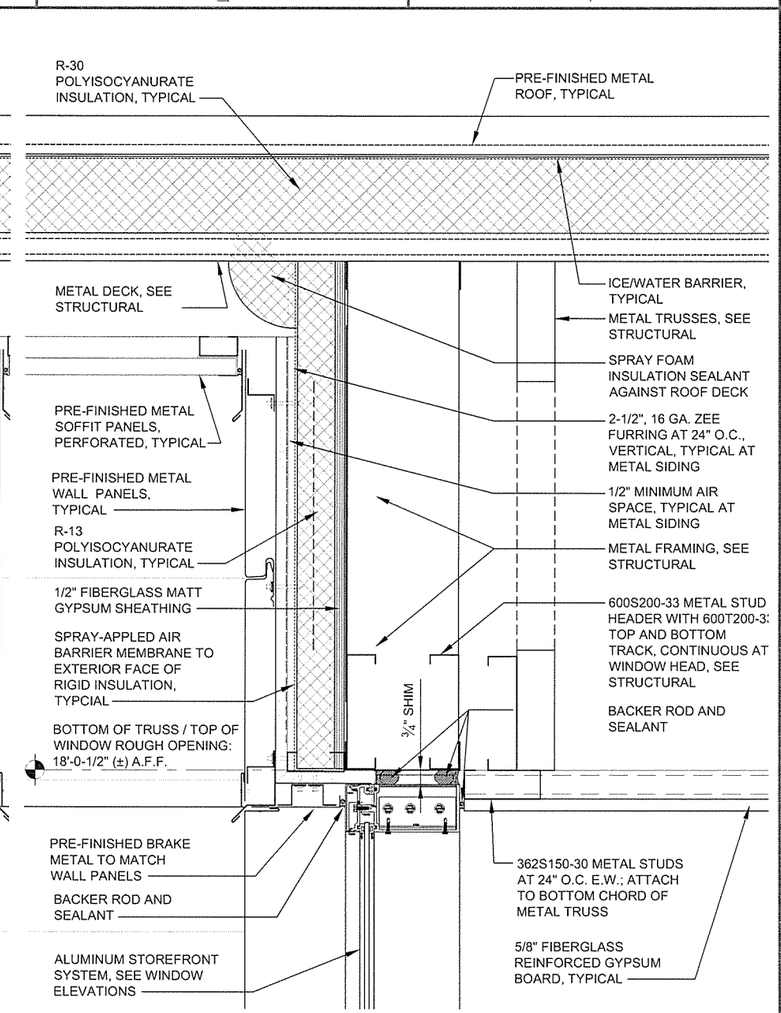


2 A-507 ENTRY STOREFRONT DETAIL
SCALE: 3" = 1'-0"

0 3" 6" 9" 1'
SCALE: 3" = 1'-0"

GARVER
4701 Northshore Drive
N Little Rock, AR 72118
501-376-3633
www.GarverUSA.com

REGISTERED ARCHITECT
Garver, LLC
License No. LL111
STATE OF ARKANSAS

REGISTERED ARCHITECT
Greg A. Archer
License No. 2671
10/1/15
STATE OF ARKANSAS

| Symbol | Description | Date | Appr |
|---|---|---|---|
| IFC | ISSUED FOR CONSTRUCTION | 10/1/15 | JRR |

Job Number 060451
Submitted by John T. Watkins, III, PE, SE Director, Federal Services
Plot Date 10/2/15
Plot Scale 1:1
Designed by J RAMSEY
Drawn by J RAMSEY
Checked by G ARCHER
Dwg Code
File Name AH15WR-A-507.DWG

ARKANSAS HIGHWAY AND TRANSPORTATION DEPARTMENT
ARKANSAS TOURIST INFORMATION CENTER
(WHITE RIVER) (S)
JOB 061451

TOURIST INFORMATION CENTER DETAILS

Sheet Reference Number:
A-507

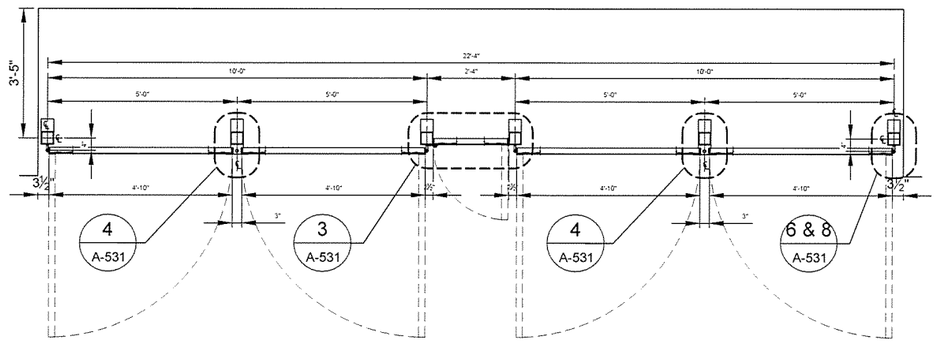


## 1 / A-531 ENLARGED FLOOR PLAN - VENDING AREA

SCALE: ½" = 1'-0"

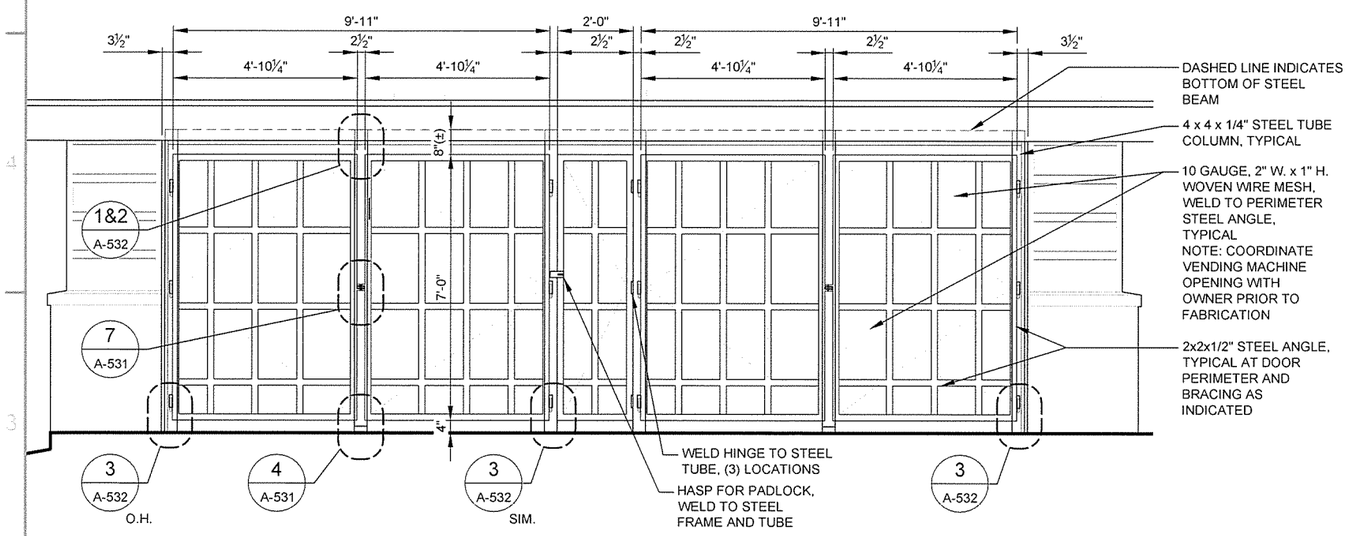


## 2 / A-531 VENDING GATE ELEVATION

SCALE: ½" = 1'-0"

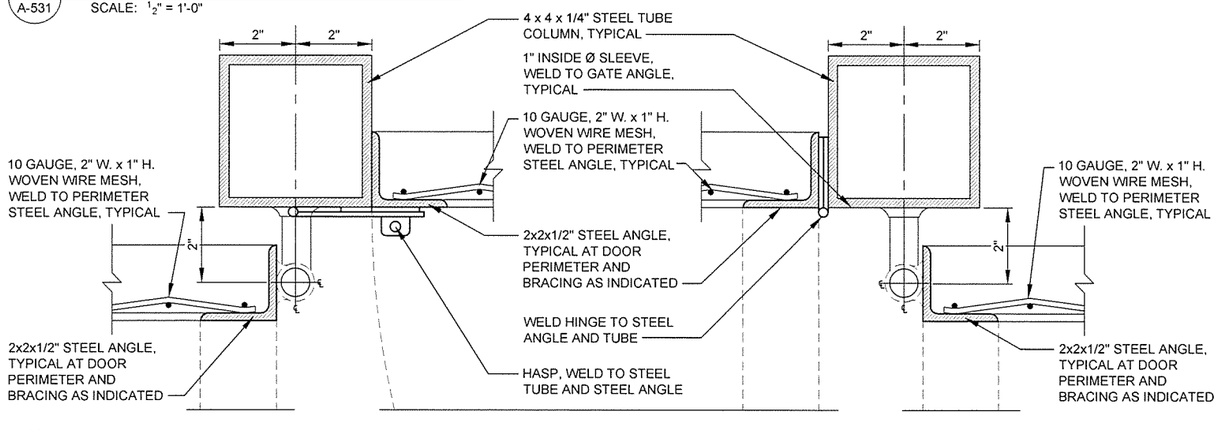


## 3 / A-531 VENDING DOOR JAMBS

SCALE: HALF SIZE

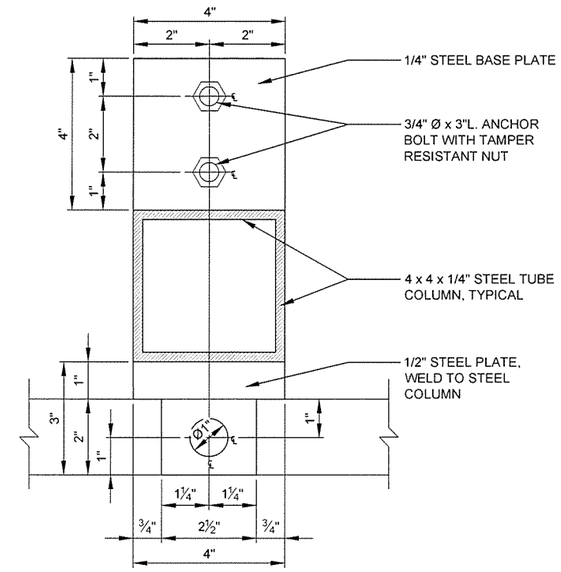


## 4 / A-531 REMOVABLE JAMB

SCALE: HALF SIZE

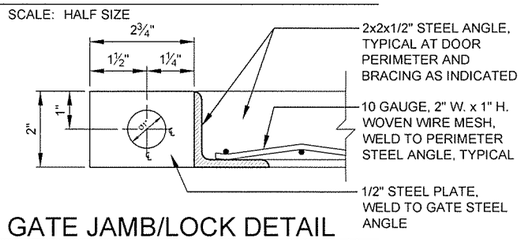


## 5 / A-531 GATE JAMB/LOCK DETAIL

SCALE: HALF SIZE

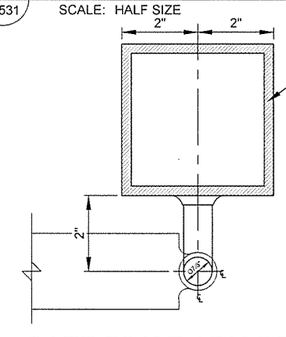


## 6 / A-531 GATE PIVOT ARM DETAIL

SCALE: HALF SIZE

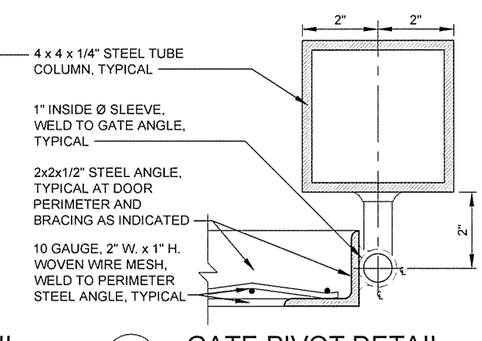


## 8 / A-531 GATE PIVOT DETAIL

SCALE: HALF SIZE

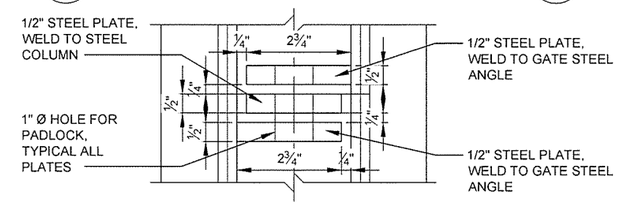


## 7 / A-531 PADLOCK DETAIL

SCALE: HALF SIZE

0 2' 4' 8' 12'

SCALE: ¼" = 1'-0"


GARVER
4701 Northshore Drive
N Little Rock, AR 72118
501-376-3633
www.GarverUSA.com


REGISTERED ARCHITECT
Garver, LLC
License No. LL111
STATE OF ARKANSAS

REGISTERED ARCHITECT
Greg A. Archer
License No. 2677
STATE OF ARKANSAS

| Symbol | Description | Date | Appr |
|---|---|---|---|
| IFC | ISSUED FOR CONSTRUCTION | 10/1/15 | JRR |

Job Number 060451

Submitted by: John T. Tilghman, P.E., SE, Director, Federal Services

| | | | |
|---|---|---|---|
| Designed by J RAMSEY | Plot Date 10/1/15 | Plot Scale 1:1 | N/A |
| Drawn by J RAMSEY | Dwg Code . | N/A | . |
| Checked by G. ARCHER | File Name AH15WR-A-531.DWG | N/A | . |

ARKANSAS HIGHWAY AND TRANSPORTATION DEPARTMENT
ARKANSAS TOURIST INFORMATION CENTER
(WHITE RIVER) (S)
JOB 061451

TRUCKER-VENDING BUILDING DETAILS

Sheet Reference Number:

A-531

Sheet 73 of 130

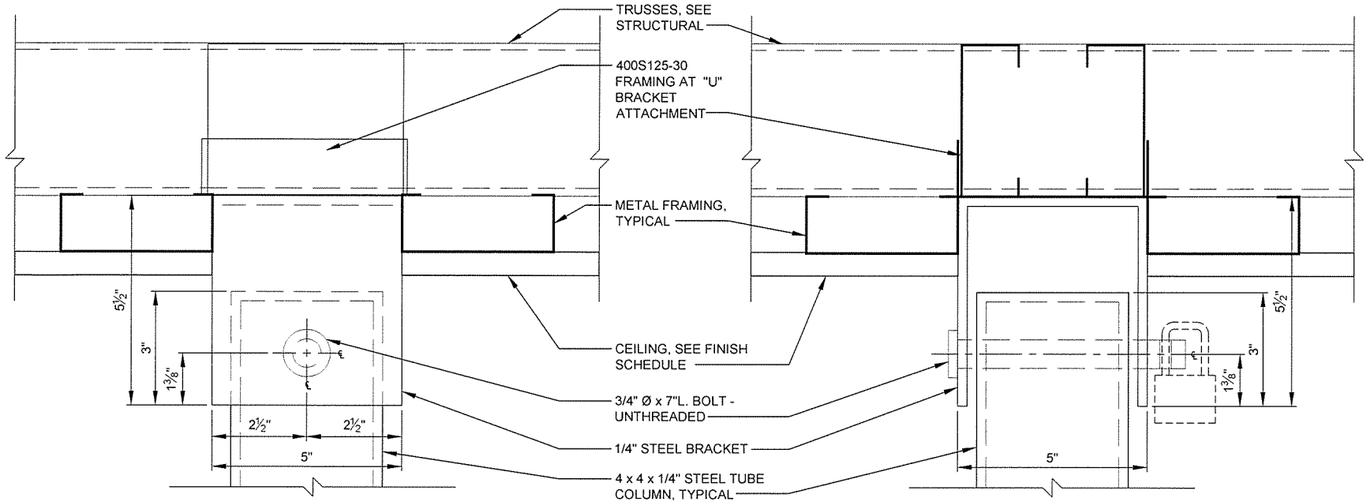


1 / A-532 COLUMN HEAD DETAIL-FRONT

SCALE: HALF SIZE

2 / A-532 COLUMN HEAD DETAIL-SIDE

SCALE: HALF SIZE

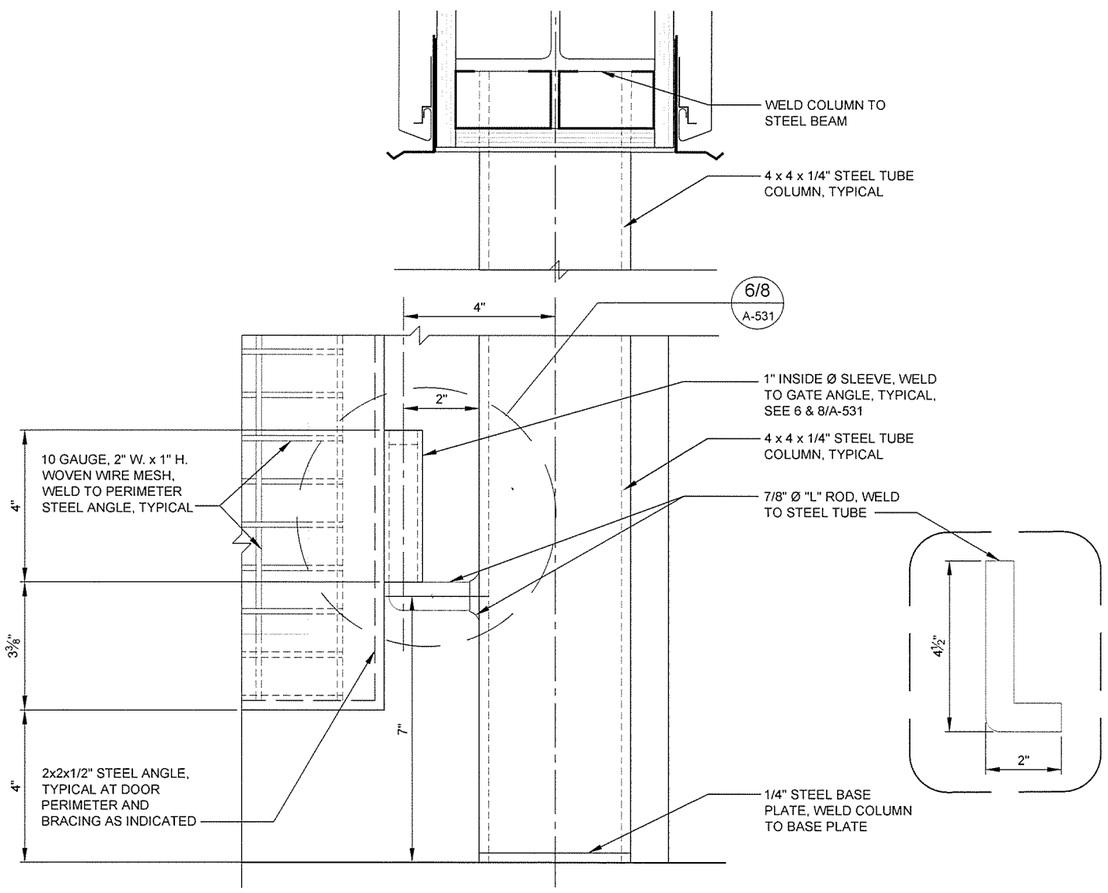


3 / A-532 COLUMN BASE/HEAD DETAIL

SCALE: HALF SIZE

0 2' 4' 8' 12'

SCALE: ¼" = 1'-0"

GARVER
4701 Northshore Drive
N Little Rock, AR 72118
501-376-3633
www.GarverUSA.com

REGISTERED ARCHITECT
Garver, LLC
License No. LL111
STATE OF ARKANSAS

REGISTERED ARCHITECT
Greg A. Archer
License No. 2671
10/1/15
STATE OF ARKANSAS

| Symbol | Description | Date | Appr. |
|---|---|---|---|
| IFC | ISSUED FOR CONSTRUCTION | 10/1/15 | JRR |

Designed by: J RAMSEY
Drawn by: J DEMAINE
Plot Date: 10/1/15
Plot Scale: 1:1
Checked by: G ARCHER
Drwg Code: -
File Name: AH15WR-A-532.DWG
Submitted by: John T. Watkins, III, PE, SE, Director, Federal Services
Job Number: 060451
N/A
N/A
N/A

ARKANSAS HIGHWAY AND TRANSPORTATION DEPARTMENT
ARKANSAS TOURIST INFORMATION CENTER
(WHITE RIVER) (S)
JOB 061451

TRUCKER-VENDING BUILDING DETAILS

Sheet Reference Number:

A-532

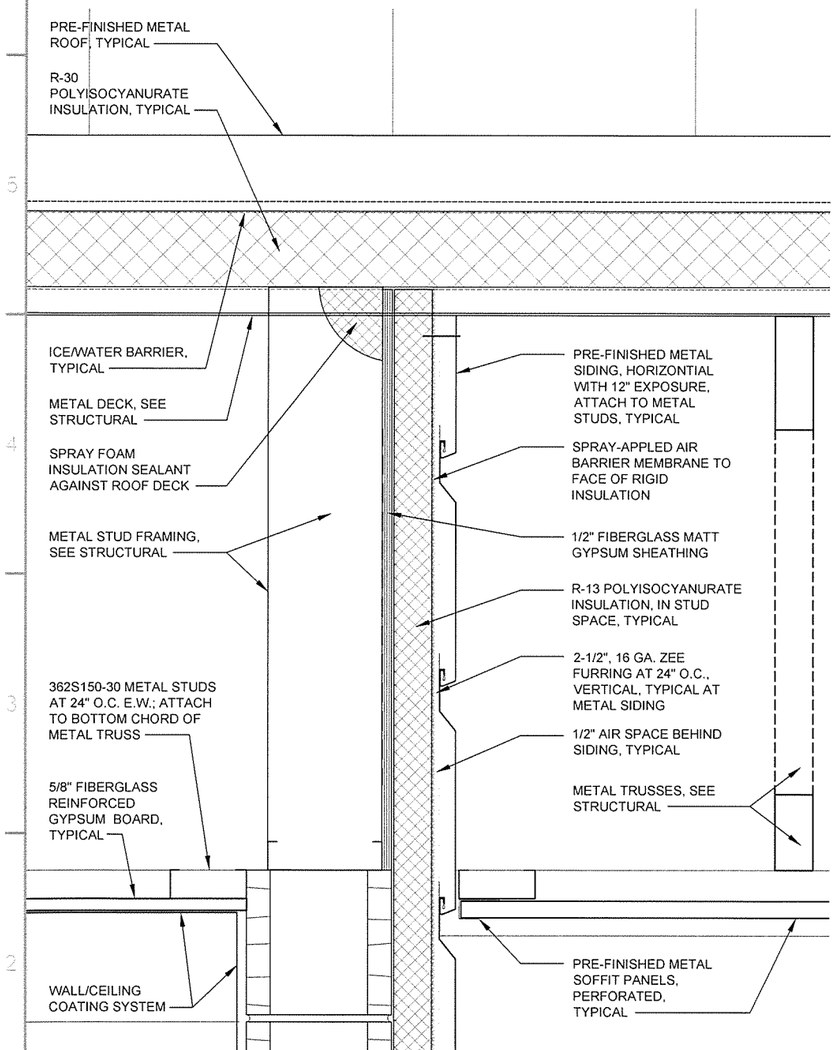


1 A-533 **WALL DETAIL**
SCALE: 3" = 1'-0"

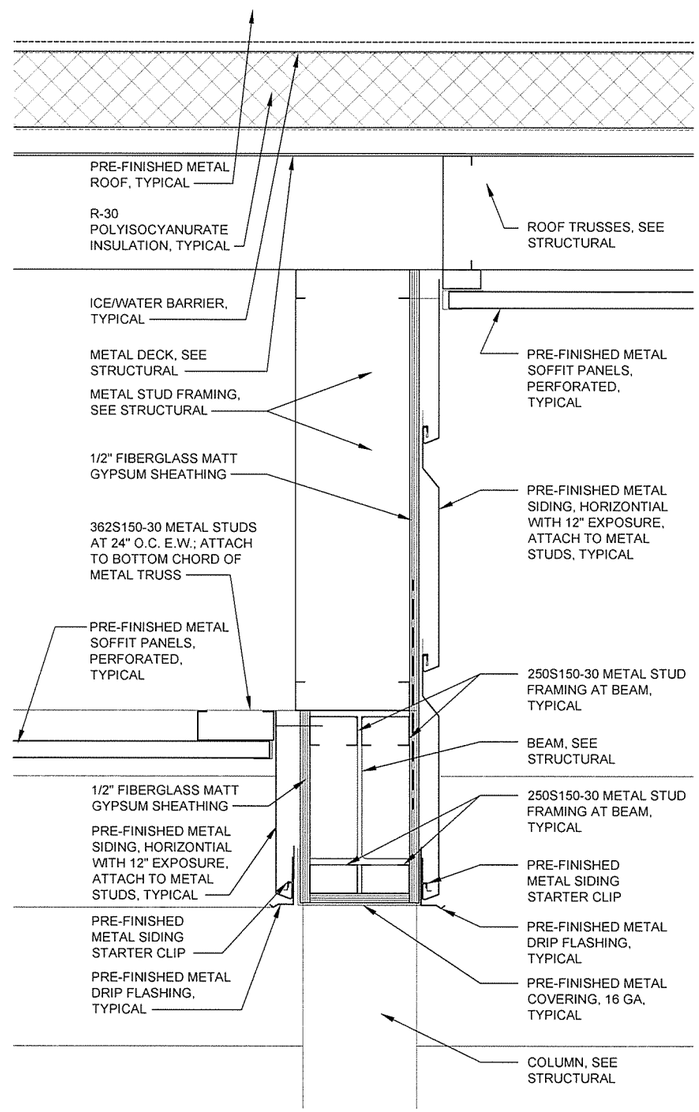


2 A-533 **WALL/BEAM DETAIL**
SCALE: 3" = 1'-0"

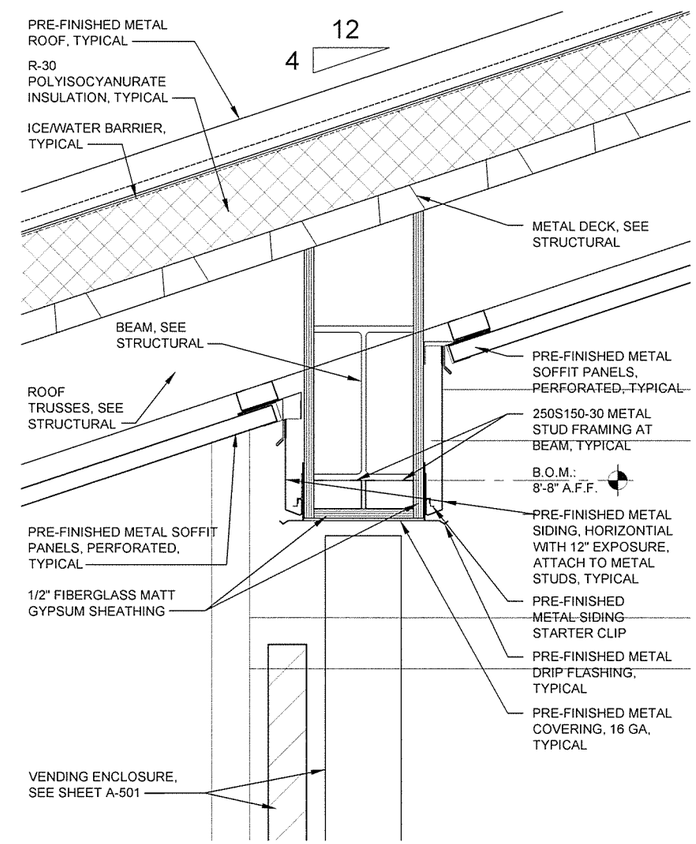


3 A-533 **WALL/BEAM DETAIL**
SCALE: 3" = 1'-0"

0 3" 6" 9" 1'
SCALE: 3" = 1'-0"

GARVER
4701 Northshore Drive
N Little Rock, AR 72118
501-376-3633
www.GarverUSA.com

REGISTERED ARCHITECT
Garver, LLC
License No. LL111
STATE OF ARKANSAS

REGISTERED ARCHITECT
Greg A. Archer
License No. 2671
10/1/15
STATE OF ARKANSAS

| Symbol | Description | Date | Appr. |
|---|---|---|---|
| IFC | ISSUED FOR CONSTRUCTION | 10/1/15 | JRR |

Designed by: J RAMSEY
Drawn by: J DEMAINE
Plot Date: 10/1/15
Plot Scale: 1:1
Checked by: G. ARCHER
Drwg Code: -
File Name: AH15VR-A-533.DWG
Job Number: 061451
N/A
N/A
N/A

Submitted by: John T. Watkins, III, PE, SE
Director, Facility Services

ARKANSAS HIGHWAY AND TRANSPORTATION DEPARTMENT
ARKANSAS TOURIST INFORMATION CENTER
(WHITE RIVER) (S)
JOB 061451

TRUCKER-VENDING BUILDING DETAILS

Sheet Reference Number:
A-533

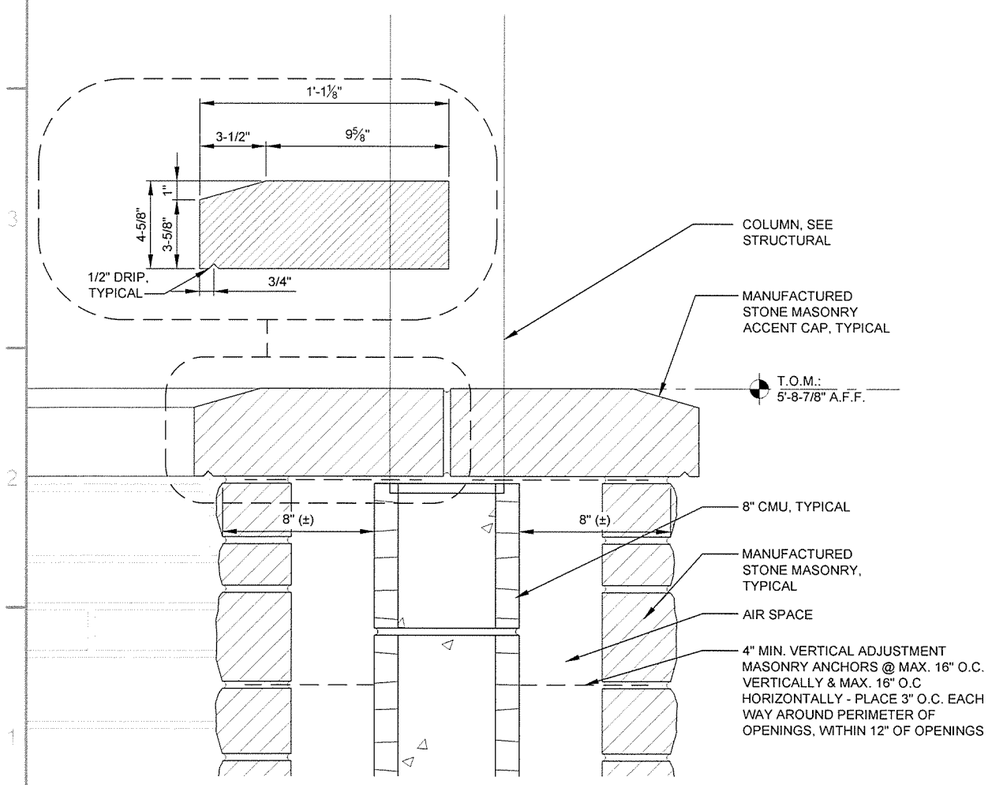


1 / A-534 SCREEN WALL DETAIL

SCALE: 3" = 1'-0"

0 3" 6" 9" 1'

SCALE: 3" = 1'-0"


GARVER
4701 Northshore Drive
N Little Rock, AR 72118
501-376-3633
www.GarverUSA.com


REGISTERED ARCHITECT
Garver, LLC
License No. LL111
STATE OF ARKANSAS

REGISTERED ARCHITECT
Greg A. Archer
License No. 2671
STATE OF ARKANSAS

| Symbol | Description | Date | Appr |
|---|---|---|---|
| IFC | ISSUED FOR CONSTRUCTION | 10/1/15 | JRR |

Designed by: J RAMSEY
Drawn by: J DEMAINE
Checked by: G ARCHER
File Name: AH15WR-A-534 DWG
Submitted by: John T. Watkins, III, PE, SE, Director, Federal Services
Plot Date: 10/1/15
Plot Scale: 1:1
Drwg Code: -
Job Number: 060451
N/A
N/A
N/A

ARKANSAS HIGHWAY AND TRANSPORTATION DEPARTMENT
ARKANSAS TOURIST INFORMATION CENTER
(WHITE RIVER) (S)
JOB 061451

TRUCKER-VENDING BUILDING DETAILS

Sheet Reference Number:
A-534

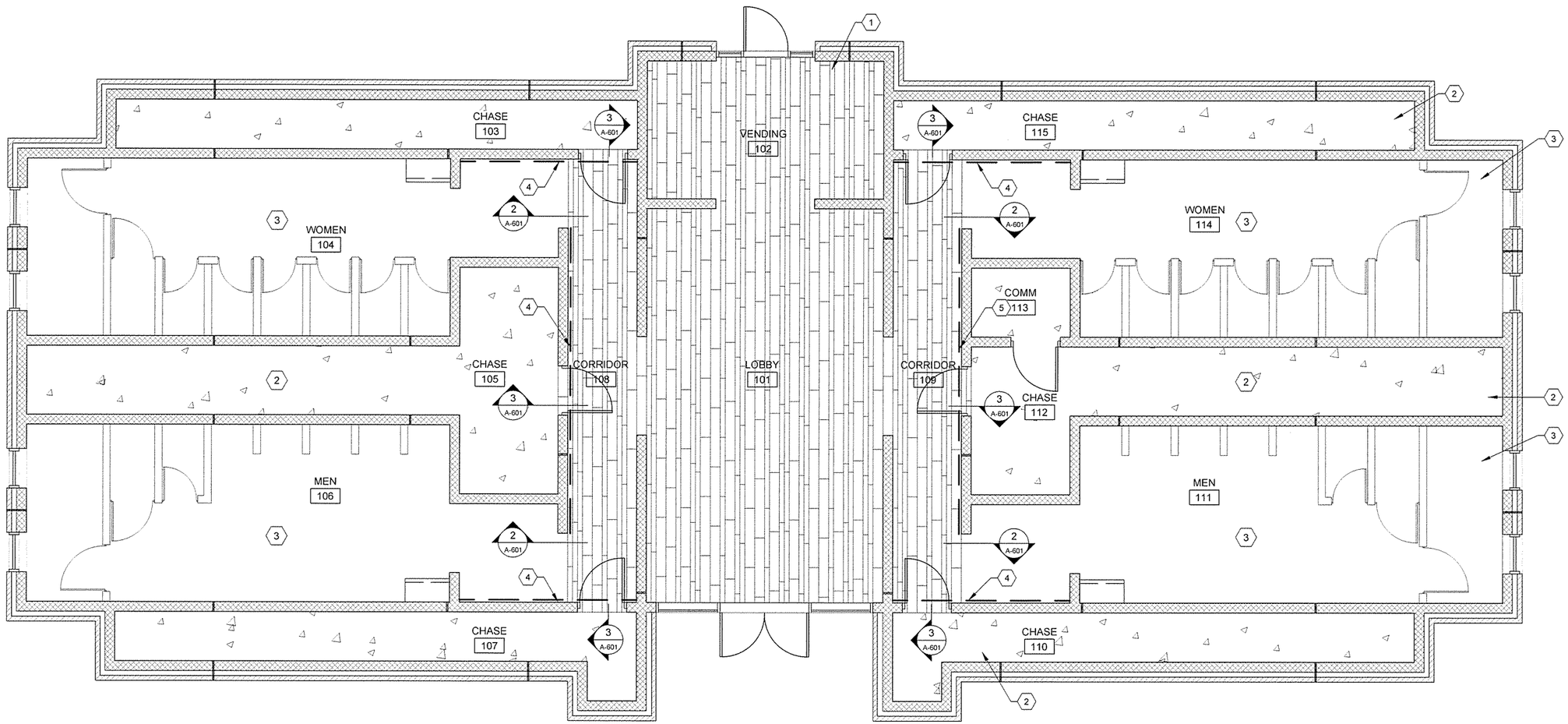


PLAN NORTH

1 A-601 FLOOR PATTERN PLAN
SCALE: 1/4" = 1'-0"

## KEYED NOTES

1. 48" LONG FLOOR TILES, T1
2. SEALED CONCRETE FLOOR
3. COATING SYSTEM FLOOR, ECS3
4. DASHED LINE INDICATES FLOOR TO CEILING VINYL WALL MURAL

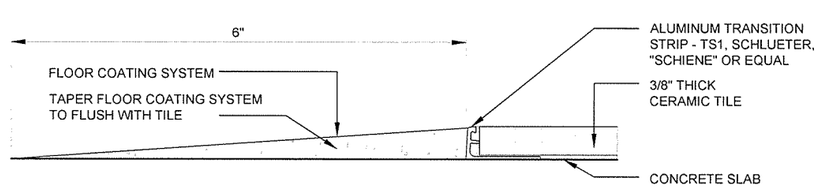


2 A-601 FLOOR TRANSITION DETAIL
SCALE: FULL SIZE

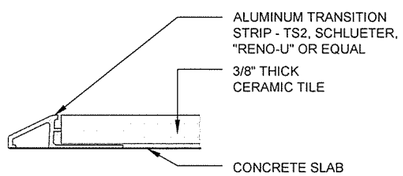


3 A-601 FLOOR TRANSITION DETAIL
SCALE: FULL SIZE

0 2' 4' 8' 12'
SCALE: 1/4" = 1'-0"


GARVER
4701 Northshore Drive
N Little Rock, AR 72118
501-376-3633
www.GarverUSA.com


REGISTERED ARCHITECT
Garver, LLC
License No. LL111
STATE OF ARKANSAS

REGISTERED ARCHITECT
Greg A. Archer
License No. 2871
STATE OF ARKANSAS

| Symbol | Description | Date | Appr. |
|---|---|---|---|
| IFC | ISSUED FOR CONSTRUCTION | 10/1/15 | JRR |

Job Number 060451
Submitted by: John T. Watkins, III, PE, SE Director, Federal Services
Plot Scale 1:1
Plot Date 10/1/15
Drwg Code -
File Name AH15WR-A-601.DWG
Designed by P. MASON
Drawn by P. MASON
Checked by G. ARCHER
N/A
N/A
N/A

ARKANSAS HIGHWAY AND TRANSPORTATION DEPARTMENT
ARKANSAS TOURIST INFORMATION CENTER
(WHITE RIVER) (S)
JOB 061451

TOURIST INFORMATION CENTER
FLOOR PATTERN PLAN

Sheet Reference Number:
A-601

## GENERAL NOTES

IN CASE OF A CONFLICT BETWEEN THE GENERAL NOTES AND THE SPECIFICATIONS, CONSULT THE ENGINEER FOR CLARIFICATION PRIOR TO WORK.

DESIGN DATA

1. DESIGN CODES - (ALL LATEST EDITIONS UNLESS NOTED OTHERWISE.)
   - 2012 ARKANSAS FIRE PREVENTION CODE
   - ASCE 7-10 - MINIMUM DESIGN LOADS FOR BUILDINGS AND OTHER STRUCTURES
   - AISC 360-10
   - ACI 318-11
2. MATERIAL SPECIFICATIONS AND DESIGN STRESSES
   - ANCHOR RODS . . . . . FY = 36,000 PSI (ASTM F1554 WELDABLE)
   - STRUCTURAL STEEL . . . . . FY = 50,000 PSI (ASTM A992, IF UNAVAILABLE (W & WT SHAPES) LOCALLY ASTM A572, GRADE 50)
   - STRUCTURAL STEEL . . . . . FY = 36,000 PSI (ASTM A36) (L & C SHAPES & PLATES)
   - RECTANGULAR HSS . . . . . FY = 46,000 PSI (ASTM A500, GRADE B)
   - ROUND HSS . . . . . FY = 42,000 PSI (ASTM A500, GRADE B)
   - PIPE . . . . . FY = 35,000 PSI (ASTM A53, GRADE B)
   - CAST-IN-PLACE CONCRETE
     - FOOTINGS . . . . . F'c = 4,000 PSI AT 28 DAYS
     - SLAB-ON-GRADE. . . . . F'c = 4,000 PSI AT 28 DAYS
     - ELEVATED SLABS . . . . . F'c = 4,000 PSI AT 28 DAYS
   - REINFORCING STEEL
     - #3 AND LARGER BARS . . . . . FY = 60,000 PSI (ASTM A615, GRADE 60)
3. RISK CATEGORY . . . . . II
4. LIVE LOADS
   - ROOF (NOT REDUCIBLE) . . . . . 20 PSF
   - FLOOR . . . . . 100 PSF
   - ELEVATED SLAB . . . . . 40 PSF
5. WIND LOAD PARAMETERS (ASCE 7-10)
   - BASIC WIND SPEED . . . . . 115 MPH
   - WIND EXPOSURE CATEGORY . . . . . C
   - INTERNAL PRESSURE COEFFICIENT, GCPI . . . . . ±0.18
   - COMPONENTS & CLADDING PRESSURE . . . . . SEE WIND LOADS TABLE
6. SNOW LOAD PARAMETERS (ASCE 7-10)
   - GROUND SNOW LOAD, $P_G$ . . . . . 10 PSF
   - UNIFORM ROOF DESIGN SNOW LOAD $P_F$ . . . . . 7 PSF
   - SNOW EXPOSURE FACTOR $C_E$ . . . . . 1.0
   - SNOW LOAD IMPORTANCE FACTOR, I . . . . . 1.0
   - THERMAL FACTOR $C_T$ . . . . . 1.0
7. SEISMIC LOADS (ASCE 07-10)
   - RISK CATEGORY . . . . . II
   - SITE CLASS . . . . . D
   - SPECTRAL RESPONSE ACCELERATION COEFFICIENTS . . . . . $S_S$ = 0.577 / $S_1$ = 0.219 (5% DAMPING, SITE CLASS B) $S_{DS}$ = 0.575 / $S_{D1}$ = 0.287
   - SEISMIC DESIGN CATEGORY . . . . . D
   - IMPORTANCE FACTOR $I_E$ . . . . . 1.0
   - ANALYSIS PROCEDURE . . . . . EQUIVALENT LATERAL FORCE PROCEDURE
   - SEISMIC RESISTING SYSTEM . . . . . SPECIAL REINFORCED MASONRY SHEAR WALLS; R=5, Ω=2½, $C_d$=3½

## GENERAL INFORMATION

1. PRIOR TO FABRICATION AND/OR ERECTION OF ANY MATERIALS, FIELD VERIFY ALL PERTINENT EXISTING DIMENSIONS, ELEVATIONS, AND CONDITIONS AND REPORT ANY DISCREPANCIES TO THE ENGINEER.
2. UNLESS OTHERWISE NOTED OR DETAILED, CONCRETE PADS FOR MECHANICAL EQUIPMENT SHALL BE 4" THICK (MINIMUM) AND REINFORCED WITH #3 @ 12" OC EACH WAY CENTERED.
3. SUBSTITUTION OF EXPANSION ANCHORS FOR EMBEDDED ANCHORS SHALL NOT BE PERMITTED.
4. PERMANENT STABILITY OF THE BUILDING AND COMPONENTS IS NOT PROVIDED UNTIL THE ERECTION IS COMPLETED AS SHOWN ON THE CONTRACT DRAWINGS. PER SECT 7.10.4 OF AISC CODE OF STANDARD PRACTICE FOR BUILDINGS AND BRIDGES AUGUST 25, 2010 "TEMPORARY SUPPORTS, SUCH AS TEMPORARY GUYS, BRACES, FALSEWORK, CRIBBING OR OTHER ELEMENTS REQUIRED FOR THE ERECTION OPERATION WILL BE DETERMINED, FURNISHED AND INSTALLED BY THE ERECTOR."
5. WEIGHTS OF MECHANICAL EQUIPMENT SHOWN ARE FOR UNITS SPECIFIED BY THE MECHANICAL ENGINEER. VERIFY WEIGHTS AND ANY SUBSTITUTIONS THAT RESULT IN INCREASED WEIGHT MUST BE APPROVED BY THE ENGINEER.
6. ENSURE THAT NO CONSTRUCTION LOAD EXCEEDS THE DESIGN LIVE LOADS INDICATED ON THE STRUCTURAL DRAWINGS AND THAT THESE LOADS ARE NOT PUT ON THE STRUCTURAL MEMBERS PRIOR TO THE TIME THAT ALL FRAMING MEMBERS AND THEIR CONNECTIONS ARE IN PLACE.
7. VERIFY THE SIZE AND LOCATION OF EQUIPMENT PADS AND PENETRATIONS THROUGH THE STRUCTURE FOR MECHANICAL, ELECTRICAL, AND PLUMBING WORK. OPENINGS AND PENETRATIONS NOT SPECIFICALLY SHOWN ON THE STRUCTURAL DRAWINGS SHALL BE SUBJECT TO APPROVAL BY THE ENGINEER.
8. REFER TO ARCHITECTURAL DRAWINGS FOR ADDITIONAL INFORMATION TO BE COORDINATED WITH THE STRUCTURAL DRAWINGS.
9. EXPANSION JOINT FILLER SHALL BE NON-EXTRUDING PREMOLDED MATERIAL COMPOSED OF FIBERBOARD IMPREGNATED WITH ASPHALT CONFORMING TO THE REQUIREMENTS OF ASTM D1751 UNLESS NOTED OTHERWISE.

## FOUNDATIONS/GEOTECHNICAL

1. FOUNDATION DESIGN IS BASED ON THE SOIL INVESTIGATION BY THE ARKANSAS HIGHWAY AND TRANSPORTATION DEPARTMENT PERFORMED ON MARCH 24TH, 2015 AND THE FOUNDATION RECOMMENDATIONS CONTAINED IN THE REPORT BY GRUBBS, BARTON, HOSKYN AND WYATT (GRUBBS JOB # 15-096A) DATED JUNE 26TH, 2015.
2. FOOTINGS SHALL BE FOUNDED A MINIMUM OF 1.5 FEET BELOW LOWEST ADJACENT GRADE. CONTINUOUS FOOTINGS ARE DESIGNED BASED ON 2000PSF ALLOWABLE BEARING CAPACITY. INDIVIDUAL FOOTINGS ARE DESIGNED UPON 2500PSF ALLOWABLE BEARING CAPACITY.
3. BUILDING PAD PREPARATION
   - MASS UNDERCUT SITE TO A DEPTH OF 2 FEET BELOW THE FOOTING BEARING ELEVATION (APPROXIMATELY 4 FOOT BELOW EXISTING GRADES). THE MASS UNDERCUT SHALL EXTEND AT LEAST 8 FEET OUTSIDE THE BUILDING LIMITS TO THE EXTENT POSSIBLE.
   - AFTER STRIPPING AND GRADING, BUT PRIOR TO PLACING ANY FILL, THE SUBGRADE SHOULD BE PROOF ROLLED WITH A PNEUMATIC-TIRED ROLLER, LOADED TANDEM DUMP TRUCK, OR OTHER SIMILAR EQUIPMENT.
   - SOFT AND/OR LOOSE ZONES SHOULD BE UNDERCUT AND BE REPROCESSED AND RE-COMPACTED OR REPLACED WITH SELECT FILL.
   - ON-SITE SOILS ARE NOT SUITABLE FOR USE AS FILL OR BACKFILL IN THE BUILDING AREAS. IMPORTED BORROW OR FILL OR BACKFILL SHOULD CONSIST OF LOW-PLASTICITY CLAYEY SAND (SC), SANDY CLAY (CL), OR CLAYEY GRAVEL (GC) WITH A LIQUID LIMIT LESS THAN 45 AND A PLASTICITY INDEX (PI) OF 5 TO 18. FILL AND BACKFILL IN THE BUILDING AREAS SHOULD BE COMPACTED TO A MINIMUM OF 98% OF THE STANDARD PROCTOR (AASHTO T 99) MAXIMUM DRY DENSITY WITHIN A WATER CONTENT RANGE OF MINUS 1 TO PLUS 3 PERCENT OF THE OPTIMUM VALUE. FILL AND BACKFILL SHOULD BE PLACED IN NOMINAL 6 TO 8 INCH THICK LOOSE LIFTS. EACH LIFT OF FILL AND BACKFILL SHOULD BE PROPERLY COMPACTED, TESTED AND APPROVED PRIOR TO PLACING SUBSEQUENT LIFTS.

## CAST-IN-PLACE CONCRETE

1. UNLESS OTHERWISE NOTED, UNDER ALL INTERIOR FLOOR SLABS-ON-GRADE, PLACE A MINIMUM 10 MIL VAPOR RETARDER ON TOP OF 6" OF COMPACTED CLEAN, CRUSHED STONE DENSIFIED WITH VIBRATING EQUIPMENT PRIOR TO FLOOR SLAB CONSTRUCTION. THE SUBGRADE SOIL DIRECTLY BELOW THE STONE BASE COURSE SHALL BE PREPARED AS SPECIFIED IN THE FOUNDATIONS/GEOTECHNICAL NOTES, THIS SHEET.
2. PROVIDE SUITABLE WIRE SPACERS, CHAIRS, TIES, ETC. FOR SUPPORTING REINFORCING STEEL IN THE PROPER POSITION WHILE PLACING CONCRETE.
3. REINFORCING SHALL CONFORM TO THE REQUIREMENTS OF ASTM A615, GRADE 60.
4. FABRICATION OF REINFORCING STEEL SHALL BE IN ACCORDANCE WITH THE DETAILS OF ACI 315-04, "DETAILING OF CONCRETE REINFORCEMENT".
5. UNLESS OTHERWISE NOTED, LAP SPLICES OR EMBEDMENT LENGTHS SHALL CONFORM TO THE FOLLOWING TABLE:

| LAP LENGTHS FOR SPLICES * | | |
|---|---|---|
| BAR SIZE | TOP BARS** | OTHER |
| #3 | 2'-5" | 1'-11" |
| #4 | 3'-3" | 2'-6" |
| #5 | 4'-1" | 3'-1" |
| #6 | 4'-10" | 3'-9" |
| #7 | 8'-10" | 6'-9" |
| #8 | 10'-1" | 7'-9" |
| #9 | 11'-4" | 8'-9" |

*BASED ON MINIMUM CONCRETE COVER OF 1½". AGGREGATE SIZE 1" MAX
**TOP BARS ARE HORIZONTAL BARS WITH MORE THAN TWELVE (12) INCHES OF CONCRETE CAST BELOW BARS.

6. FLOOR SLAB-ON-GRADE TOP MAT REINFORCING SHALL BE LOCATED 1 ½" CLEAR FROM TOP OF SLABS & 3" CLEAR FROM BOTTOM OF THE SLAB FOR A BOTTOM MAT IF APPLICABLE UNLESS NOTED OTHERWISE. IF ONLY ONE MAT OF STEEL IS REQUIRED THEN IT SHALL BE CONSIDERED A TOP MAT.
7. UNLESS NOTED OTHERWISE, PROVIDE CONCRETE COVER AS NOTED IN THE FOLLOWING TABLE:

| CONCRETE COVER FOR CAST-IN-PLACE NON-PRESTRESSED CONCRETE FOR BUILDINGS | | | | | |
|---|---|---|---|---|---|
| DESCRIPTION | | SINGLE LAYER | TWO LAYERS | | REMARKS |
| | | | TOP | BOT | * IF CAST ON EARTH |
| SLABS | ON GRADE | CENTER | 1½" | 3" * | ** 2" FOR #6 & LARGER WHEN EXPOSED TO WEATHER |
| DESCRIPTION | | SIDE | TOP | BOT | |
| BEAMS | SLAB TURNDOWN | 2" ** | 1½" ** | 3" * | |
| OTHER | SPOT FOOTINGS | 3" * | 2" | 3" * | |
| | COLUMNS & PLINTHS | 1½" ** | - | - | |

NOTE:
UNLESS OTHERWISE NOTED ON DRAWINGS, CONCRETE COVER OVER PRIMARY REINFORCEMENT, TIES, STIRRUPS AND SPIRALS SHALL COMPLY WITH LISTED VALUES. COVER SHALL COMPLY WITH REQUIREMENTS OF ACI 318 FOR ELEMENTS NOT DESCRIBED.

### MAINTENANCE BUILDING WIND LOADS TABLE

| MARK | AREA | SURFACE PRESSURE (PSF) 10 SF | 50 SF | 100 SF |
|---|---|---|---|---|
| 1 | NEGATIVE ZONE 1 | -26.4 | -24.7 | -23.9 |
| 2 | NEGATIVE ZONE 2 | -45.9 | -37.4 | -33.7 |
| 3 | NEGATIVE ZONE 3 | -67.9 | -57.7 | -53.3 |
| 2A | ZONE 2 OVERHANG | -53.7 | -53.7 | -53.7 |
| 3A | ZONE 3 OVERHANG | -90.4 | -69.9 | -61.1 |
| | POSITIVE ALL ZONES | 16.6 | 16.6 | 16.6 |

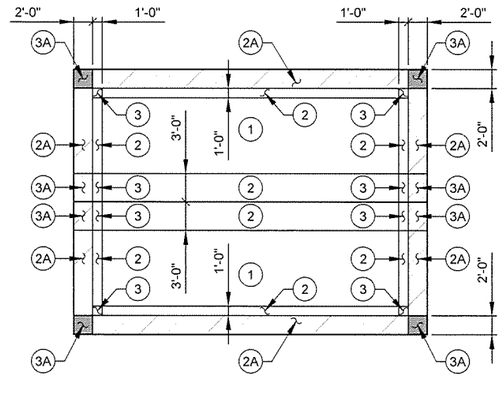


MAINTENANCE BUILDING
WIND UPLIFT DIAGRAM (ROOF)

### TRUCKER-VENDING BUILDING WIND LOADS TABLE

| MARK | AREA | SURFACE PRESSURE (PSF) 10 SF | 50 SF | 100 SF |
|---|---|---|---|---|
| 1 | NEGATIVE ZONE 1 | -26.4 | -24.7 | -23.9 |
| 2 | NEGATIVE ZONE 2 | -45.9 | -37.4 | -33.7 |
| 3 | NEGATIVE ZONE 3 | -67.9 | -57.7 | -53.3 |
| 2A | ZONE 2 OVERHANG | -53.7 | -53.7 | -53.7 |
| 3A | ZONE 3 OVERHANG | -90.4 | -69.9 | -61.1 |
| | POSITIVE ALL ZONES | 16.6 | 16.6 | 16.6 |

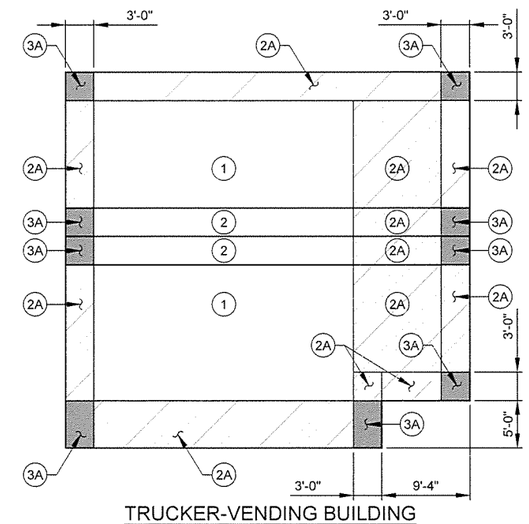


TRUCKER-VENDING BUILDING
WIND UPLIFT DIAGRAM (ROOF)


GARVER
4701 Northshore Drive
N Little Rock, AR 72118
501-376-3533
www.GarverUSA.com


CERTIFICATE OF AUTHORIZATION
GARVER LLC
No. 766
ARKANSAS ENGINEER

STATE OF ARKANSAS
LICENSED PROFESSIONAL ENGINEER
No. 15642
DAVID TAYLOR CLEMENT
9/30/15

| IFC Symbol | ISSUED FOR CONSTRUCTION Description | 10/1/15 Date | JRR Appr. |
|---|---|---|---|

| | |
|---|---|
| Job Number | 060451 |
| Submitted by | John T. Vollmer III, PE, SE, Director, Federal Services |
| Plot Scale | 1:1 |
| Plot Date | 9/30/15 |
| Drwg Code | - |
| Designed by | D. CLEMENT |
| Drawn by | S. BOWEN |
| Checked by | G. ARCHER |
| File Name | AH15VR-S-001.DWG |

ARKANSAS HIGHWAY AND TRANSPORTATION DEPARTMENT
ARKANSAS TOURIST INFORMATION CENTER
(WHITE RIVER) (S)
JOB 061451

GENERAL NOTES

Sheet Reference Number:
S-001

## MASONRY

1. CONCRETE MASONRY UNITS SHALL CONFORM TO ASTM C90 FOR LOAD-BEARING CONCRETE MASONRY UNITS.
2. THE NET AREA COMPRESSIVE STRENGTH OF MASONRY, $f'_m$, SHALL BE A MINIMUM OF 1,500 PSI AND THE MINIMUM NET AREA COMPRESSIVE STRENGTH OF CONCRETE MASONRY UNITS SHALL BE 2,800 PSI.
3. MORTAR SHALL BE TYPE "S" WITH A MINIMUM COMPRESSIVE STRENGTH OF 1,800 PSI AT 28-DAYS. MORTAR SHALL CONFORM TO ASTM C270 AND SHALL CONFORM TO ARTICLES 2.1A AND 2.6A OF TMS 602/ ACI 530.1 / ASCE6 (ALL LATEST EDITIONS).
4. ALL GROUT FOR MASONRY CONSTRUCTION SHALL CONFORM TO ASTM C476 OR ARTICLE 2.2 OF TMS 602 / ACI 530.1 / ASCE6 (ALL LATEST EDITIONS). PROVIDE FINE GROUT WITH A MINIMUM COMPRESSIVE STRENGTH OF 2,000 PSI AT 28-DAYS. GROUT SHALL BE PLACED IN MAXIMUM LIFTS OF 4'-0".
5. VERTICAL CELLS TO RECEIVE GROUT SHALL HAVE VERTICAL ALIGNMENT SUFFICIENT TO MAINTAIN A CONTINUOUS UNOBSTRUCTED VERTICAL CELL NOT LESS THAN 2"x3" IN PLAN DIMENSION.
6. VERTICAL REINFORCEMENT SHALL BE AS NOTED ON DRAWINGS. PLACE VERTICAL REINFORCING BARS AT CORNERS, JAMBS OF OPENINGS BELOW BEAM BEARING, AND IN WALLS AS INDICATED ON THE DRAWINGS. VERTICAL WALL REINFORCING BARS SHALL EXTEND CONTINUOUS FROM FOUNDATION TO EMBED AT LEAST 6" INTO TOP BOND BEAM. PROVIDE VERTICAL REINFORCEMENT IN LAST TWO CELLS AT EACH END OF WALL.
7. DOWEL VERTICAL REINFORCING BARS OUT OF THE FOUNDATION OR STRUCTURE BELOW WITH BARS OF THE SAME SIZE AND SPACING ABOVE. DOWELS SHALL EXTEND A MINIMUM OF 40 DIAMETERS INTO THE MASONRY WALL. THERE SHALL BE A FOUNDATION DOWEL FOR EACH VERTICAL REINFORCING BAR. PROVIDE A STANDARD 90° HOOK ON THE ENDS OF THE FOUNDATION DOWELS EMBEDDED IN THE FOUNDATION UNLESS NOTED OTHERWISE.
8. HORIZONTAL JOINT REINFORCING SHALL BE W1.7 LADDER-TYPE HORIZONTAL JOINT REINFORCEMENT AT 16" OC.
9. VERTICAL REINFORCING BARS SHALL BE CENTERED IN CELLS THROUGHOUT THE HEIGHT OF THE WALL UNLESS NOTED OTHERWISE. PROVIDE REBAR POSITIONERS AS REQUIRED TO MAINTAIN VERTICAL ALIGNMENT.
10. LAPS OR SPLICES OF REINFORCING STEEL IN MASONRY SHALL BE THE GREATER OF 24" OR 40 BAR DIAMETERS.
11. PLACE HORIZONTAL BARS IN 8" DEEP BOND BEAM UNITS AT TOPS OF ALL WALLS AND WHERE INDICATED. PROVIDE (2) #4 MINIMUM HORIZONTAL BARS.
12. CONTINUE BOND BEAM UNITS AND REINFORCING BARS UNINTERRUPTED AROUND CORNERS AND ACROSS WALL INTERSECTIONS. SEE TYPICAL MASONRY DETAILS FOR ADDITIONAL INFORMATION.
13. SUBSTITUTION OF BRICKS OR SOLID MASONRY UNITS INTO CMU WALLS AS SPACERS AND/OR SLOPING BOND BEAMS SHALL NOT BE PERMITTED.
14. PRIOR TO START OF LAYING MASONRY, THE CONTACT SURFACE OF ALL FOUNDATIONS AND FLOORS WHICH ARE TO RECEIVE MASONRY WORK SHALL BE ROUGHENED AND CLEANED.
15. NO TEMPORARY OPENINGS OR PASSAGES OF ANY KIND SHALL BE ALLOWED IN ANY CMU WALL. CLEANOUTS ARE REQUIRED FOR POUR HEIGHTS GREATER THAN 5'-0".
16. SUBMIT SHOP DRAWINGS FOR REVIEW BY THE ENGINEER SHOWING: ALL VERTICAL AND HORIZONTAL REINFORCING LOCATIONS AND SPLICE METHODS; LOCATIONS OF BOND BEAMS AND LINTELS; LOCATIONS OF ALL CORES TO BE FILLED WITH GROUT; LOCATIONS OF CONTROL JOINTS; AND LOCATIONS OF ALL EMBEDDED PLATES AND ANCHORS.
17. PROVIDE TEMPORARY BRACING FOR ALL MASONRY WALLS CONFORMING TO OSHA REQUIREMENTS UNTIL PERMANENT LATERAL SUPPORT IS COMPLETE.
18. THE CONTRACTOR SHALL NOT PLACE LOADS ON BOND BEAMS OR MASONRY CELLS FILLED WITH GROUT UNTIL THE GROUT HAS CURED FOR A MINIMUM OF 3 DAYS.
19. GROUT CMU COURSE AT FLOOR LEVEL SOLID.
20. GROUT CMU BELOW GRADE SOLID OR AS INDICATED.

## STRUCTURAL STEEL

1. FABRICATION AND ERECTION OF STRUCTURAL STEEL SHALL BE IN ACCORDANCE WITH AISC SPECIFICATIONS, LATEST EDITION.
2. BEAM CONNECTIONS SHALL BE DETAILED AS SHOWN ON THE CONTRACT DRAWINGS.
3. UNLESS DETAILED OTHERWISE, ALL SHOP CONNECTIONS SHALL BE WELDED.
4. UNLESS DETAILED OTHERWISE, ALL FIELD CONNECTIONS SHALL BE MADE USING ¾"Ø AND 1"Ø WHERE INDICATED ASTM A325-N HIGH STRENGTH BOLTS ('N' INDICATES BEARING TYPE WITH THREADS INCLUDED IN SHEAR PLANE). WASHERS SHALL BE INSTALLED UNDER NUTS OF FASTENERS WHEN REQUIRED BY THE SPECIFICATIONS OF STRUCTURAL JOINTS.
5. WHERE FIELD AND SHOP WELDS ARE INDICATED ON THE DRAWINGS, THEY SHALL BE THE SIZE AND TYPE NOTED. ALL WELDING OF STRUCTURAL STEEL SHALL BE DONE IN ACCORDANCE WITH THE LATEST EDITION OF AWS D1.1 AND ALL WELDS INCLUDING FIELD WELDS SHALL BE MADE BY CERTIFIED WELDERS USING E70XX ELECTRODES.
6. HIGH STRENGTH BOLTS (¾"Ø AND 1"Ø - A325) SHALL BE TIGHTENED BY ONE OF THE FOLLOWING METHODS: POWER WRENCHES ADJUSTED TO STALL OR CUT-OUT AT THE CORRECT TENSION, MANUAL TORQUE WRENCHES WITH TORQUE INDICATION SET TO GIVE THE CORRECT TENSION, OR MANUAL WRENCHES USING THE "TURN-OF-THE-NUT" METHOD OF ASSURING THE CORRECT BOLT TENSION. EACH BOLT SHALL BE TIGHTENED TO PROVIDE, WHEN ALL BOLTS IN THE JOINT ARE TIGHT, A MINIMUM BOLT TENSION OF 28,000 LBS FOR ¾"Ø BOLTS AND 35,000 LBS FOR 1"Ø BOLTS.
7. STEEL ERECTOR SHALL PROVIDE THE NECESSARY BRACING DURING ERECTION AND UNTIL ALL STEEL IS PLUMB AND SECURE.

## ABBREVIATIONS

| | | | | | | | |
|---|---|---|---|---|---|---|---|
| AB | ANCHOR BOLT(S) | EXP | EXPANSION, EXPOSED | MFG | MANUFACTURING | SK | SHEAR KEY |
| ADDL | ADDITIONAL | EXT | EXTERIOR | MFR | MANUFACTURER | SP | SPACE(S), SOUTHERN PINE |
| AFF | ABOVE FINISHED FLOOR | F/ | FACE OF | MIN | MINIMUM | SPEC | SPECIFICATIONS |
| ALT | ALTERNATE | FD | FLOOR DRAIN | MISC | MISCELLANEOUS | SQ | SQUARE |
| ARCH | ARCHITECT(URAL) | FDTN | FOUNDATION | MTL | METAL | SS | STANDING SEAM (ROOF) |
| BLDG | BUILDING | FIN | FINISH(ED), FINAL | N/A | NOT APPLICABLE | SSL | SHORT SLOTTED HOLE |
| BLK | BLOCK | FIN FLR | FINISH FLOOR | NIC | NOT-IN-CONTRACT | SST | STAINLESS STEEL |
| BLKG | BLOCKING | FLR | FLOOR | NOM | NOMINAL | STD | STANDARD |
| BM | BEAM, BENCHMARK | FS | FAR SIDE, FOOTING STEP, FULL SIZE | NS | NEAR SIDE | STF | STIFFENER |
| BOT | BOTTOM | FT | FEET, FOOT | NSG | NON-SHRINK GROUT | STL | STEEL |
| BS | BOTH SIDES | FTG | FOOTING(S) | NTS | NOT-TO-SCALE | STRUCT | STRUCTURAL |
| BTWN | BETWEEN | GA | GAUGE, GAGE | OC | ON-CENTER | SYMM | SYMMETRICAL |
| BW | BOTH WAYS | GALV | GALVANIZED | OD | OUTSIDE DIAMETER, OUTSIDE | T&B | TOP AND BOTTOM |
| CCJ | CRACK CONTROL JOINT | GR | GRADE | | DIMENSION | T&G | TONGUE AND GROOVE |
| CIP | CAST-IN-PLACE | GRTG | GRATING | OH | OVERHEAD | TCX | TOP CHORD EXTENSION |
| CJ | CONTROL, CONTRACTION, OR | GYP | GYPSUM | OPH | OPPOSITE-HAND | TEMP | TEMPORARY |
| | CONSTRUCTION JOINT | GYP BD | GYPSUM BOARD | OPNG | OPENING(S) | THK | THICK(NESS) |
| CJP | COMPLETE JOINT PENETRATION | HD | HEAVY-DUTY | OPP | OPPOSITE | THRD | THREAD(ED) |
| CL | CENTERLINE | HDR | HEADER | PCC | PRECAST, PRECAST CONCRETE | THRU | THROUGH |
| CLR | CLEAR(ANCE) | HORIZ | HORIZONTAL(LY) | PCF | POUNDS PER CUBIC FOOT | TM | TOP-OF-MASONRY ELEVATION |
| CMU | CONCRETE MASONRY UNIT(S) | HS | HEADED STUD(S) | PED | PEDESTAL | TOB | TOP-OF-BEAM ELEVATION |
| COL | COLUMN(S) | HSS | HOLLOW STEEL SECTION | PJP | PARTIAL JOINT PENETRATION | TOC | TOP-OF-CONCRETE ELEVATION |
| CONC | CONCRETE | HT | HEIGHT | PL | PLATE(S) | TOF | TOP-OF-FOOTING ELEVATION |
| CONN | CONNECT, CONNECTION(S) | INT | INTERIOR | PLBG | PLUMBING | TOS | TOP-OF-STEEL ELEVATION |
| CONT | CONTINUE, CONTINUOUS | JBE | JOIST BEARING ELEVATION | PLF | POUNDS PER LINEAR FOOT | TP | TOP-OF-PARAPET ELEVATION |
| CTR | CENTER | JST | JOIST(S) | PLYWD | PLYWOOD | TRANS | TRANSVERSE, TRANSOM |
| CTRD | CENTERED | JT | JOINT | PNL | PANEL | TW | TOP-OF-WALL ELEVATION |
| DIA | DIAMETER | KOBB | KNOCK-OUT BOND BEAM | PROJ | PROJECT(ION) | TYP | TYPICAL |
| DIAG | DIAGONAL | LB | POUND(S), LAG BOLT(S) | PSF | POUNDS PER SQUARE FOOT | UFC | UNIFORM FACILITIES CRITERIA |
| DIM | DIMENSION(S) | LDH | LONG DIMENSION HORIZONTAL | PSI | POUNDS PER SQUARE INCH | UL | UNDERWRITERS LABORATORY |
| DWG | DRAWING(S) | LDO | LONG DIMENSION OUTSTANDING | QTY | QUANTITY | UNO | UNLESS NOTED OTHERWISE |
| DWLS | DOWEL(S) | LDV | LONG DIMENSION VERTICAL | R | RADIUS, RANGE | VAR | VAPOR RETARDER |
| EA | EACH | LF | LINEAR FOOT(EET) | RD | ROOF DRAIN | VERT | VERTICAL, VERTICALLY |
| EBC | EXTENDED BOTTOM CHORD | LIN | LINEAR | REBAR | REINFORCING BAR | VPCT | VAULTED PARALLEL CHORD TRUSS |
| EF | EACH FACE | LL | LIVE LOAD | REINF | REINFORCE(D), (ING), (MENT) | W/ | WITH |
| EIFS | EXTERIOR INSULATED FINISH | LONG | LONGITUDINAL | REQD | REQUIRED | W/O | WITHOUT |
| | SYSTEM | LT | LIGHT | SCHED | SCHEDULE | WD | WOOD, WOOD DOOR |
| EJ | EXPANSION JOINT | LT WT | LIGHTWEIGHT | SECT | SECTION | WP | WATERPROOF(ING), |
| EQ | EQUAL | MAS | MASONRY | SF | SQUARE FOOT(EET) | | WEATHERPROOF, WORK POINT |
| EQUIP | EQUIPMENT | MATL | MATERIAL | SHT | SHEET | WS | WATERSTOP |
| ES | EQUISPACED | MAX | MAXIMUM | SIM | SIMILAR | WT | WEIGHT |
| EXIST | EXISTING | MECH | MECHANICAL | SJI | STEEL JOIST INSTITUTE | WWR | WELDED-WIRE-REINFORCING |

## COLD-FORMED METAL TRUSSES

1. ALL COLD-FORMED METAL ROOF TRUSSES ARE TO BE DESIGNED BY THE MANUFACTURER FOR ACTUAL ROOF DEAD LOAD (20 PSF MINIMUM) PLUS THE WEIGHTS OF INDIVIDUAL TRUSSES PLUS 20 PSF ROOF LIVE LOAD. WIND LOAD PER THE COMPONENTS AND CLADDING TABLE SHALL BE INCLUDED IN THE DESIGN. INCLUDE ACTUAL DEAD LOAD OF SUPPORTED MATERIALS AT BOTTOM CHORD PLUS A 5 PSF COLLATERAL DEAD LOAD AT BOTTOM CHORD. TOTAL DEFLECTION SHALL BE LIMITED TO L/240 FOR BOTH INDIVIDUAL MEMBERS AND TRUSSES. LIVE LOAD DEFLECTIONS SHALL BE LIMITED TO L/360. ALL COLD-FORMED METAL, SHALL BE 18 GAUGE MINIMUM. ALL COLD-FORMED METAL SHALL BE GALVANIZED.
2. EXACT TRUSS WEB AND CHORD SIZES (SEE ABOVE FOR MINIMUMS) AND LAYOUT ARE TO BE DETERMINED BY THE MANUFACTURER. TRUSS MANUFACTURER TO DESIGN AND FURNISH ANY PERMANENT TRUSS BRACING REQUIRED FOR STABILITY.
3. MANUFACTURER TO SUBMIT FOR APPROVAL DESIGN CALCULATIONS WITH SHOP DRAWINGS STAMPED BY PROFESSIONAL ENGINEER REGISTERED IN THE STATE OF ARKANSAS. SHOP DRAWINGS SHALL CLEARLY INDICATE MEMBER SIZES, GAUGE OF MATERIAL, MEMBER DESIGN FORCES, AND MEMBER END WELD SIZES AND LENGTHS.
4. TRUSSES AND THEIR CONNECTIONS SHALL BE DESIGNED TO BRACE THE MASONRY WALLS ON WHICH THEY BEAR. WALL OUT-OF-PLANE BRACE FORCE SHALL BE TAKEN AS 448# (STRENGTH LEVEL SEISMIC LOAD) AT THE TOP OF THE WALL FOR TRUSSES THAT BEAR ON WALLS 10 FEET OR LESS IN HEIGHT. THE WALL BRACE FORCE SHALL BE TAKEN AS 728# (STRENGTH LEVEL SEISMIC LOAD) AT THE TOP OF THE WALL FOR TRUSSES THAT BEAR ON WALLS GREATER THAN 10 FEET IN HEIGHT. LOADS INCLUDE 1.4 FACTOR FOR ALL STEEL WALL ANCHORAGE ELEMENTS IN SEISMIC DESIGN CATEGORIES C, D, & F.
5. TRUSSES SHALL BE DESIGNED FOR THE PRESSURES AS INDICATED ON THE WIND UPLIFT DIAGRAM AND SHALL BE ANCHORED ACCORDINGLY.

## STEEL FLOOR DECK

1. METAL FLOOR DECK SHALL BE 2" CONFORM DECK, 20 GAUGE (2C20) AS NOTED. MINIMUM DECK PROPERTIES SHALL BE AS FOLLOWS:
   - $I_P$ = 0.409 $IN^4$/FT
   - $I_N$ = 0.406 $IN^4$/FT
   - $S_P$ = 0.341 $IN^3$/FT
   - $S_N$ = 0.346 $IN^3$/FT
2. WHERE DECK BEARS ON CMU, ATTACH DECK TO BOND BEAM WITH 36/4 PATTERN USING 3/16"Ø MASONRY SCREWS. LONG PANEL SIDES AT SUPPORTS SHALL BE ATTACHED USING 3/16"Ø MASONRY SCREWS AT 8" OC.

## STEEL ROOF DECK

1. ROOF DECK SHALL BE WIDE RIB TYPE "B", 1½", 22 GAUGE, GALVANIZED STEEL DECK UNLESS NOTED OTHERWISE ON THE PLANS.
2. THE DECK SHALL BE FASTENED TO SUPPORTING STEEL IN ACCORDANCE WITH THE MANUFACTURER'S INSTRUCTIONS. MINIMUM DECK FASTENING SHALL BE AS FOLLOWS: SUPPORT FASTENERS SHALL BE #12 TEK SCREWS IN A 36/4 PATTERN WITH (2) #10 TEK SCREWS PER SIDELAP SPAN AS SIDELAP FASTENERS. LONG PANEL SIDES AT SUPPORT ANGLES AND PLATES SHALL BE FASTENED WITH #12 SCREWS AT 8" OC ALONG FULL LENGTH OF PANEL.
3. ROOF DECK SHALL BE CONTINUOUS OVER AT LEAST THREE SUPPORTS.


GARVER
4701 Northshore Drive
N Little Rock, AR 72118
501-376-3633
www.GarverUSA.com


CERTIFICATE OF AUTHORIZATION
GARVER LLC
No. 766
ARKANSAS ENGINEERS

STATE OF ARKANSAS
LICENSED PROFESSIONAL ENGINEER
No. 15642
DAVID TAYLOR CLEMENT
9/30/15

| Symbol | Description | Date | Appr. |
|---|---|---|---|
| IFC | ISSUED FOR CONSTRUCTION | 10/1/15 | JRR |

Designed by D. CLEMENT
Drawn by S. BOWEN
Checked by G. ARCHER
Submitted by John T. Williams, II, P.E., SE Jacksonville, Arkansas
Plot Date 9/30/15
Plot Scale 1:1
Dwg Code -
File Name AH15WR-S-002.DWG
Job Number 060451
N/A
N/A
N/A

ARKANSAS HIGHWAY AND TRANSPORTATION DEPARTMENT
ARKANSAS TOURIST INFORMATION CENTER
(WHITE RIVER) (S)
JOB 061451

GENERAL NOTES

Sheet Reference Number:
S-002

| TOURIST INFORMATION CENTER WIND LOADS TABLE | | | | |
|---|---|---|---|---|
| | | SURFACE PRESSURE (PSF) | | |
| MARK | AREA | 10 SF | 50 SF | 100 SF |
| 1 | NEGATIVE ZONE 1 | -27.4 | -25.6 | -24.9 |
| 2 | NEGATIVE ZONE 2 | -47.7 | -38.9 | -35.0 |
| 3 | NEGATIVE ZONE 3 | -70.6 | -59.9 | -55.3 |
| 2A | ZONE 2 OVERHANG | -55.8 | -55.8 | -55.8 |
| 3A | ZONE 3 OVERHANG | -93.9 | -72.6 | -63.5 |
| | POSITIVE ALL ZONES | 17.3 | 16.0 | 16.0 |

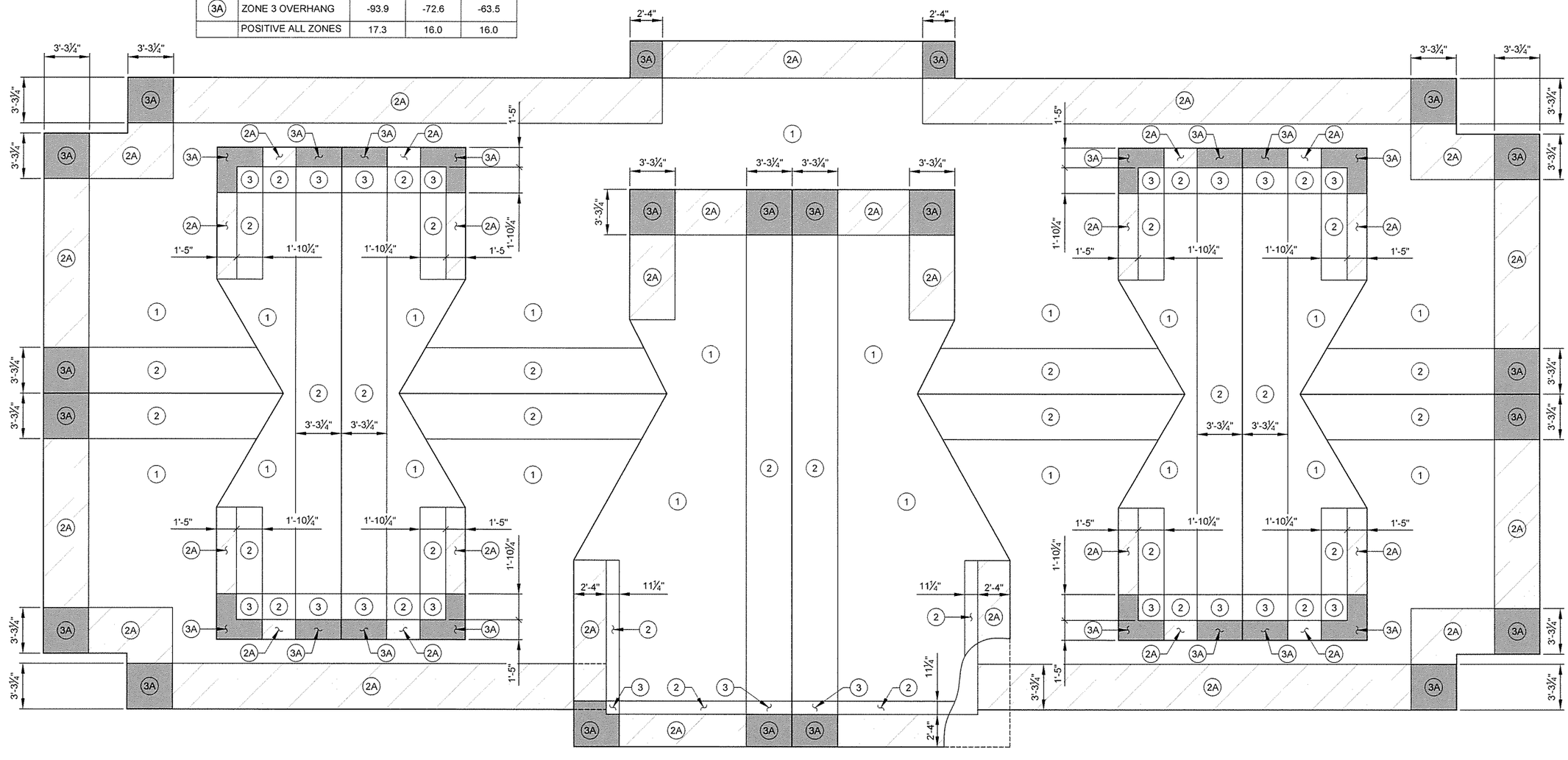


PROJECT NORTH

1 / S-003

## WIND UPLIFT DIAGRAM (ROOF)

SCALE: NONE


GARVER
4701 Northshore Drive
N Little Rock, AR 72118
501-376-3553
www.GarverUSA.com


CERTIFICATE OF AUTHORIZATION ARKANSAS ENGINEER GARVER LLC No. 766

STATE OF ARKANSAS LICENSED PROFESSIONAL ENGINEER No. 15642 DAVID TAYLOR CLEMENT

9/30/15

| Symbol | Description | Date | Appr. |
|---|---|---|---|
| IFC | ISSUED FOR CONSTRUCTION | 10/1/15 | JRR |

Job Number 050451

Submitted by: John T. Wilkins, III, PE, SE, Director, Facilities Services

Plot Date: 9/30/15 | Plot Scale: 1:1

Designed by: D. CLEMENT | Drawn by: S. BOWEN | Checked by: G. ARCHER | Dwg Code: - | File Name: AH15VR-S-003.DWG

ARKANSAS HIGHWAY AND TRANSPORTATION DEPARTMENT
ARKANSAS TOURIST INFORMATION CENTER
(WHITE RIVER) (S)
JOB 061451

TOURIST INFORMATION CENTER
WIND UPLIFT DIAGRAM (ROOF)

Sheet Reference Number:

S-003

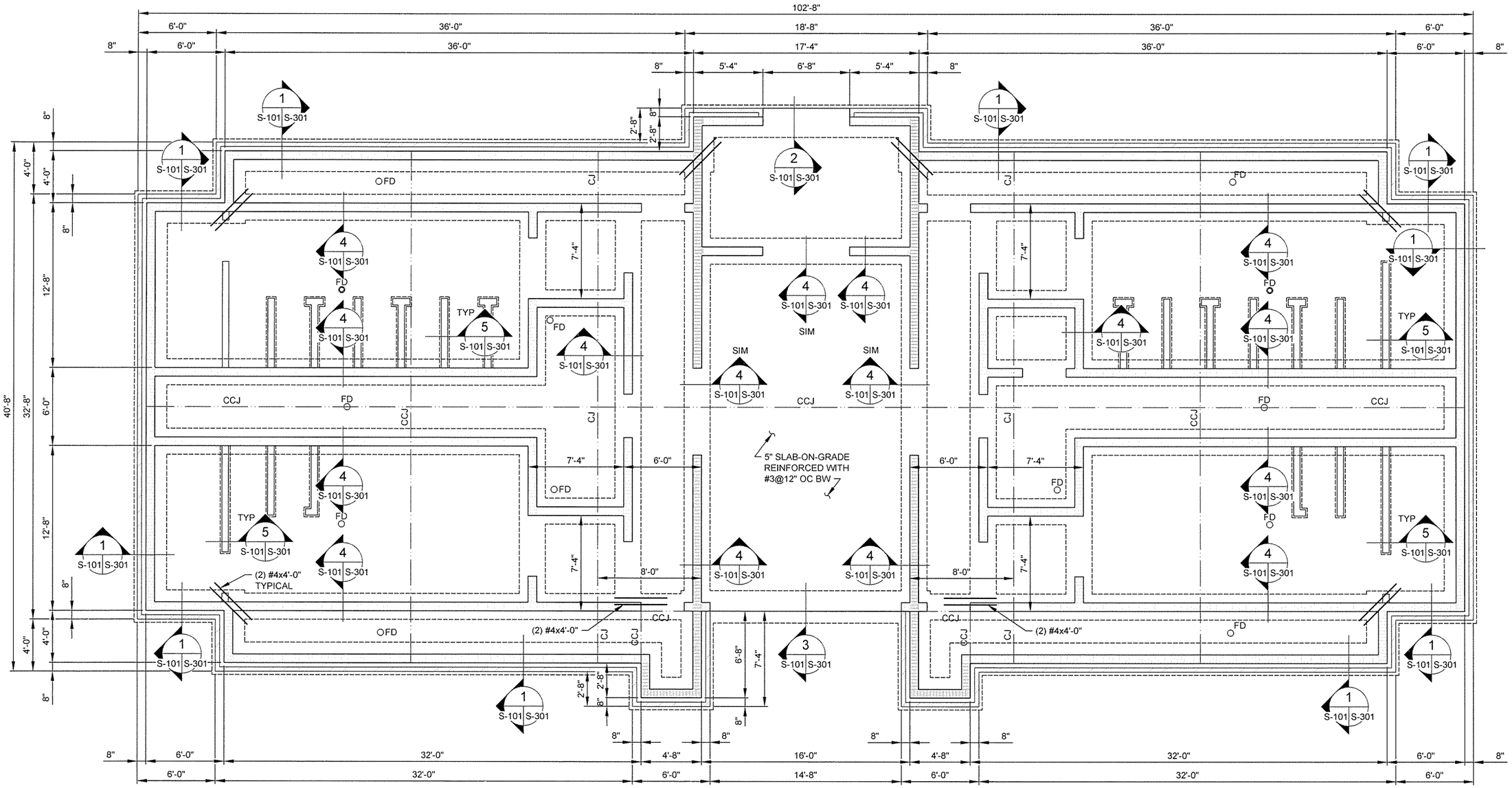


## CMU WALL REINFORCING LEGEND

- 8" CMU WALL REINFORCED WITH #4@48" OC VERT AND HORIZ BOND BEAMS AT 48" OC REINFORCED WITH (2) #4.
- 8" CMU WALL REINFORCED WITH #4@24" OC VERT AND HORIZ BOND BEAMS AT 48" OC REINFORCED WITH (2) #4.
- 6" CMU WALL REINFORCED WITH #4@24" OC VERT. (GROUT ALL CELLS SOLID FULL HEIGHT)

NOTE:
SEE ARCHITECTURAL FOR WALL CONSTRUCTION JOINT LOCATIONS.

PROJECT NORTH

1 / S-101 FOUNDATION PLAN

SCALE: 1/4" = 1'-0"

0 2' 4' 8' 12'
SCALE: 1/4" = 1'-0"


GARVER
4701 Northshore Drive
N Little Rock, AR 72118
501-376-3633
www.GarverUSA.com


CERTIFICATE OF AUTHORIZATION
GARVER LLC
No. 766
ARKANSAS-ENGINEER

STATE OF ARKANSAS
LICENSED PROFESSIONAL ENGINEER
No. 15642
DAVID TAYLOR CLEMENT
9/30/15

| IFC Symbol | ISSUED FOR CONSTRUCTION Description | 10/1/15 Date | JRR Appr |
|---|---|---|---|

Job Number 060451
Submitted by: John T. Watkins, III, PE, SE Director, Federal Services
Plot Date: 9/30/15
Plot Scale: 1:1
Designed by: D. CLEMENT
Drawn by: S. BOWEN
Checked by: G. ARCHER
Drwg Code: -
File Name: AH15WR-S-101.DWG

ARKANSAS HIGHWAY AND TRANSPORTATION DEPARTMENT
ARKANSAS TOURIST INFORMATION CENTER
(WHITE RIVER) (S)
JOB 061451

TOURIST INFORMATION CENTER
FOUNDATION PLAN

Sheet Reference Number:
S-101

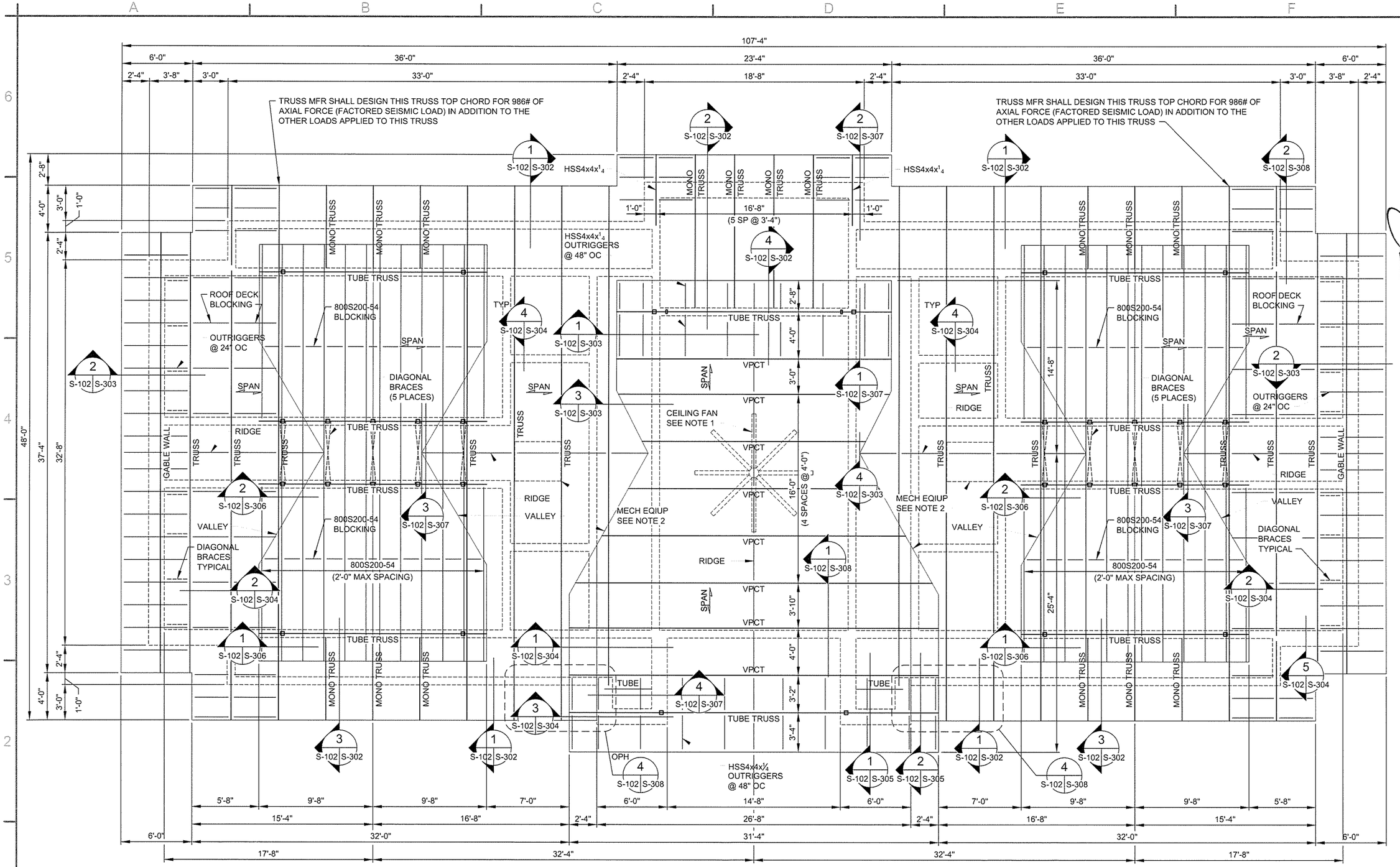


NOTES:
1. TRUSS MFR SHALL COORDINATE ATTACHMENT AND SUPPORT OF CEILING FAN WITH CEILING FAN SUPPLIER.
2. TRUSS MFR SHALL COORDINATE WITH MECHANICAL SUPPLIER FOR SUPPORT OF 300# MECHANICAL UNITS.

PROJECT NORTH

1 / S-102 ROOF FRAMING PLAN

SCALE: ¼" = 1'-0"

SCALE: ¼" = 1'-0"

GARVER
4701 Northshore Drive
N Little Rock, AR 72118
501-376-3633
www.GarverUSA.com

CERTIFICATE OF AUTHORIZATION ARKANSAS ENGINEER GARVER LLC No. 766

STATE OF ARKANSAS LICENSED PROFESSIONAL ENGINEER DAVID TAYLOR CLEMENT No. 15642

10/1/15

| Symbol | Description | Date | Appr. |
|---|---|---|---|
| IFC | ISSUED FOR CONSTRUCTION | 10/1/15 | JRR |

Job Number 060451
Submitted by: John T. Williams, Proj. Mgr. SE; Dave Fox, Project Engineer
Designed by: D. CLEMENT
Drawn by: S. BOWEN
Checked by: G. ARCHER
Plot Date: 10/1/15
Plot Scale: 1:2
Dwg Code: -
File Name: AH15WR-S-102.DWG
N/A

ARKANSAS HIGHWAY AND TRANSPORTATION DEPARTMENT
ARKANSAS TOURIST INFORMATION CENTER
(WHITE RIVER) (S)
JOB 061451

TOURIST INFORMATION CENTER
ROOF FRAMING PLAN

Sheet Reference Number:
S-102

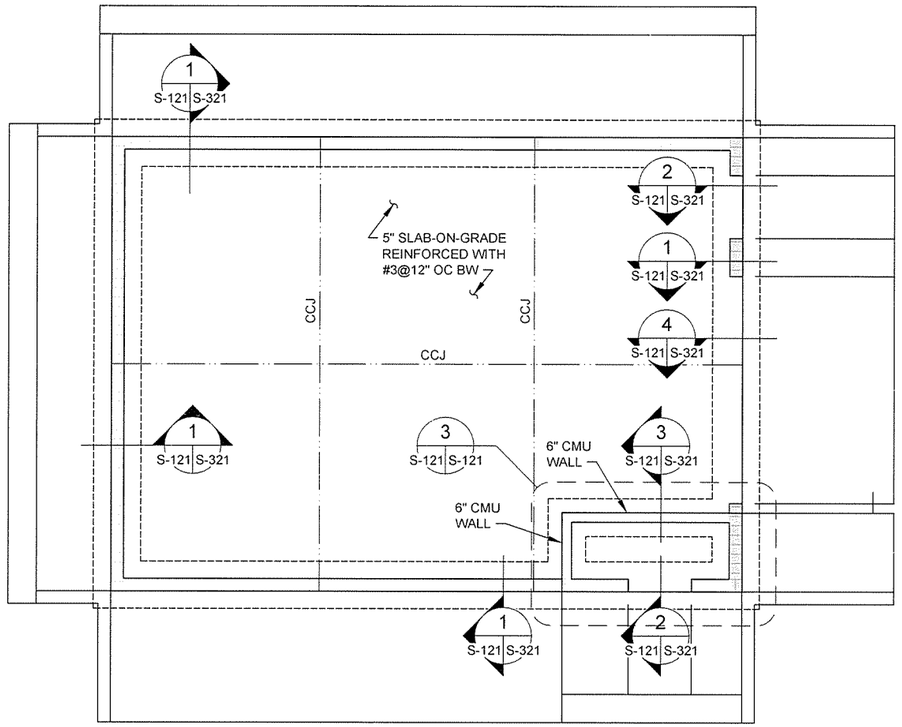


## CMU WALL REINFORCING LEGEND

- CMU WALL REINFORCED WITH #4@48" OC VERT AND HORIZ BOND BEAMS AT 48" OC REINFORCED WITH (2) #4.
- CMU WALL REINFORCED WITH #4@8" OC VERT AND HORIZ BOND BEAMS AT 16" OC REINFORCED WITH (2) #4.
- 6" CMU WALL REINFORCED WITH #4@24" OC VERT.

NOTE:
SEE ARCHITECTURAL FOR WALL CONSTRUCTION JOINT LOCATIONS.

PROJECT NORTH

1 S-121 **FOUNDATION PLAN**
SCALE: 1/4" = 1'-0"

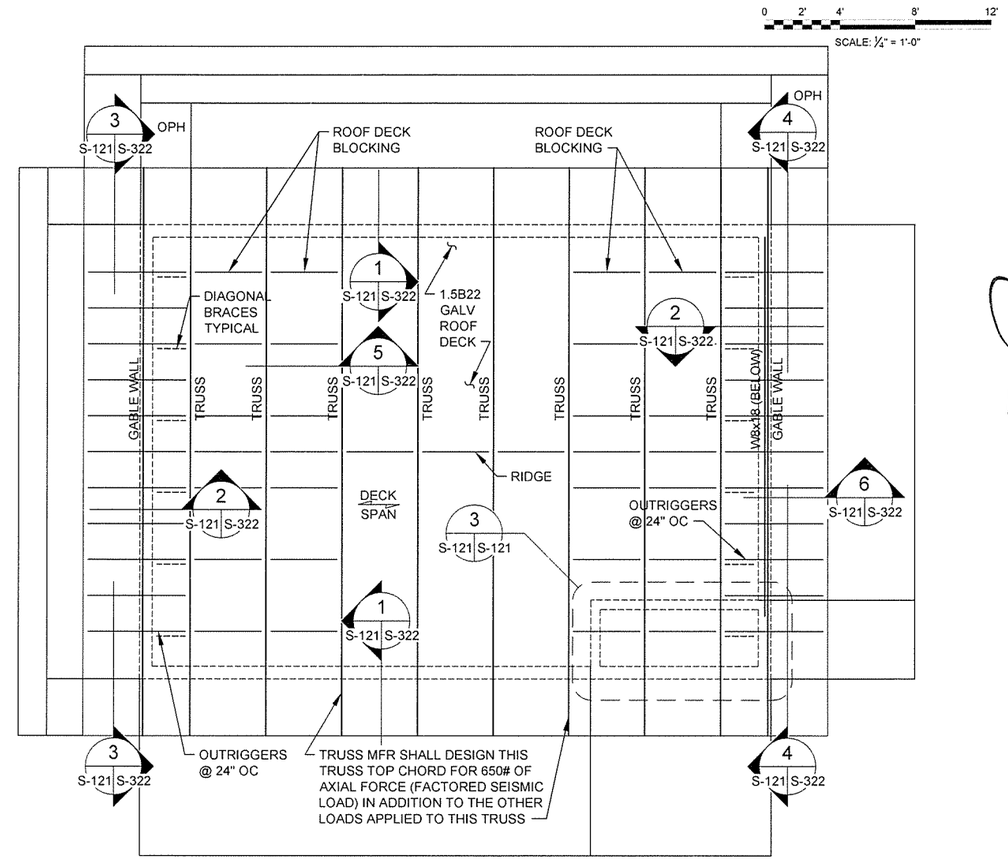


PROJECT NORTH

2 S-121 **ROOF FRAMING PLAN**
SCALE: 1/4" = 1'-0"

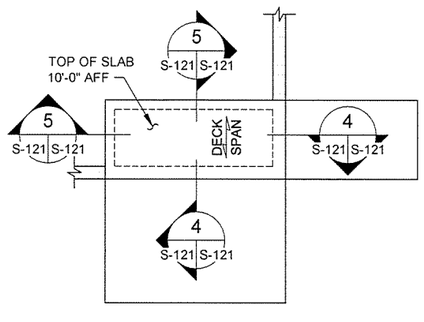


3 S-121 S-121 **PARTIAL PLAN**
SCALE: 1/4" = 1'-0"

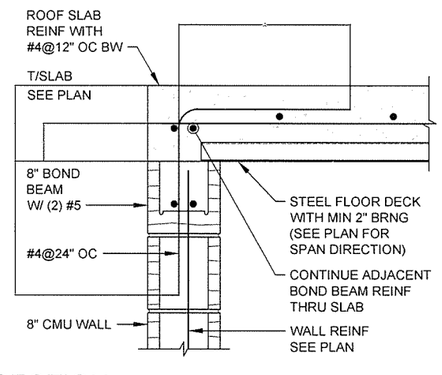


4 S-121 S-121 **SECTION**
SCALE: 1 1/2" = 1'-0"

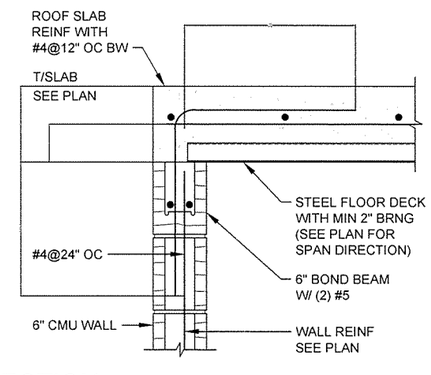


5 S-121 S-121 **SECTION**
SCALE: 1 1/2" = 1'-0"

0 6" 1' 18" 2'
SCALE: 1 1/2" = 1'-0"


GARVER
4701 Northshore Drive
N Little Rock, AR 72118
501-376-3633
www.GarverUSA.com


CERTIFICATE OF AUTHORIZATION
GARVER LLC
No. 766
ARKANSAS-ENGINEER

STATE OF ARKANSAS
LICENSED PROFESSIONAL ENGINEER
No. 15642
DAVID TAYLOR CLEMENT
9/30/15

| Symbol | Description | Date | Appr |
|---|---|---|---|
| IPC | ISSUED FOR CONSTRUCTION | 10/1/15 | JRR |

Designed by: D CLEMENT
Submitted by: John T Watkins, III, P.E., SE, Director, Federal Services
Job Number: 060451
Drawn by: S. BOWEN
Plot Date: 9/30/15
Plot Scale: 1:1
N/A
Checked by: G. ARCHER
Dwg Code:
N/A
File Name: AHTSWR-S-121.DWG
N/A

ARKANSAS HIGHWAY AND TRANSPORTATION DEPARTMENT
ARKANSAS TOURIST INFORMATION CENTER
(WHITE RIVER) (S)
JOB 061451

MAINTENANCE BUILDING
FOUNDATION AND ROOF FRAMING PLANS

Sheet Reference Number:
S-121

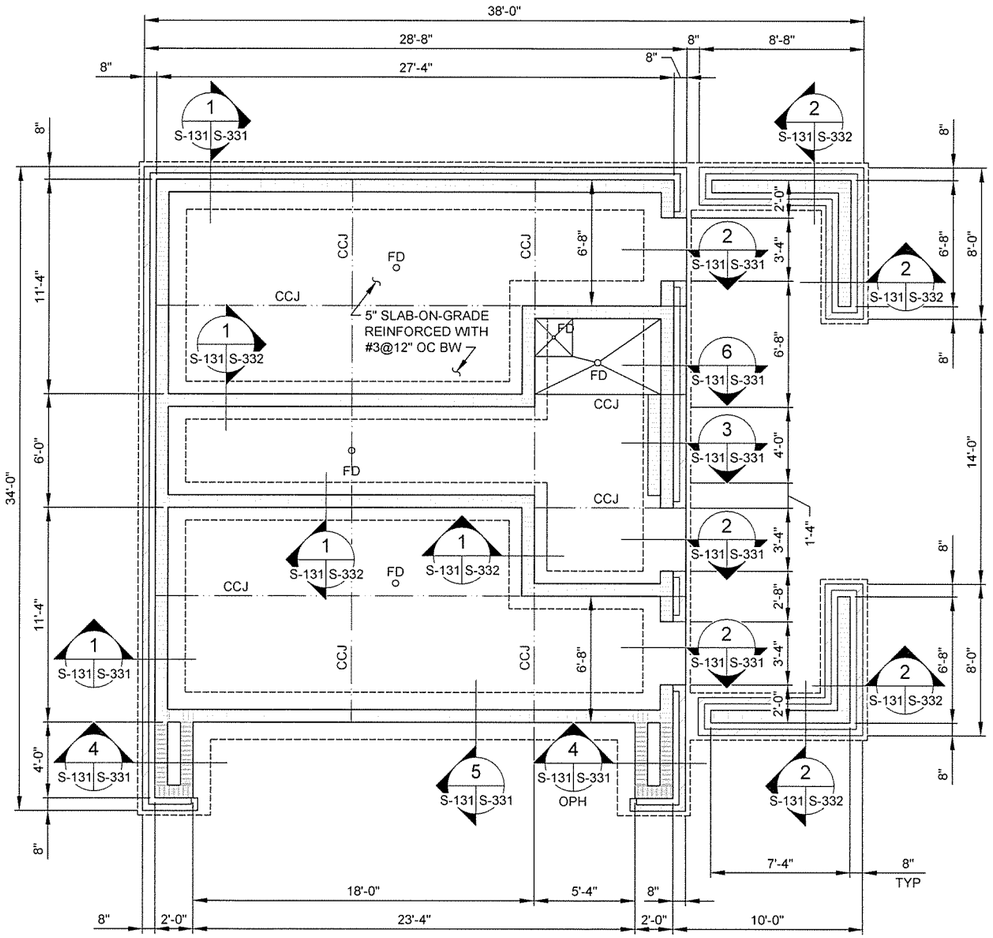


NOTE:
SEE ARCHITECTURAL FOR WALL CONSTRUCTION JOINT LOCATIONS.

## CMU WALL REINFORCING LEGEND

- CMU WALL REINFORCED WITH #4@24" OC VERT AND HORIZ BOND BEAMS AT 48" OC REINFORCED WITH (2) #4.
- CMU WALL REINFORCED WITH #4@16" OC VERT AND HORIZ BOND BEAMS AT 16" OC REINFORCED WITH (2) #4.

PROJECT NORTH

1 / S-131 FOUNDATION PLAN

SCALE: 1/4" = 1'-0"

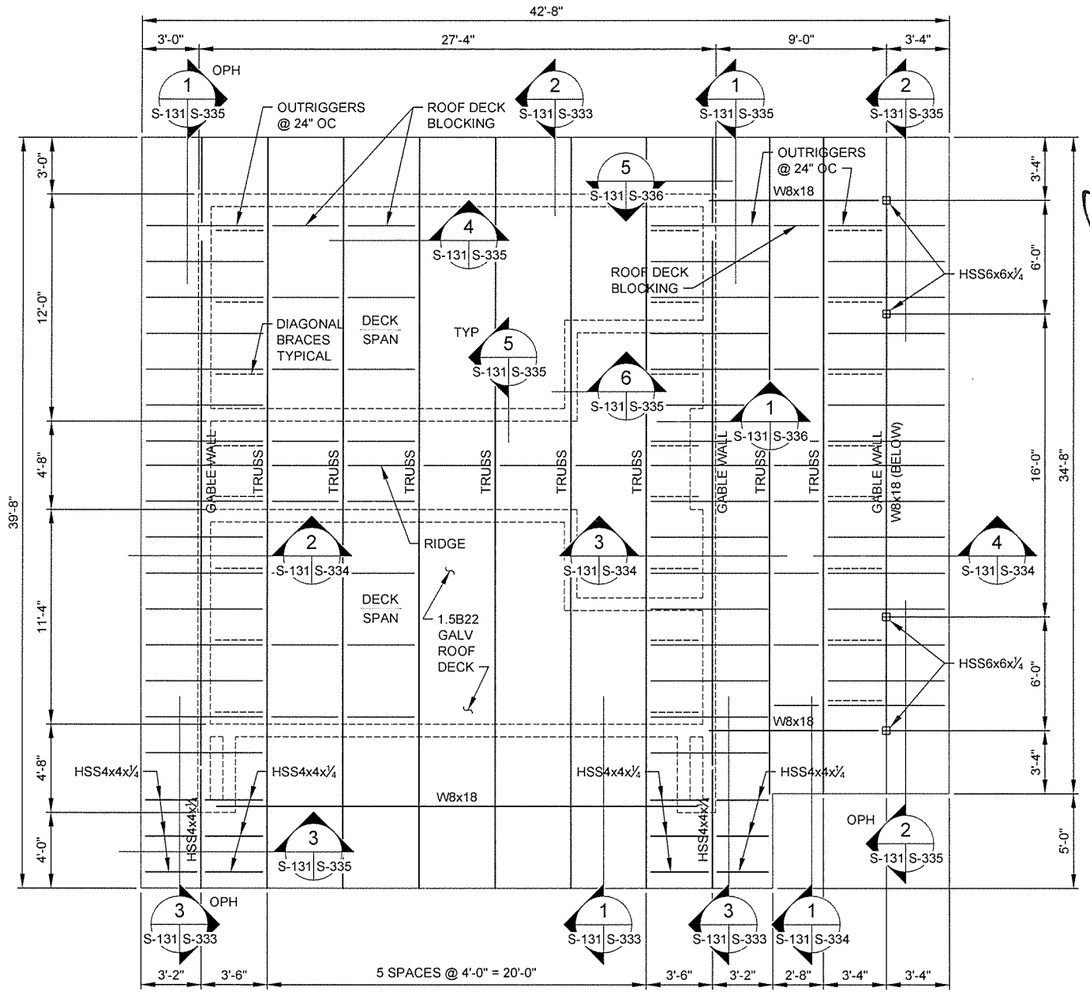


PROJECT NORTH

2 / S-131 ROOF FRAMING PLAN

SCALE: 1/4" = 1'-0"

0 2' 4' 8' 12'
SCALE: 1/4" = 1'-0"


GARVER
4701 Northshore Drive
N Little Rock, AR 72118
501-376-3633
www.GarverUSA.com


CERTIFICATE OF AUTHORIZATION
GARVER LLC No. 766
ARKANSAS-ENGINEER

STATE OF ARKANSAS
LICENSED PROFESSIONAL ENGINEER
No. 15642
DAVID TAYLOR CLEMENT
9/30/15

| Symbol | Description | Date | Appr |
|---|---|---|---|
| IFC | ISSUED FOR CONSTRUCTION | 10/1/15 | JRR |

Designed by: D. CLEMENT
Drawn by: S. BOWEN
Checked by: G. ARCHER
Submitted by: John T. Watkins, III, PE, SE, Director, Federal Services
Plot Date: 9/30/15
Plot Scale: 1:1
Drwg Code: -
File Name: AH15WR-S-131.DWG
Job Number: 060451
N/A
N/A
N/A

ARKANSAS HIGHWAY AND TRANSPORTATION DEPARTMENT
ARKANSAS TOURIST INFORMATION CENTER
(WHITE RIVER) (S)
JOB 061451

TRUCKER-VENDING BUILDING
FOUNDATION AND ROOF FRAMING PLANS

Sheet Reference Number:
S-131

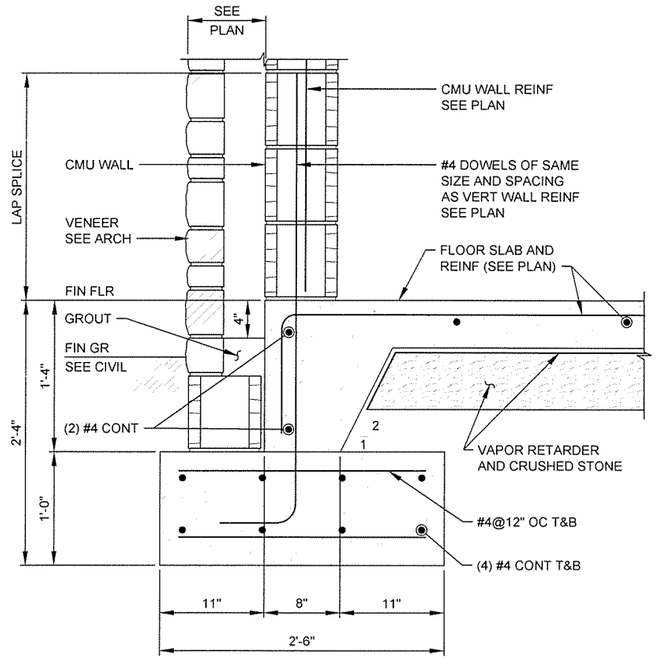


1 SECTION
S-101 S-301 SCALE: 1½" = 1'-0"

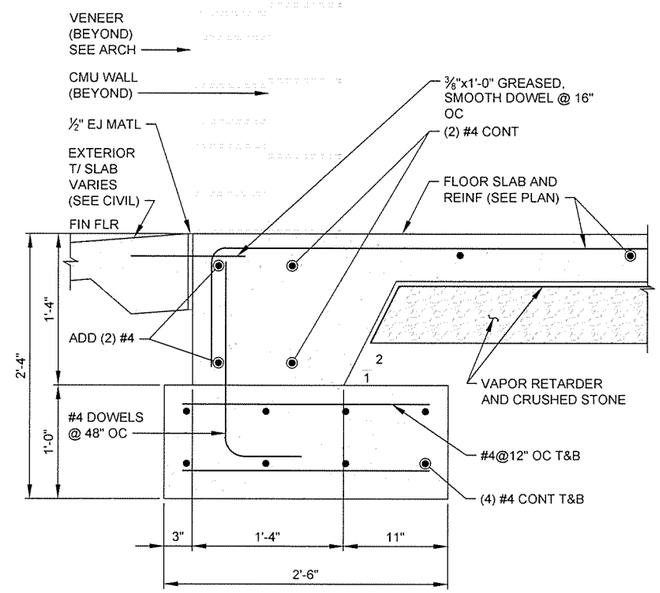


2 SECTION
S-101 S-301 SCALE: 1½" = 1'-0"

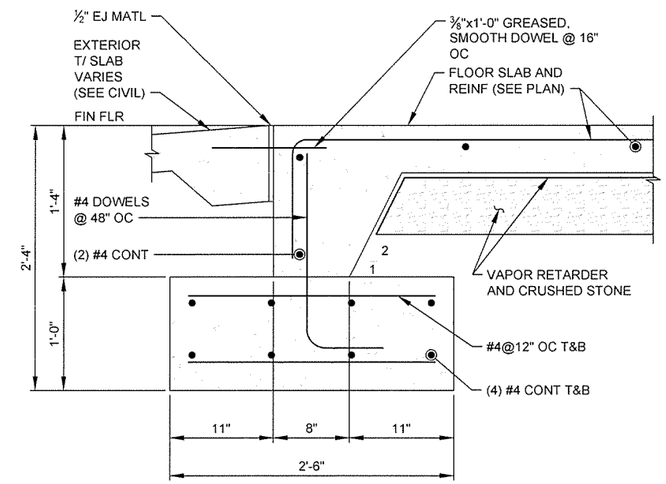


3 SECTION
S-101 S-301 SCALE: 1½" = 1'-0"

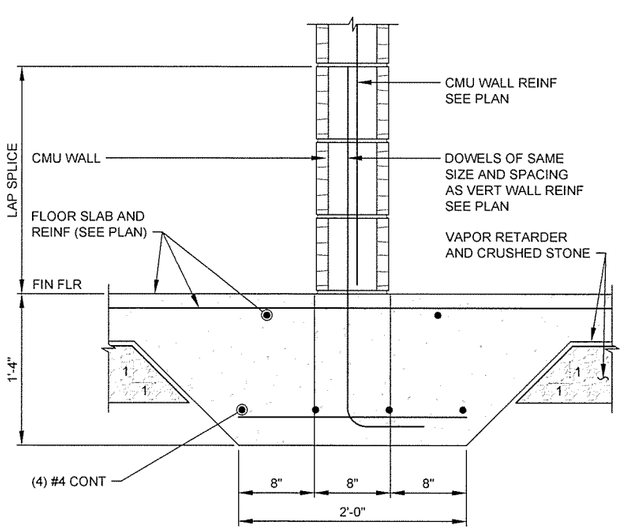


4 SECTION
S-101 S-301 SCALE: 1½" = 1'-0"

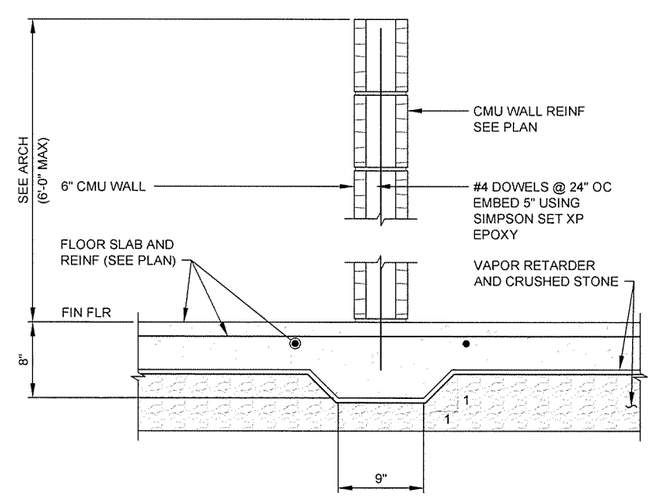


5 SECTION
S-101 S-301 SCALE: 1½" = 1'-0"

0 6" 1' 18" 2'
SCALE: 1½" = 1'-0"

GARVER
4701 Northshore Drive
N Little Rock, AR 72118
501-376-3633
www.GarverUSA.com

CERTIFICATE OF AUTHORIZATION
GARVER LLC
No. 766
ARKANSAS ENGINEER

STATE OF ARKANSAS
LICENSED PROFESSIONAL ENGINEER
No. 15642
DAVID TAYLOR CLEMENT
9/30/15

| Symbol | Description | Date | Appr |
|---|---|---|---|
| IFC | ISSUED FOR CONSTRUCTION | 10/1/15 | JRR |

Designed by: D. CLEMENT
Submitted by: John T. Watkins, III, PE, SE Director, Federal Services
Job Number: 060451
Drawn by: S. BOWEN
Plot Date: 9/30/15
Plot Scale: 1:1
N/A
Checked by: G. ARCHER
Dwg Code:
N/A
File Name: AH15WR-S-301.DWG
N/A

ARKANSAS HIGHWAY AND TRANSPORTATION DEPARTMENT
ARKANSAS TOURIST INFORMATION CENTER
(WHITE RIVER) (S)
JOB 061451

TOURIST INFORMATION CENTER
FOUNDATION SECTIONS

Sheet Reference Number:
S-301

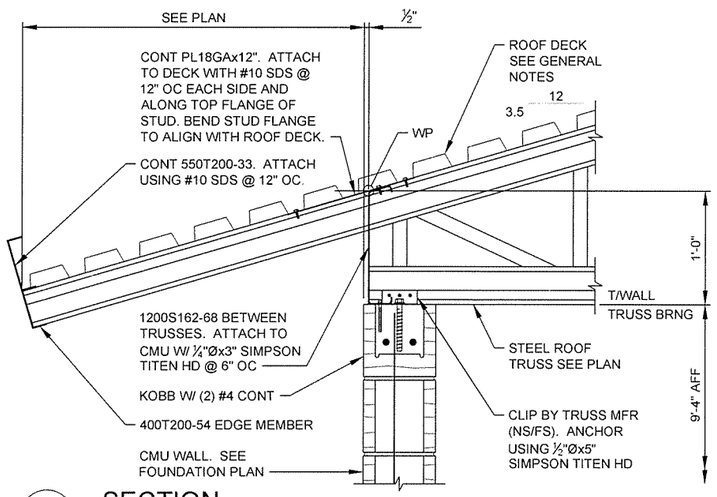


1 SECTION
S-102 | S-302 SCALE: 1½" = 1'-0"

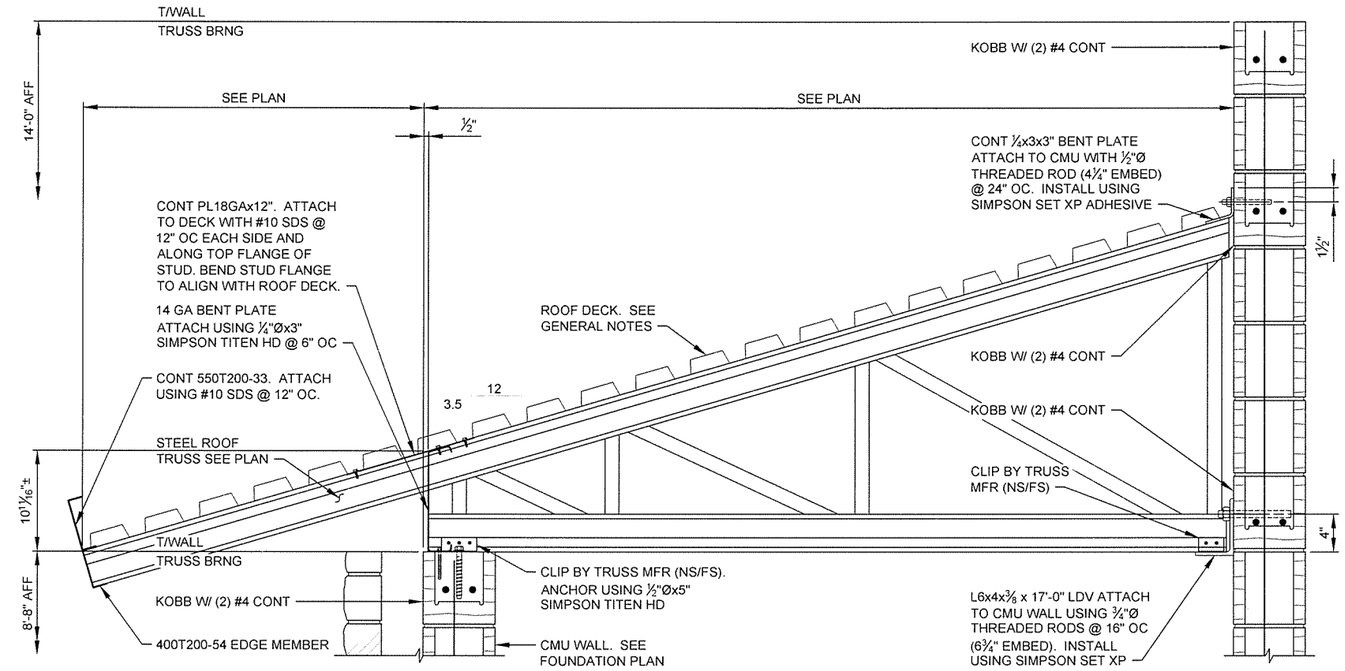


2 SECTION
S-102 | S-302 SCALE: 1½" = 1'-0"

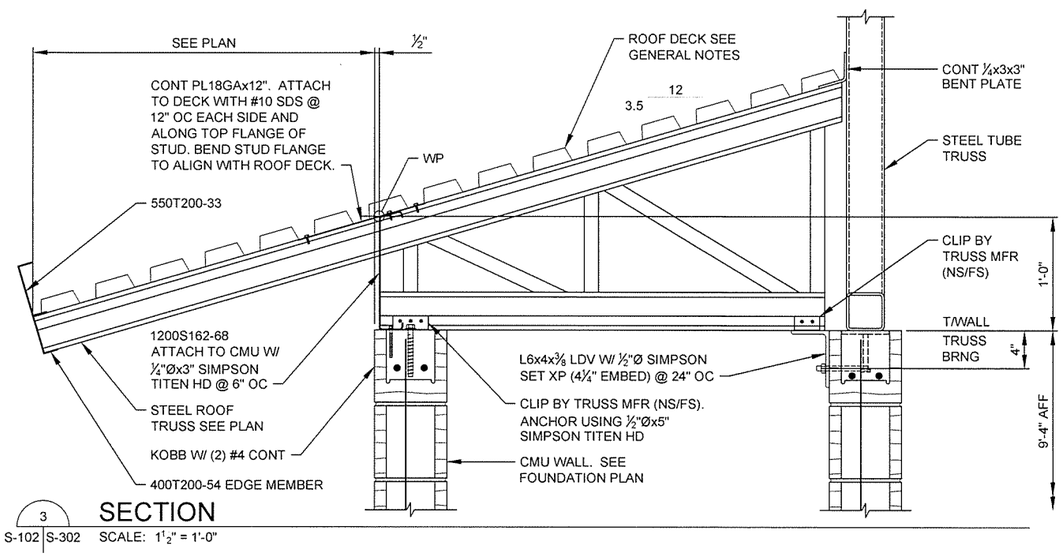


3 SECTION
S-102 | S-302 SCALE: 1½" = 1'-0"

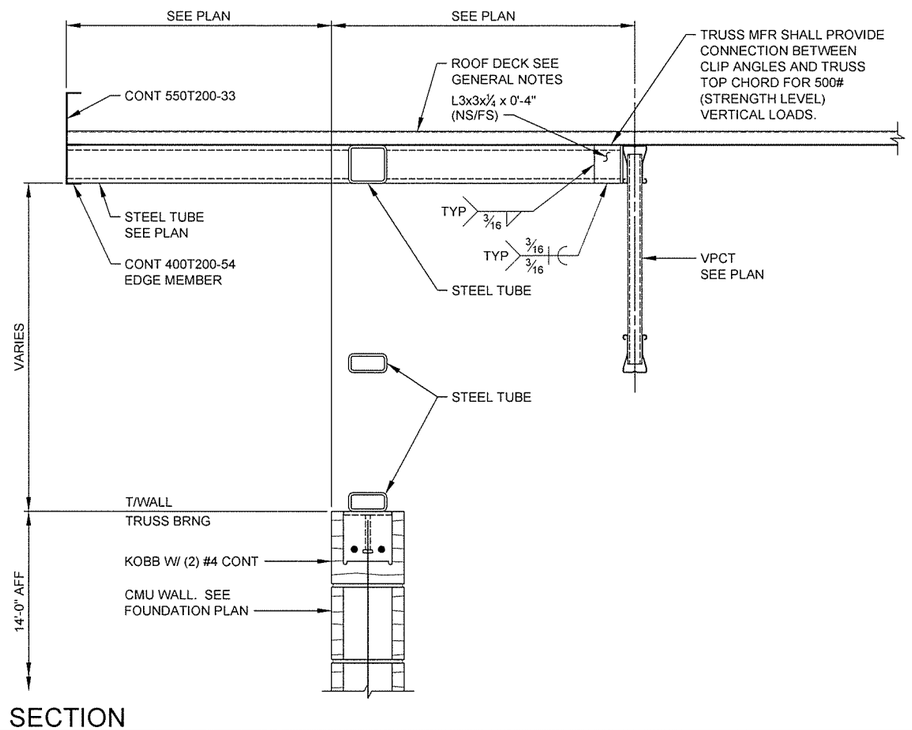


4 SECTION
S-102 | S-302 SCALE: 1½" = 1'-0"

GARVER
4701 Northshore Drive
N Little Rock, AR 72118
501-376-3633
www.GarverUSA.com

CERTIFICATE OF AUTHORIZATION ARKANSAS ENGINEERING GARVER LLC No. 766

STATE OF ARKANSAS LICENSED PROFESSIONAL ENGINEER No. 15642 DAVID TAYLOR CLEMENT
9/30/15

| IPC Symbol | ISSUED FOR CONSTRUCTION Description | 10/1/15 Date | JRR Appr. |
|---|---|---|---|

| | | | |
|---|---|---|---|
| Designed by D. CLEMENT | Submitted by John T. Williams, PE, SE Director Facilities Services | Job Number 060451 | |
| Drawn by S. BOWEN | Plot Date 9/30/15 | Plot Scale 1:1 | N/A |
| Checked by G. ARCHER | Dwg Code . | N/A | N/A |
| File Name A115WR-S-302.DWG | | N/A | N/A |

ARKANSAS HIGHWAY AND TRANSPORTATION DEPARTMENT
ARKANSAS TOURIST INFORMATION CENTER
(WHITE RIVER) (S)
JOB 061451

TOURIST INFORMATION CENTER
FRAMING SECTIONS

Sheet Reference Number:
S-302

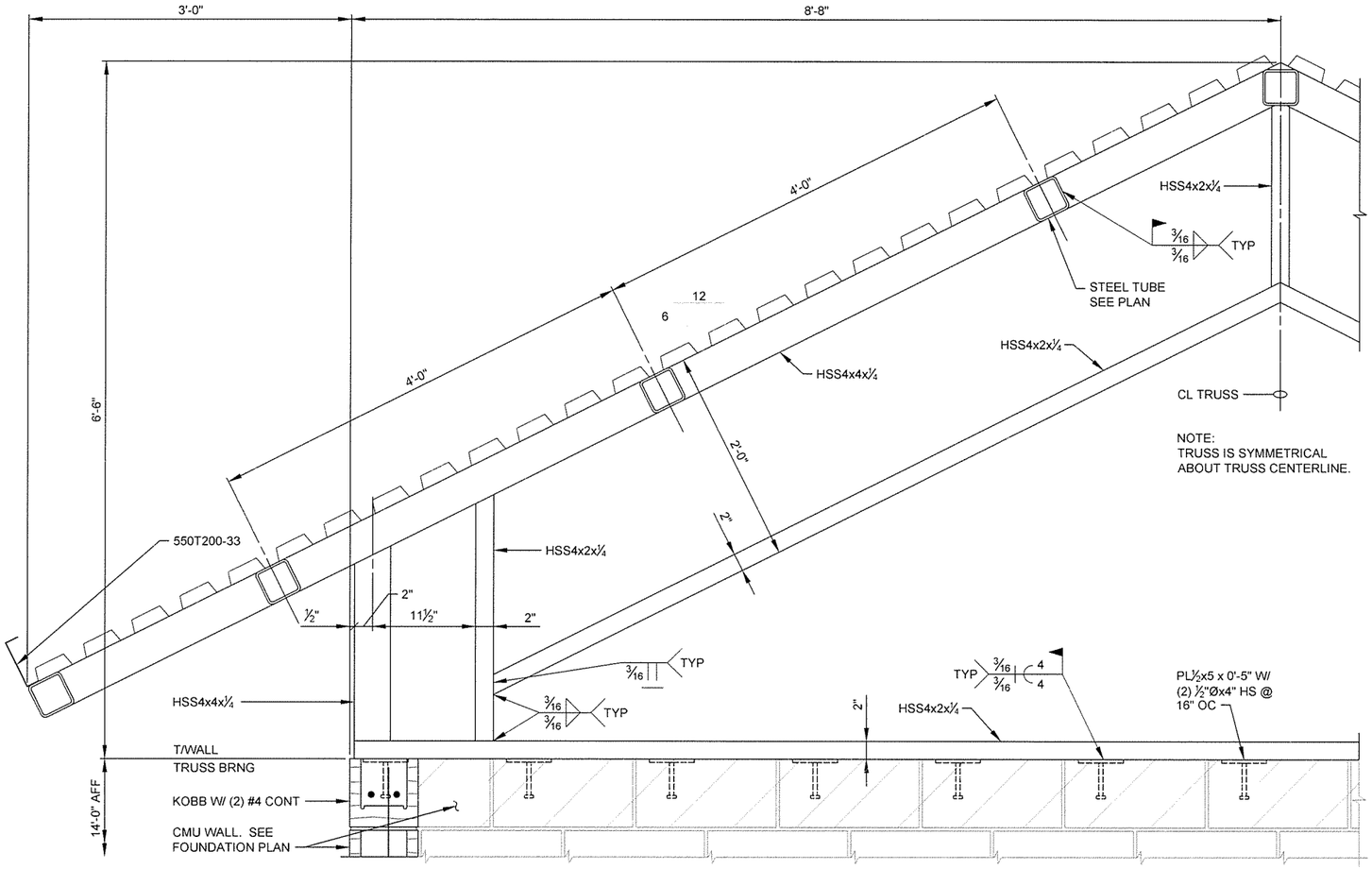


NOTE:
TRUSS IS SYMMETRICAL
ABOUT TRUSS CENTERLINE.

1 SECTION
S-102 S-303 SCALE: 1½" = 1'-0"

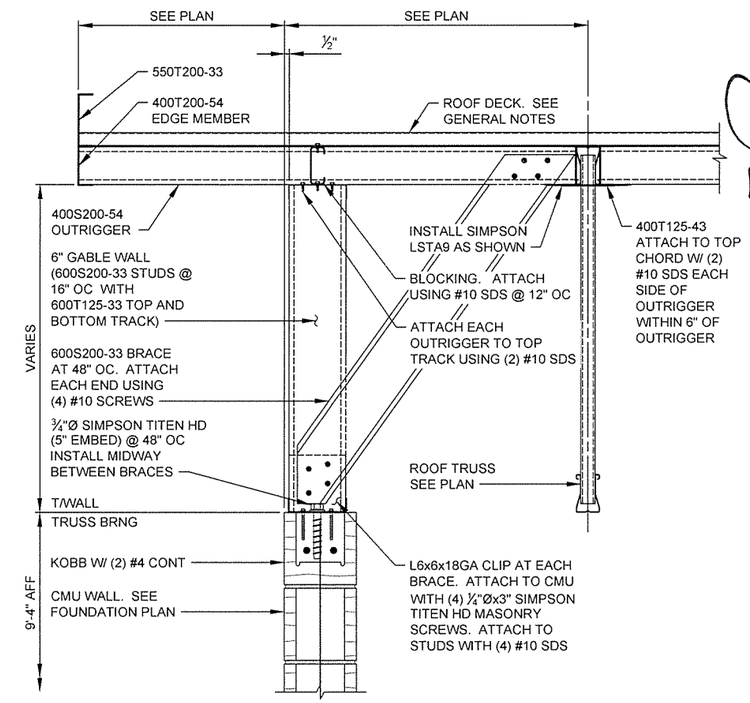


2 SECTION
S-102 S-303 SCALE: 1½" = 1'-0"

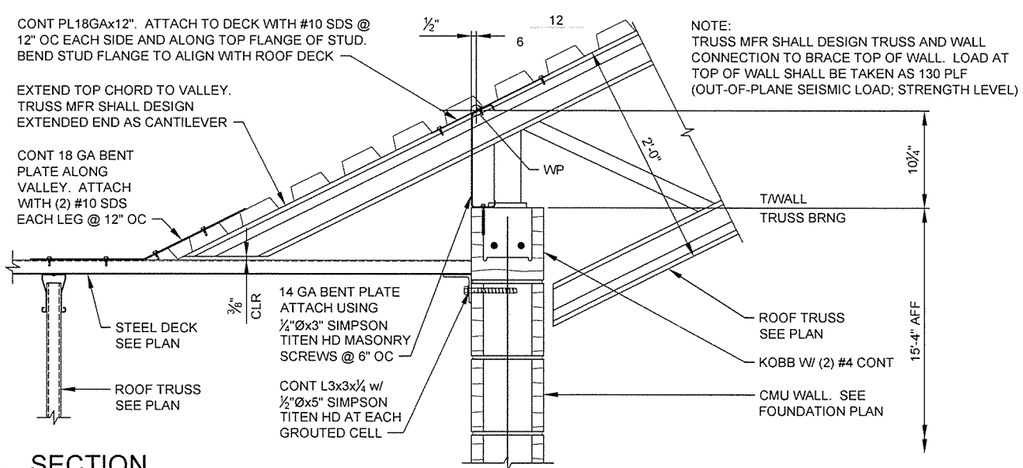


NOTE:
TRUSS MFR SHALL DESIGN TRUSS AND WALL
CONNECTION TO BRACE TOP OF WALL. LOAD AT
TOP OF WALL SHALL BE TAKEN AS 130 PLF
(OUT-OF-PLANE SEISMIC LOAD; STRENGTH LEVEL)

3 SECTION
S-102 S-303 SCALE: 1½" = 1'-0"

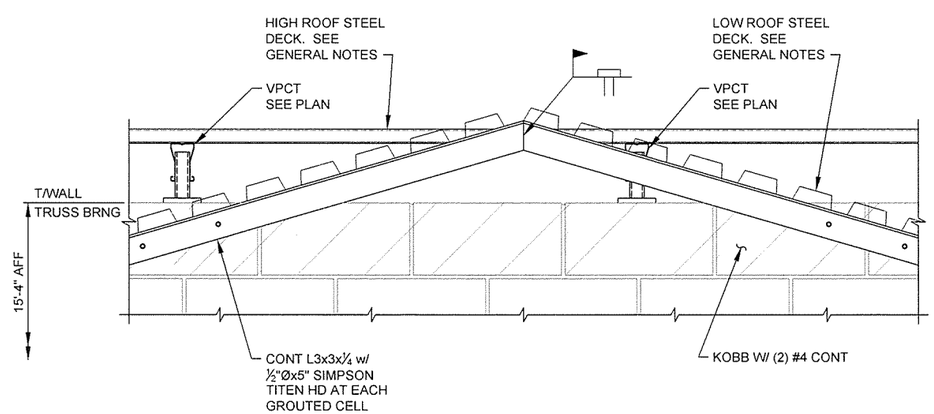


4 SECTION
S-102 S-303 SCALE: 1½" = 1'-0"

SCALE: 1½" = 1'-0"


GARVER
4701 Northshore Drive
N Little Rock, AR 72118
501-375-3633
www.GarverUSA.com


CERTIFICATE OF AUTHORIZATION
GARVER LLC
No. 766
ARKANSAS ENGINEER

STATE OF ARKANSAS
LICENSED PROFESSIONAL ENGINEER
No. 15642
DAVID TAYLOR CLEMENT
9/30/15

| Symbol | Description | Date | Appr. |
|---|---|---|---|
| IFC | ISSUED FOR CONSTRUCTION | 10/1/15 | JRR |

Designed by D. CLEMENT
Drawn by S. BOWEN
Checked by G. ARCHER
Submitted by John T. Williams III, PE, SE, Director, Federal Services
Plot Date 9/30/15
Plot Scale 1:1
Dwg Code -
File Name AH15WR-S-303.DWG
Job Number 060451

ARKANSAS HIGHWAY AND TRANSPORTATION DEPARTMENT
ARKANSAS TOURIST INFORMATION CENTER
(WHITE RIVER) (S)
JOB 061451

TOURIST INFORMATION CENTER
FRAMING SECTIONS

Sheet Reference Number:
S-303

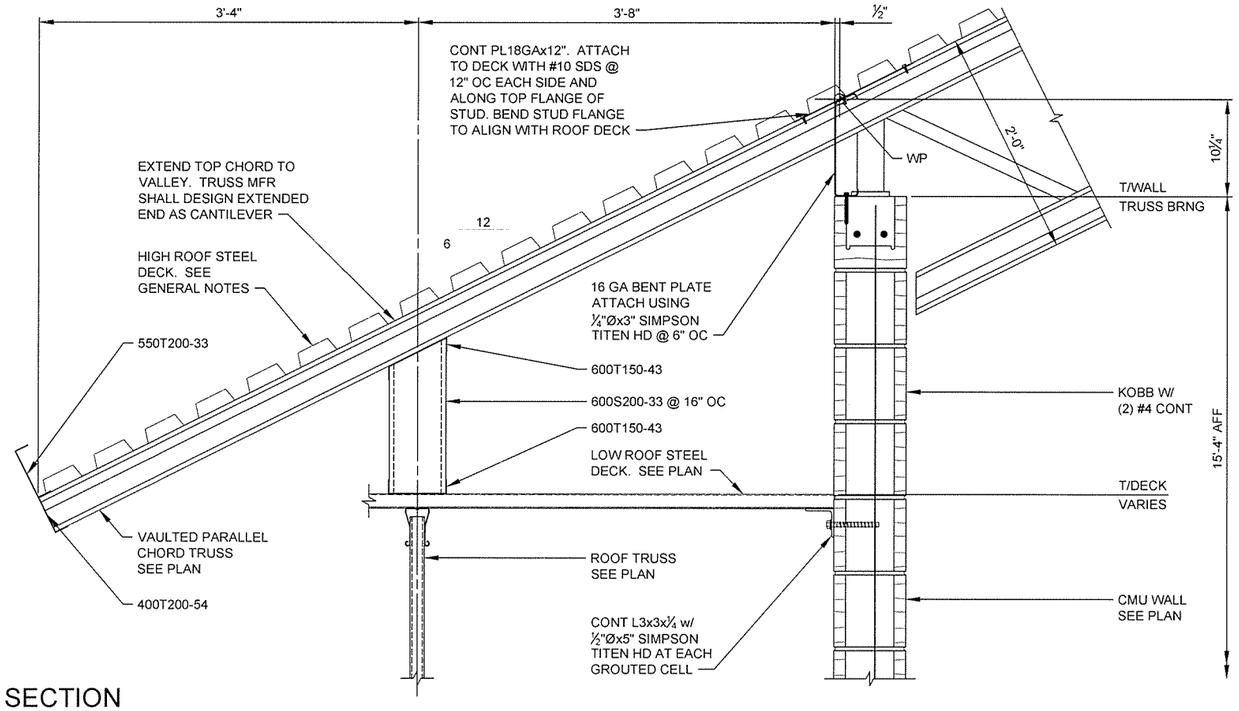


1 SECTION
S-102 S-304 SCALE: 1½" = 1'-0"

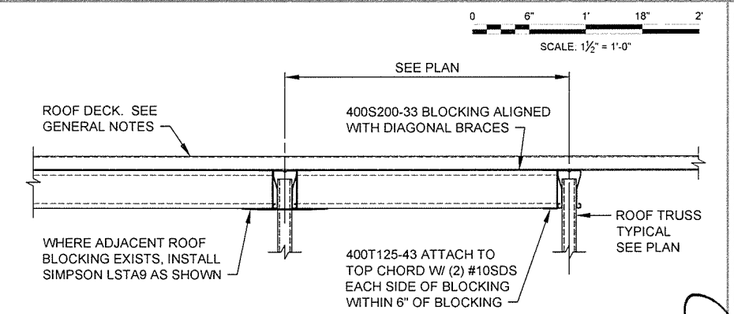


2 SECTION
S-102 S-304 SCALE: 1½" = 1'-0"

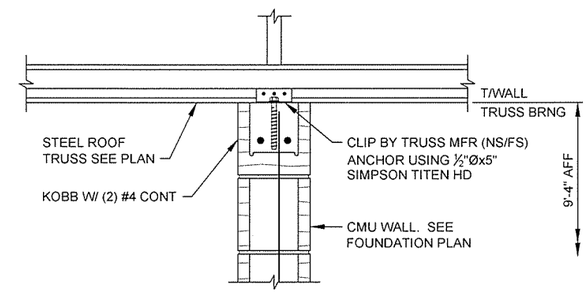


4 SECTION
S-102 S-304 SCALE: 1½" = 1'-0"

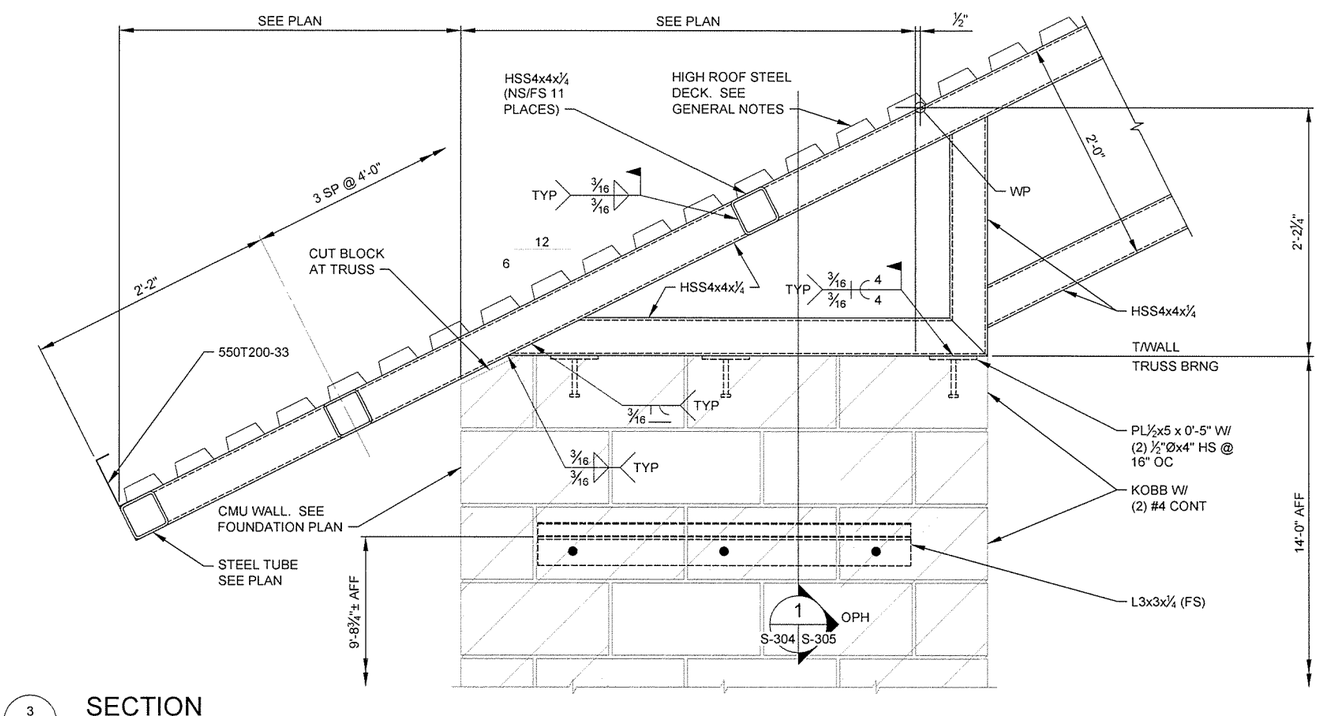


3 SECTION
S-102 S-304 SCALE: 1½" = 1'-0"

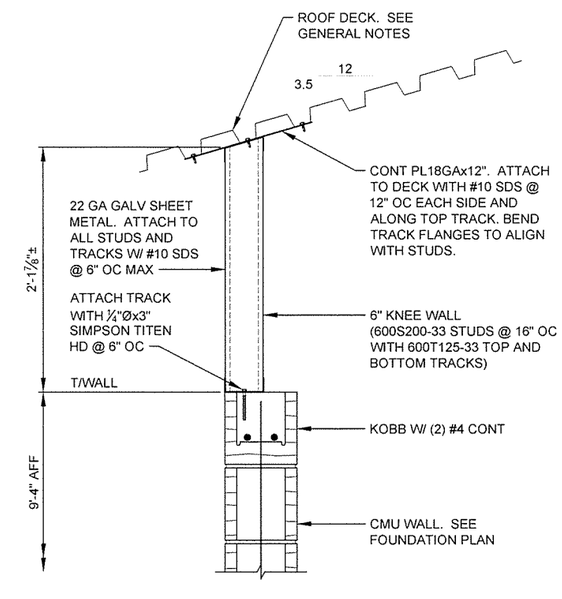


5 SECTION
S-102 S-304 SCALE: 1½" = 1'-0"


GARVER
4701 Northshore Drive
N Little Rock, AR 72118
501-376-3633
www.GarverUSA.com


CERTIFICATE OF AUTHORIZATION
GARVER LLC
No. 766
ARKANSAS ENGINEER

STATE OF ARKANSAS
LICENSED PROFESSIONAL ENGINEER
No. 15642
DAVID TAYLOR CLEMENT
9/30/15

| Symbol | Description | Date | Appr. |
|---|---|---|---|
| IFC | ISSUED FOR CONSTRUCTION | 10/1/15 | JRR |

Designed by: J RAMSEY
Submitted by: John T. Williams, PE, SE, Director, Federal Services
Job Number: 060451
Drawn by: J DEMAINE
Plot Date: 9/30/15
Plot Scale: 1:1
N/A
Checked by: G. ARCHER
Dwg Code: .
N/A
File Name: AH15VR-S-304 DWG
N/A

ARKANSAS HIGHWAY AND TRANSPORTATION DEPARTMENT
ARKANSAS TOURIST INFORMATION CENTER
(WHITE RIVER) (S)
JOB 061451

TOURIST INFORMATION CENTER
FRAMING SECTIONS

Sheet Reference Number:
S-304

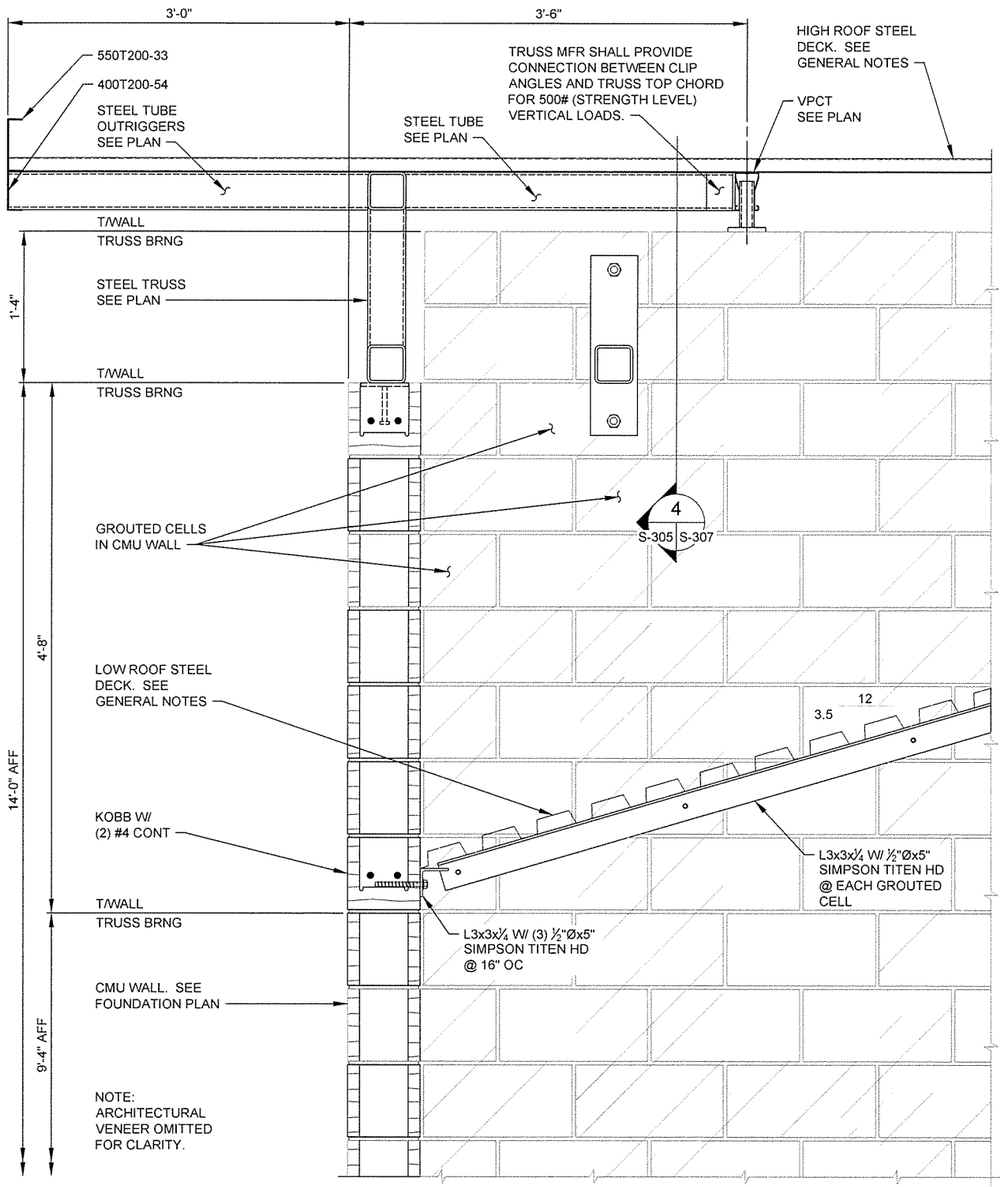


1 SECTION
S-102 S-305 SCALE: 1½" = 1'-0"

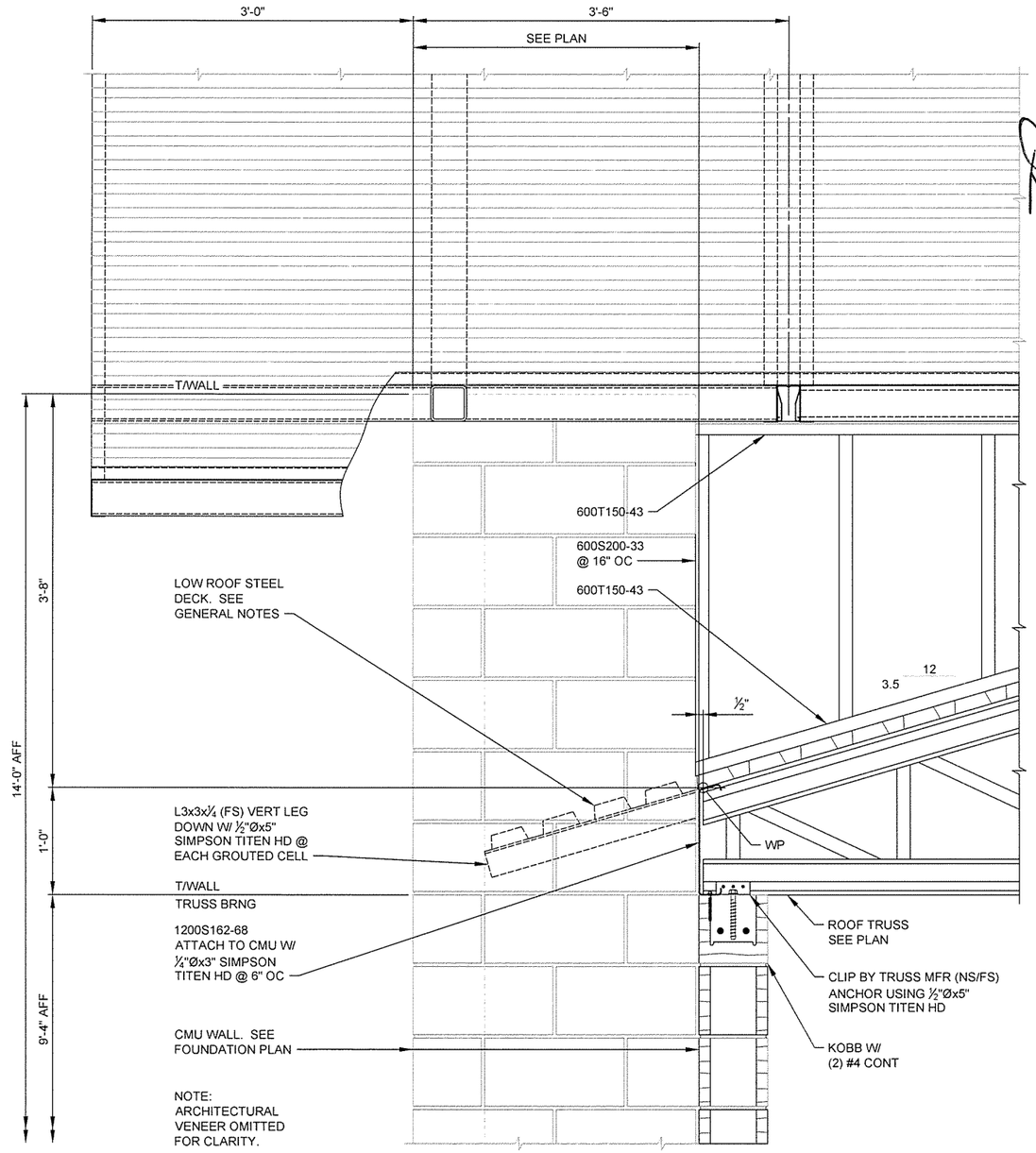


2 SECTION
S-102 S-305 SCALE: 1½" = 1'-0"

0 6" 1' 18" 2'
SCALE: 1½" = 1'-0"

GARVER
4701 Northshore Drive
N Little Rock, AR 72118
501-376-3633
www.GarverUSA.com

CERTIFICATE OF AUTHORIZATION ARKANSAS ENGINEER
GARVER LLC No. 766

STATE OF ARKANSAS LICENSED PROFESSIONAL ENGINEER No. 15642 DAVID TAYLOR CLEMENT
9/30/15

| Symbol | Description | Date | Appr. |
|---|---|---|---|
| IFC | ISSUED FOR CONSTRUCTION | 10/1/15 | JRR |

Designed by: D. CLEMENT
Drawn by: S. BOWEN
Submitted by: John T. Williams, P.E., S.E. Director, Federal Services
Plot Date: 9/30/15
Plot Scale: 1:1
Checked by: G. ARCHER
Dwg Code: .
Job Number: 060451
File Name: AH15WR-S-305.DWG

ARKANSAS HIGHWAY AND TRANSPORTATION DEPARTMENT
ARKANSAS TOURIST INFORMATION CENTER
(WHITE RIVER) (S)
JOB 061451

TOURIST INFORMATION CENTER
FRAMING SECTIONS

Sheet Reference Number:
S-305

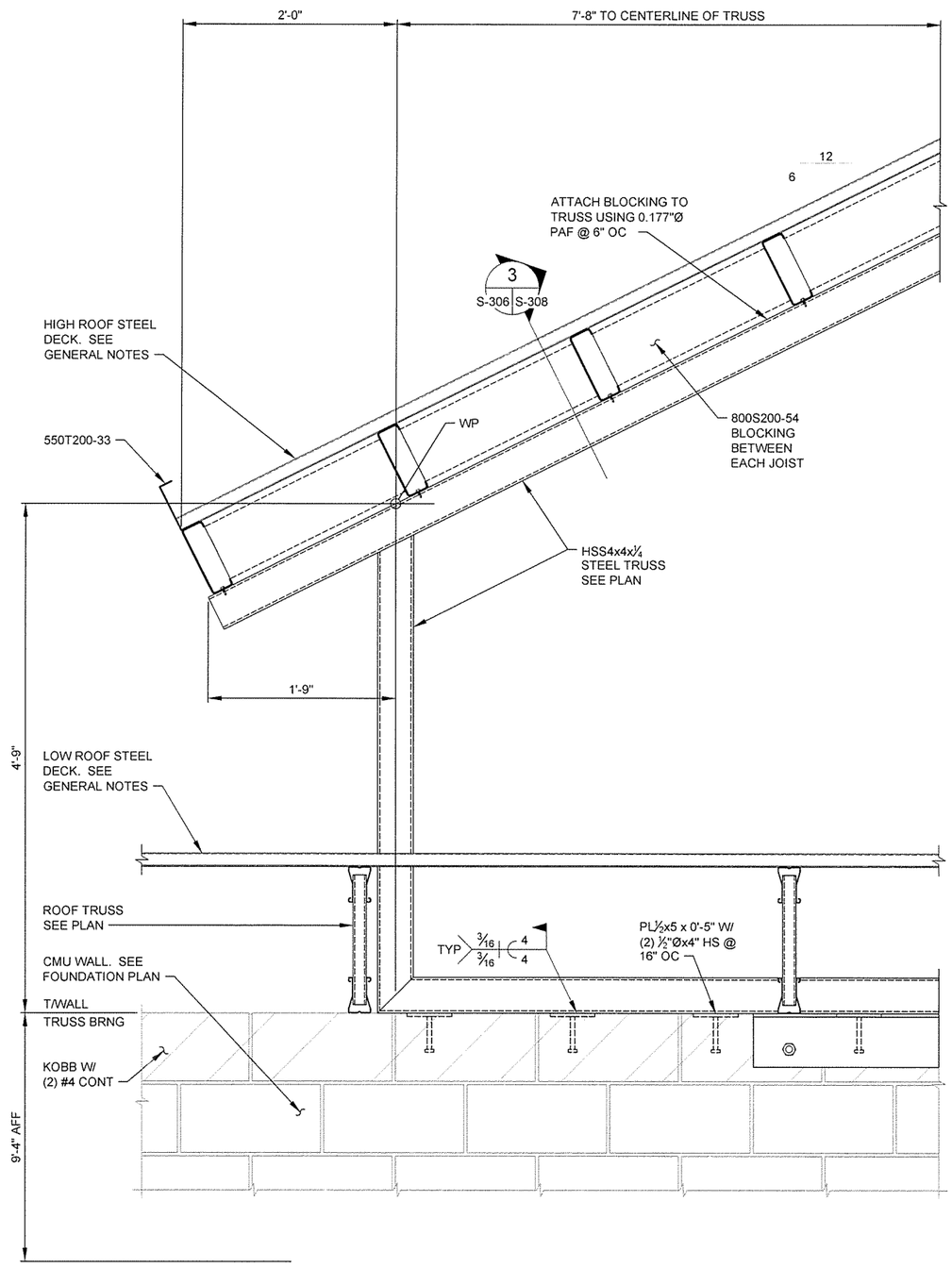


1 S-102 S-306 SECTION
SCALE: 1½" = 1'-0"

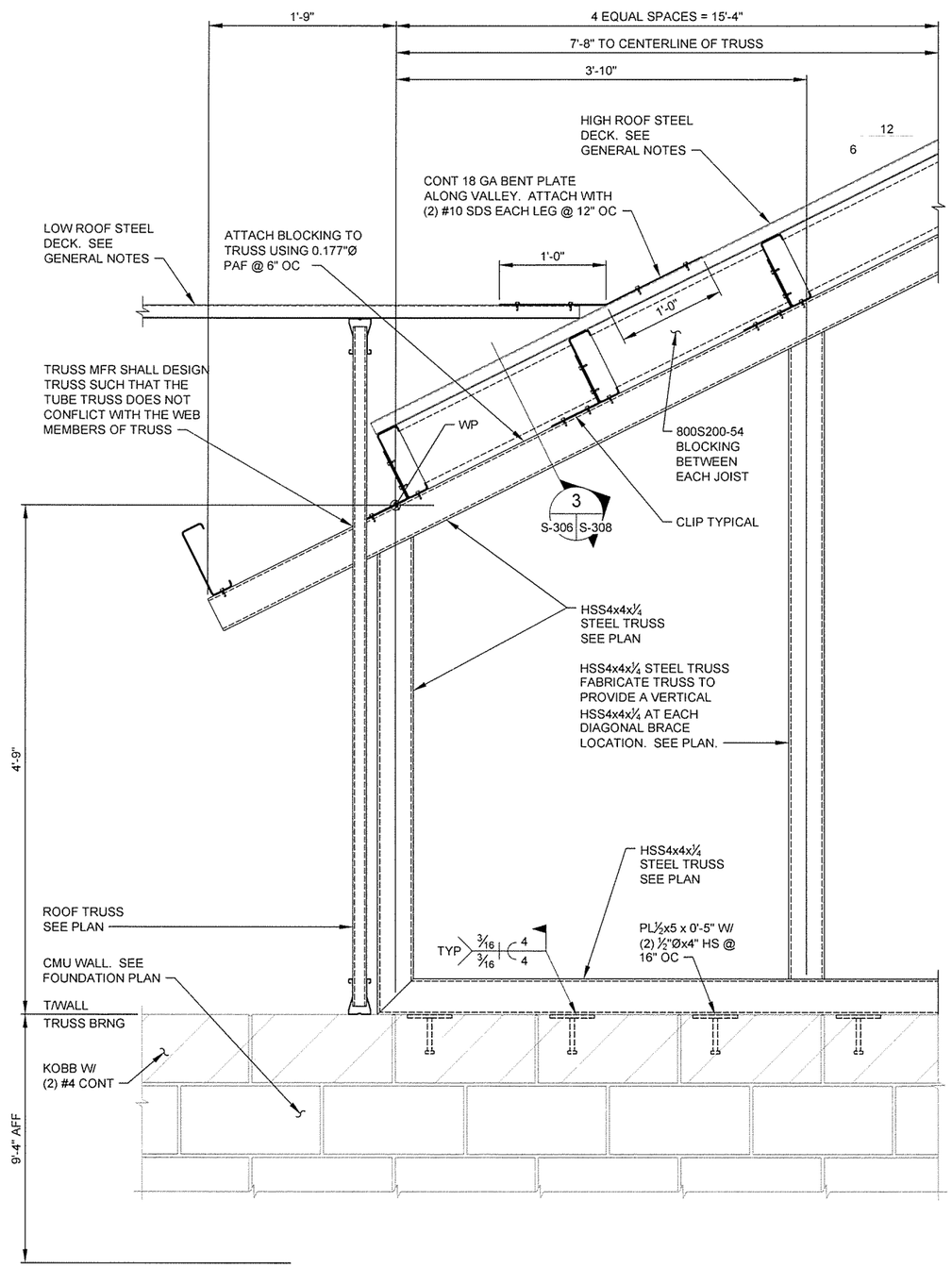


2 S-102 S-306 SECTION
SCALE: 1½" = 1'-0"

0 6" 1' 18" 2'
SCALE: 1½" = 1'-0"


GARVER
4701 Northshore Drive
N Little Rock, AR 72118
501-376-3633
www.GarverUSA.com


CERTIFICATE OF AUTHORIZATION
GARVER LLC
No. 766
ARKANSAS ENGINEER

STATE OF ARKANSAS
LICENSED PROFESSIONAL ENGINEER
No. 15642
DAVID TAYLOR CLEMENT
9/30/15

| Symbol | Description | Date | Appr |
|---|---|---|---|
| IFC | ISSUED FOR CONSTRUCTION | 10/1/15 | JRR |

Designed by: D. CLEMENT
Drawn by: S. BOWEN
Checked by: G. ARCHER
Submitted by: John T. Watkins, III, PE, SE, Director, Federal Services
Plot Date: 9/30/15
Plot Scale: 1:1
Drwg Code: -
File Name: AH15WR-S-306 DWG
Job Number: 060451
N/A
N/A
N/A

ARKANSAS HIGHWAY AND TRANSPORTATION DEPARTMENT
ARKANSAS TOURIST INFORMATION CENTER
(WHITE RIVER) (S)
JOB 061451

TOURIST INFORMATION CENTER
FRAMING SECTIONS

Sheet Reference Number:
S-306

Sheet 90 of 130

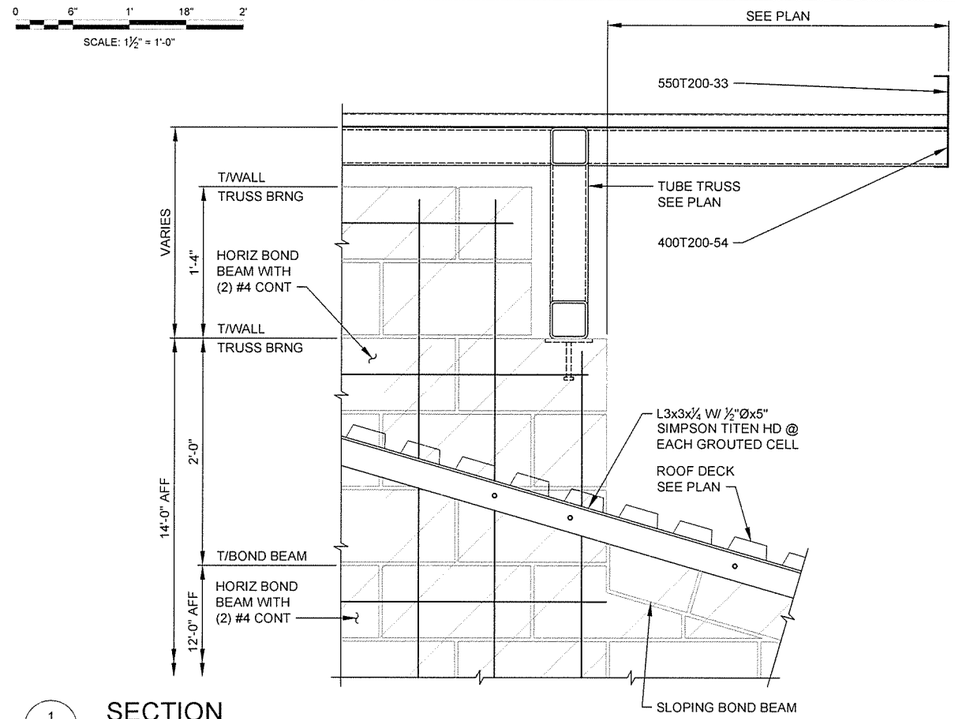


1 SECTION
S-102 | S-307 SCALE: 1½" = 1'-0"

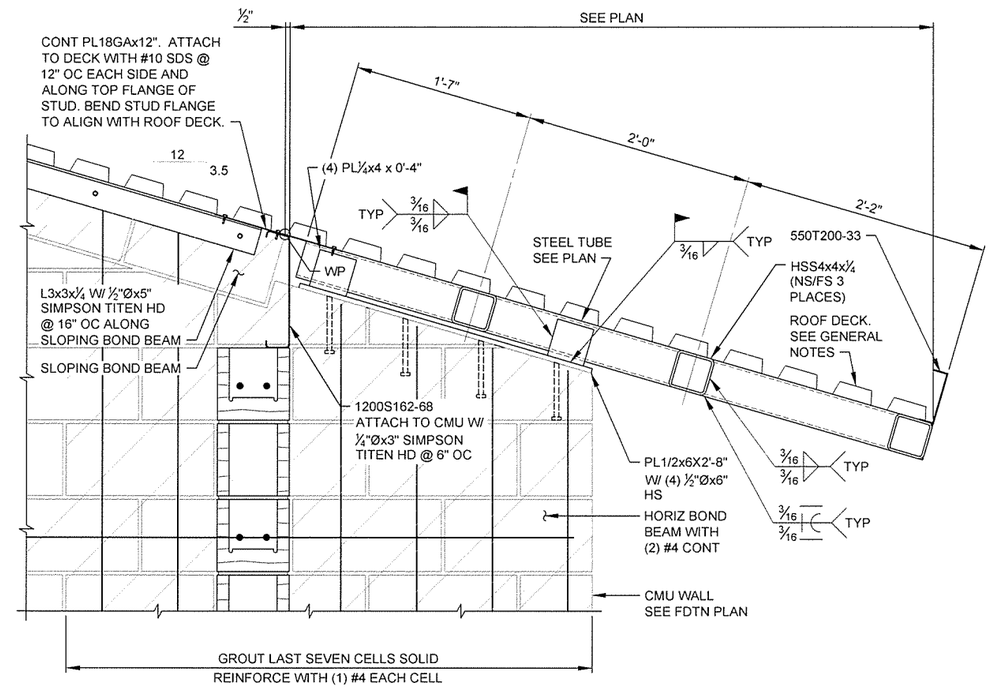


2 SECTION
S-102 | S-307 SCALE: 1½" = 1'-0"

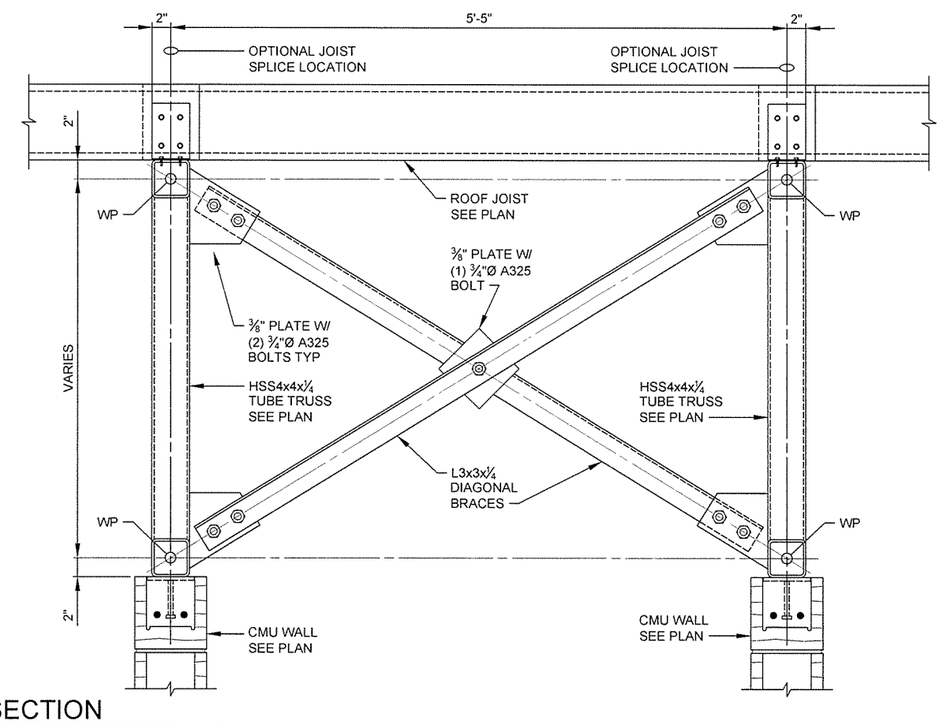


3 SECTION
S-102 | S-307 SCALE: 1½" = 1'-0"

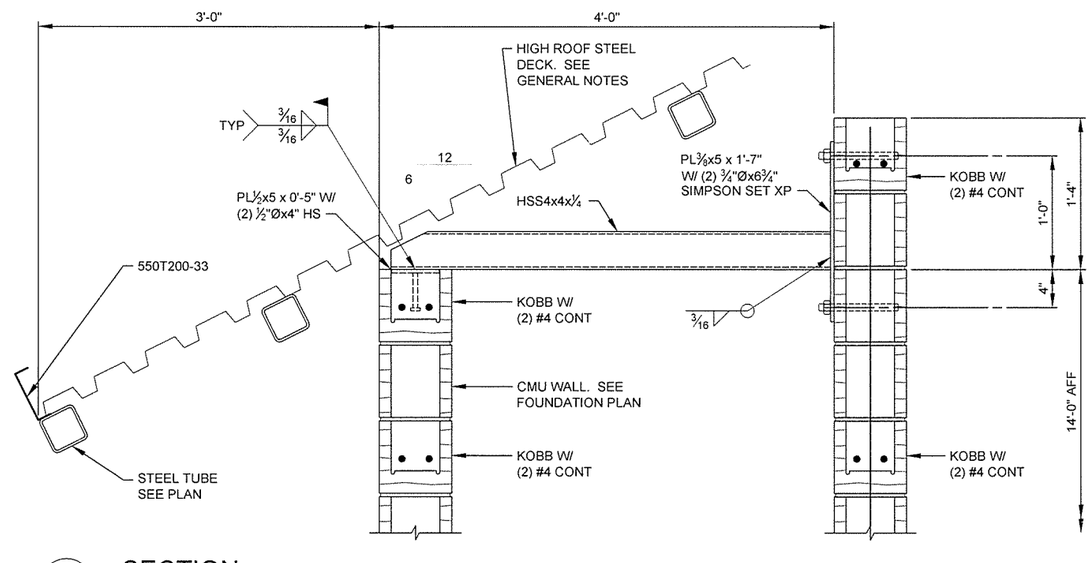


4 SECTION
S-102 | S-307 SCALE: 1½" = 1'-0"

GARVER
4701 Northshore Drive
N Little Rock, AR 72118
501-376-3633
www.GarverUSA.com

CERTIFICATE OF AUTHORIZATION
GARVER LLC
No. 766
ARKANSAS-ENGINEER

STATE OF ARKANSAS
LICENSED PROFESSIONAL ENGINEER
No. 15642
DAVID TAYLOR CLEMENT
9/30/15

| Symbol | Description | Date | Appr. |
|---|---|---|---|
| IFC | ISSUED FOR CONSTRUCTION | 10/1/15 | JRR |

Designed by: D. CLEMENT
Submitted by: John T. Watkins, III, PE, SE, Director, Federal Services
Job Number: 060451
Drawn by: S. BOWEN
Plot Date: 9/30/15
Plot Scale: 1:1
N/A
Checked by: G. ARCHER
Dwg Code:
N/A
File Name: AH15WR-S-307.DWG
N/A

ARKANSAS HIGHWAY AND TRANSPORTATION DEPARTMENT
ARKANSAS TOURIST INFORMATION CENTER
(WHITE RIVER) (S)
JOB 061451

TOURIST INFORMATION CENTER
FRAMING SECTIONS

Sheet Reference Number:
S-307

Sheet 91 of 130

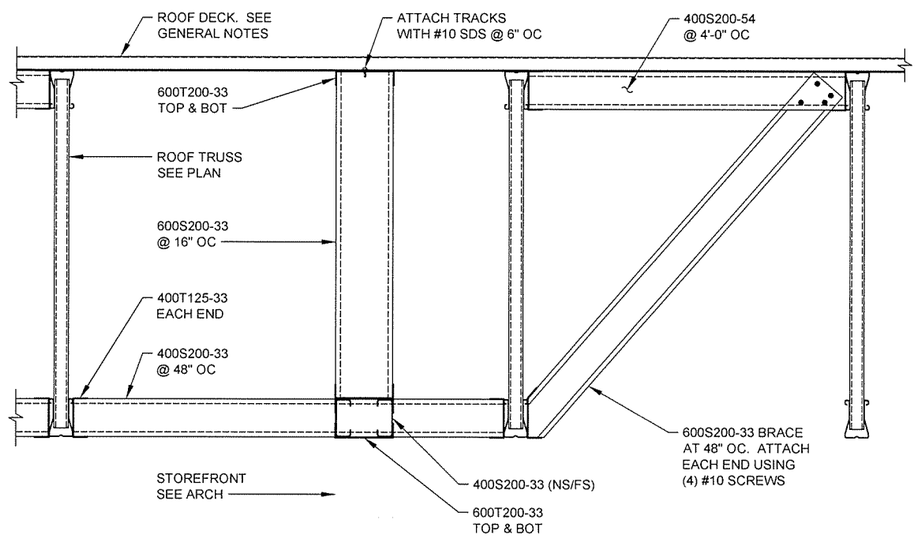


1 SECTION
S-102 S-308 SCALE: 1½" = 1'-0"

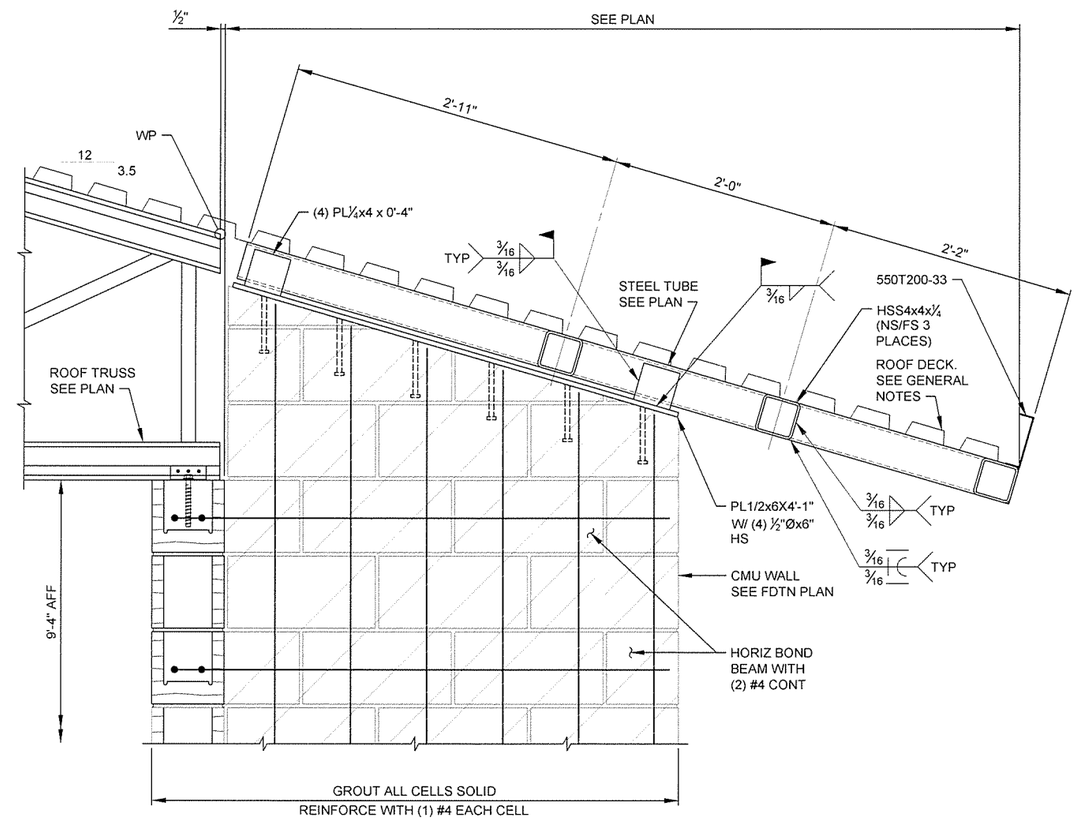


2 SECTION
S-102 S-308 SCALE: 1½" = 1'-0"

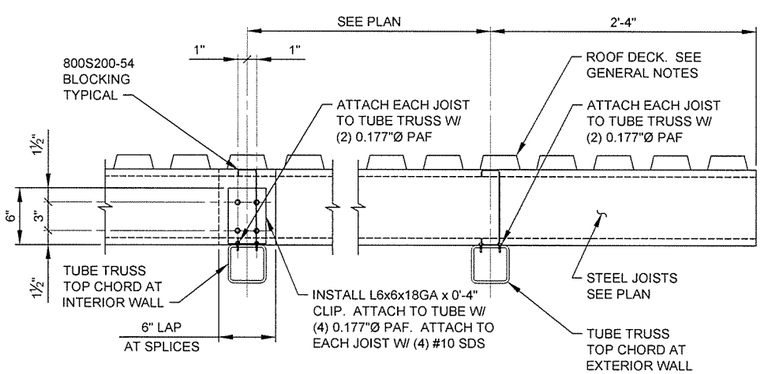


3 SECTION
S-306 S-308 SCALE: 1½" = 1'-0"

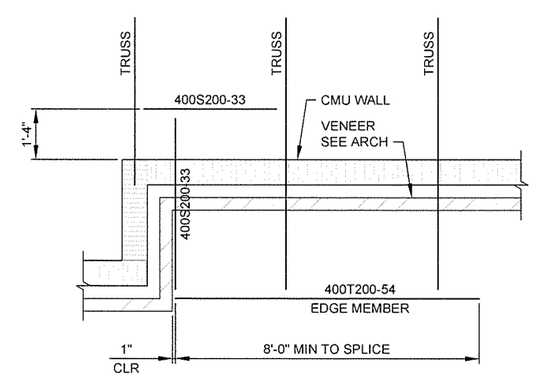


4 SECTION
S-102 S-308 SCALE: ½" = 1'-0"

0 1' 2' 4' 6'
SCALE: ½" = 1'-0"

0 6" 1' 18" 2'
SCALE: 1½" = 1'-0"

GARVER
4701 Northshore Drive
N Little Rock, AR 72118
501-376-3633
www.GarverUSA.com

CERTIFICATE OF AUTHORIZATION
GARVER LLC
No. 766
ARKANSAS ENGINEER

STATE OF ARKANSAS
LICENSED PROFESSIONAL ENGINEER
DAVID TAYLOR CLEMENT
No. 15642
9/30/15

| Symbol | Description | Date | Appr |
|---|---|---|---|
| IFC | ISSUED FOR CONSTRUCTION | 10/1/15 | JRR |

Designed by D. CLEMENT
Drawn by S. BOWEN
Checked by G. ARCHER
Submitted by John T. Williams, III, PE, SE Director, Federal Services
Plot Date: 9/30/15
Plot Scale: 1:1
Drwg Code: -
File Name: AH15VR-S-308.DWG
Job Number 060451
N/A
N/A
N/A

ARKANSAS HIGHWAY AND TRANSPORTATION DEPARTMENT
ARKANSAS TOURIST INFORMATION CENTER
(WHITE RIVER) (S)
JOB 061451

TOURIST INFORMATION CENTER
FRAMING SECTIONS

Sheet Reference Number:
S-308

Sheet 92 of 130

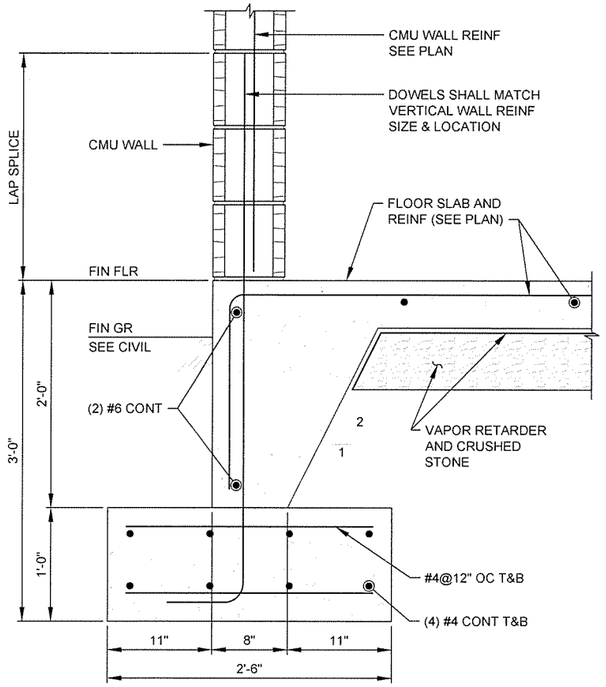


1 SECTION
S-121 S-321 SCALE: 1½" = 1'-0"

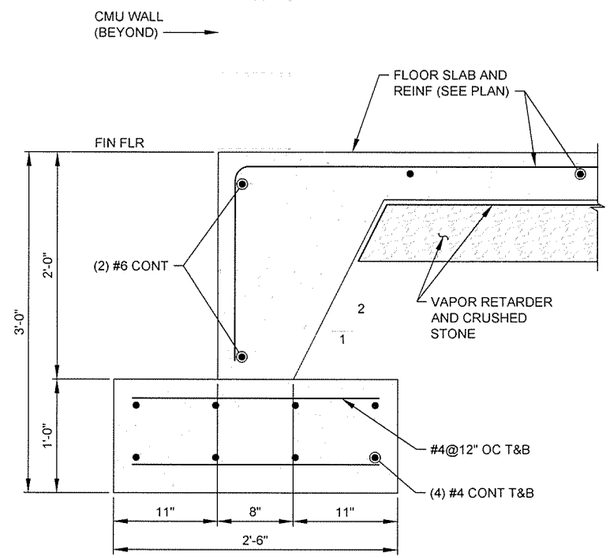


2 SECTION
S-121 S-321 SCALE: 1½" = 1'-0"

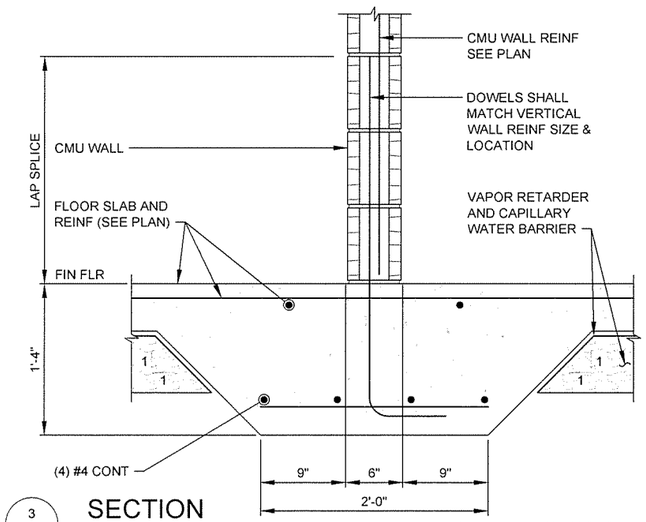


3 SECTION
S-121 S-321 SCALE: 1½" = 1'-0"

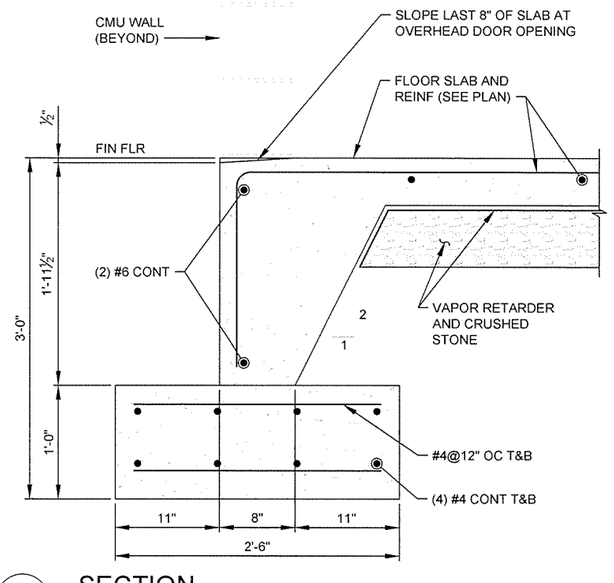


4 SECTION
S-121 S-321 SCALE: 1½" = 1'-0"

0 6" 1' 18" 2'
SCALE: 1½" = 1'-0"

GARVER
4701 Northshore Drive
N Little Rock, AR 72118
501-376-3633
www.GarverUSA.com

CERTIFICATE OF AUTHORIZATION
GARVER LLC
No. 766
ARKANSAS ENGINEER

STATE OF ARKANSAS
LICENSED PROFESSIONAL ENGINEER
No. 15642
DAVID TAYLOR CLEMENT
9/30/15

| IFC Symbol | ISSUED FOR CONSTRUCTION Description | 10/1/15 Date | JRR Appr |
|---|---|---|---|

Job Number 060451
Submitted by John T. Walkins, III, P.E., SE Director, Federal Services
Plot Scale 1:1
Plot Date 9/30/15
Drwg Code -
Designed by D. CLEMENT
Drawn by S. BOWEN
Checked by G. ARCHER
File Name AH15WR-S-321.DWG

ARKANSAS HIGHWAY AND TRANSPORTATION DEPARTMENT
ARKANSAS TOURIST INFORMATION CENTER
(WHITE RIVER) (S)
JOB 061451

MAINTENANCE BUILDING
FOUNDATION SECTIONS

Sheet Reference Number:
S-321

Sheet 93 of 130

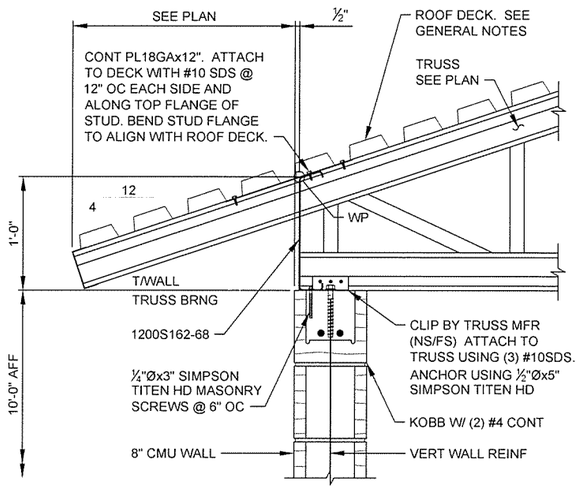


1 SECTION
S-121 S-322 SCALE: 1½" = 1'-0"

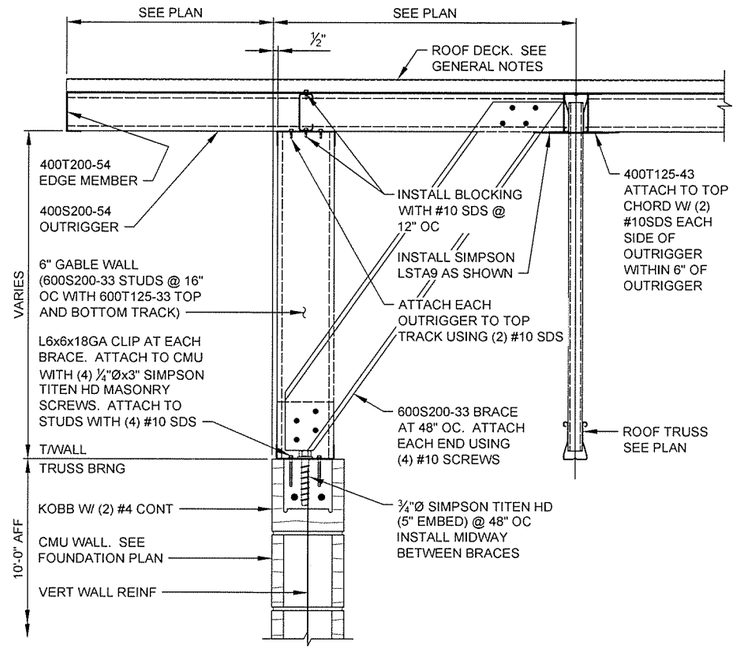


2 SECTION
S-121 S-322 SCALE: 1½" = 1'-0"

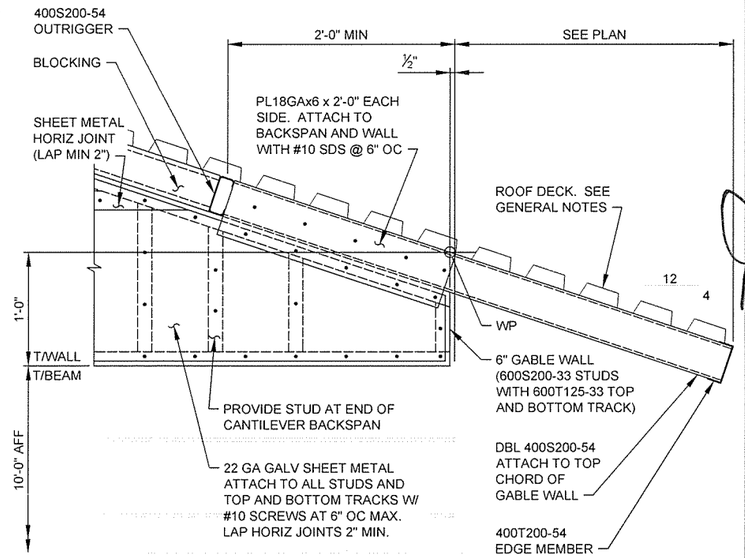


3 SECTION
S-121 S-322 SCALE: 1½" = 1'-0"

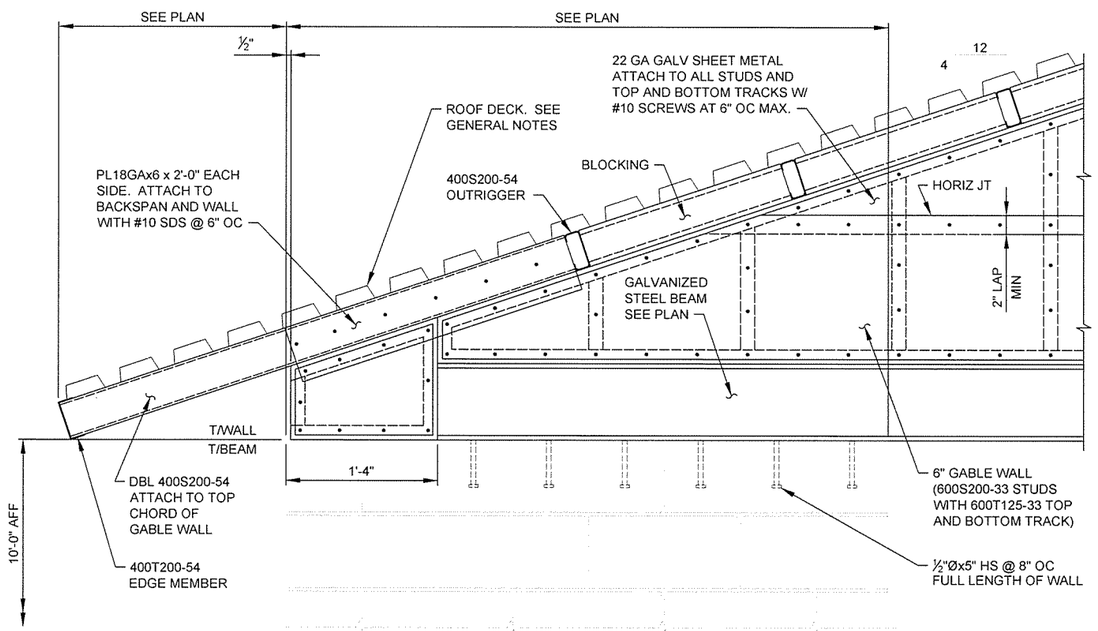


4 SECTION
S-121 S-322 SCALE: 1½" = 1'-0"

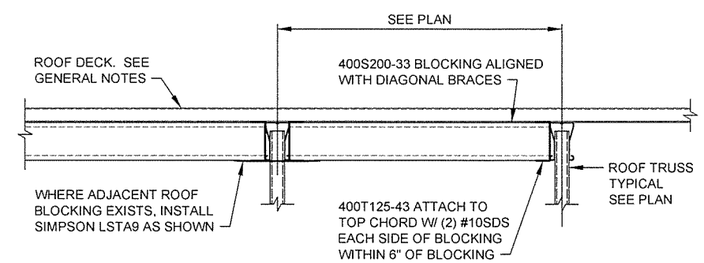


5 SECTION
S-121 S-322 SCALE: 1½" = 1'-0"

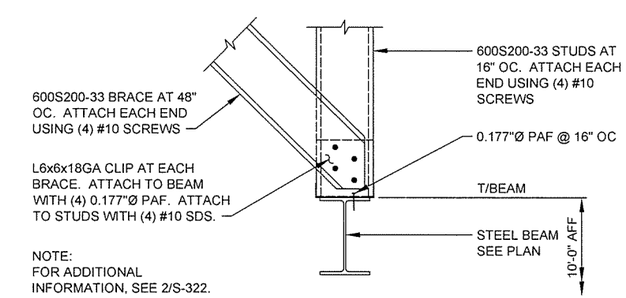


6 SECTION
S-121 S-322 SCALE: 1½" = 1'-0"

0 6" 1' 18" 2'
SCALE: 1½" = 1'-0"


GARVER
4701 Northshore Drive
N Little Rock, AR 72118
501-376-3633
www.GarverUSA.com


CERTIFICATE OF AUTHORIZATION ARKANSAS ENGINEER GARVER LLC No. 766

STATE OF ARKANSAS LICENSED PROFESSIONAL ENGINEER No. 15642 DAVID TAYLOR CLEMENT
9/30/15

| Symbol | Description | Date | Appr. |
|---|---|---|---|
| IFC | ISSUED FOR CONSTRUCTION | 10/1/15 | JRR |

Designed by: D. CLEMENT
Drawn by: S. BOWEN
Plot Date: 9/30/15
Checked by: G. ARCHER
Dwg Code: -
Submitted by: John T. Williams, PE, SE Director, Facilities Services
Plot Scale: 1:1
Job Number: 060451
File Name: AH15VR-S-322.DWG

ARKANSAS HIGHWAY AND TRANSPORTATION DEPARTMENT
ARKANSAS TOURIST INFORMATION CENTER
(WHITE RIVER) (S)
JOB 061451

MAINTENANCE BUILDING
FRAMING SECTIONS

Sheet Reference Number:
S-322

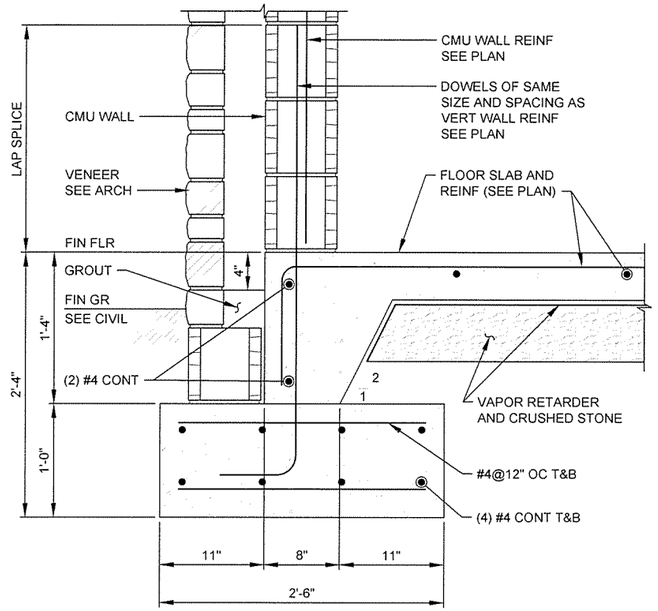


1 SECTION
S-131 S-331 SCALE: 1½" = 1'-0"

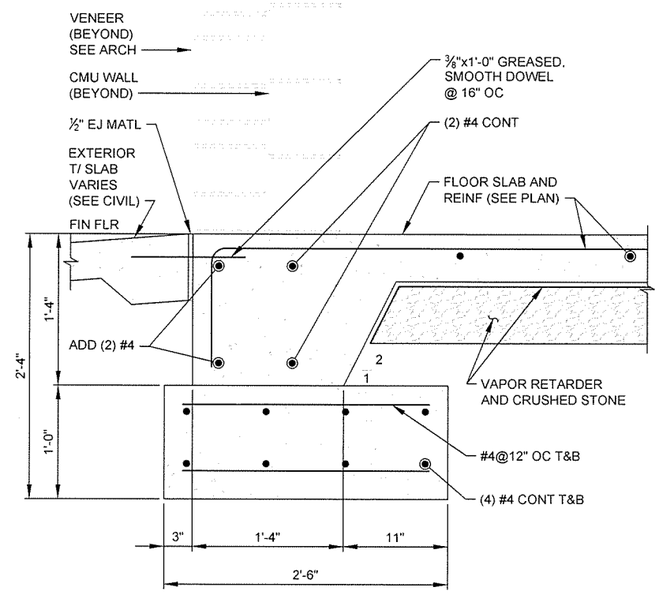


2 SECTION
S-131 S-331 SCALE: 1½" = 1'-0"

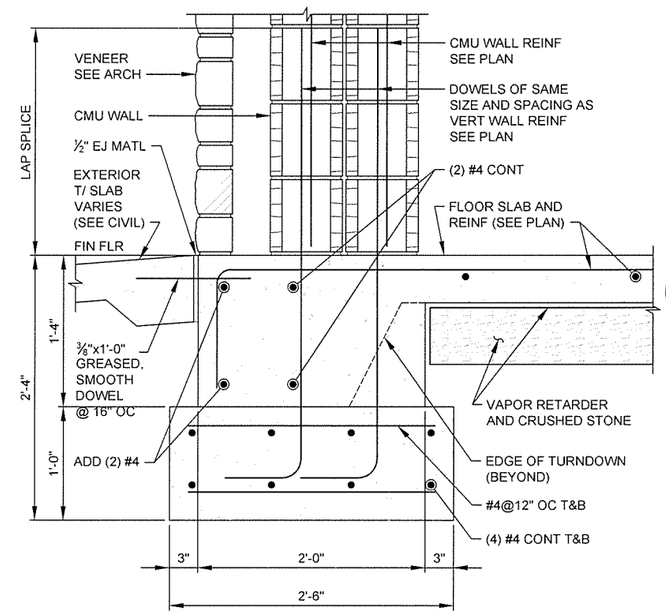


3 SECTION
S-131 S-331 SCALE: 1½" = 1'-0"

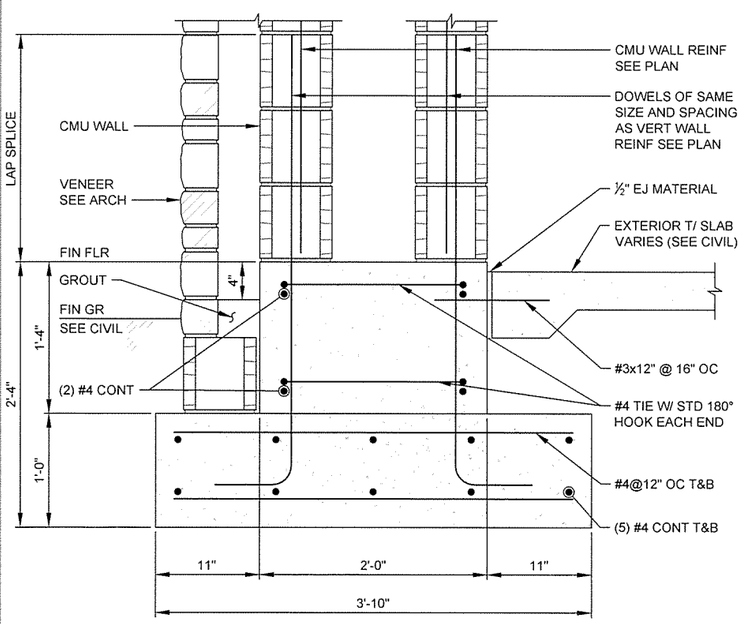


4 SECTION
S-131 S-331 SCALE: 1½" = 1'-0"

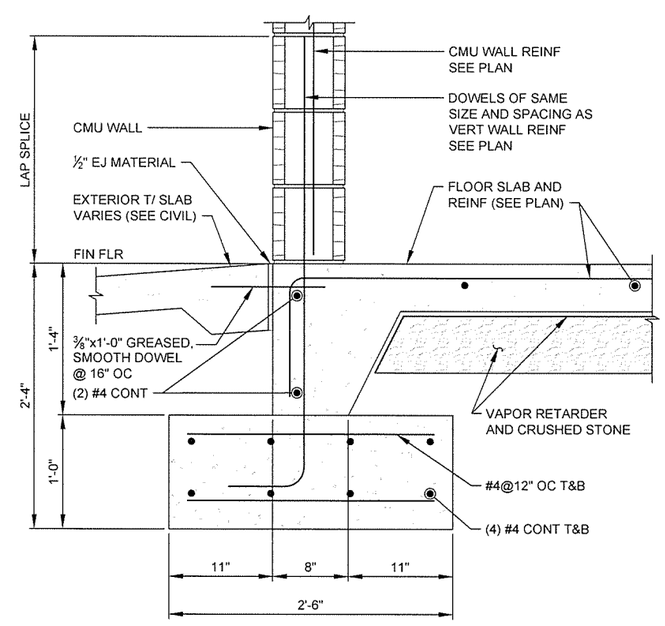


5 SECTION
S-131 S-331 SCALE: 1½" = 1'-0"

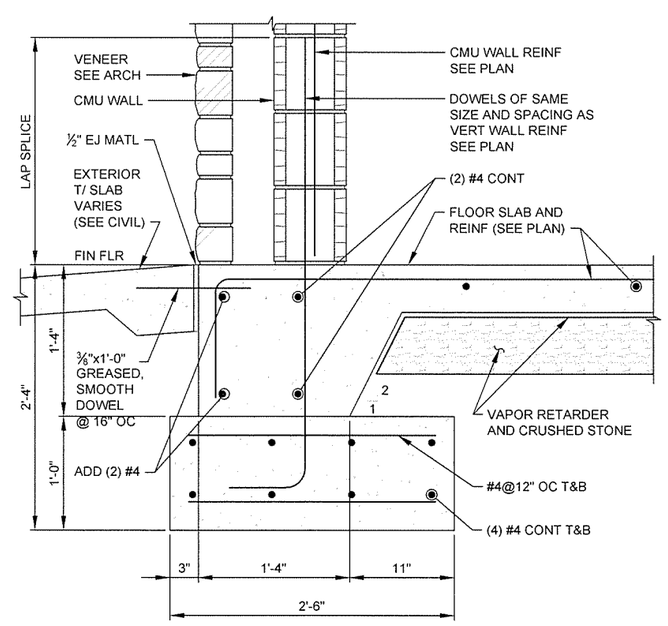


6 SECTION
S-131 S-331 SCALE: 1½" = 1'-0"

0 6" 1' 18" 2'
SCALE: 1½" = 1'-0"

GARVER
4701 Northshore Drive
N Little Rock, AR 72118
501-376-3633
www.GarverUSA.com

CERTIFICATE OF AUTHORIZATION
GARVER LLC
No. 766
ARKANSAS ENGINEER

STATE OF ARKANSAS
LICENSED PROFESSIONAL ENGINEER
No. 15642
DAVID TAYLOR CLEMENT
9/30/15

| Symbol | Description | Date | Appr. |
|---|---|---|---|
| IFC | ISSUED FOR CONSTRUCTION | 10/1/15 | JRR |

Job Number 060451

Submitted by: John T. Williams, P.E., S.E. Director / Consultant

Designed by: D. CLEMENT
Drawn by: S. BOWEN
Plot Date: 9/30/15
Plot Scale: 1:1
Checked by: G. ARCHER
Dwg Code: -
File Name: AHTSVIR-S-331.DWG

ARKANSAS HIGHWAY AND TRANSPORTATION DEPARTMENT
ARKANSAS TOURIST INFORMATION CENTER
(WHITE RIVER) (S)
JOB 061451

TRUCKER-VENDING BUILDING
FOUNDATION SECTIONS

Sheet Reference Number:
S-331

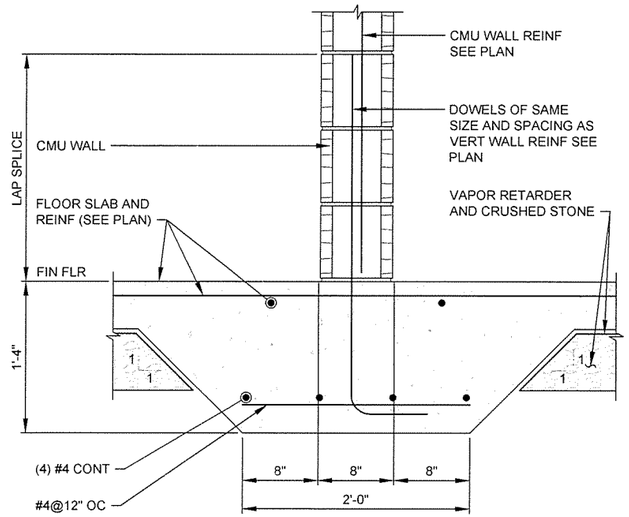


1 SECTION
S-131 S-332 SCALE: 1½" = 1'-0"

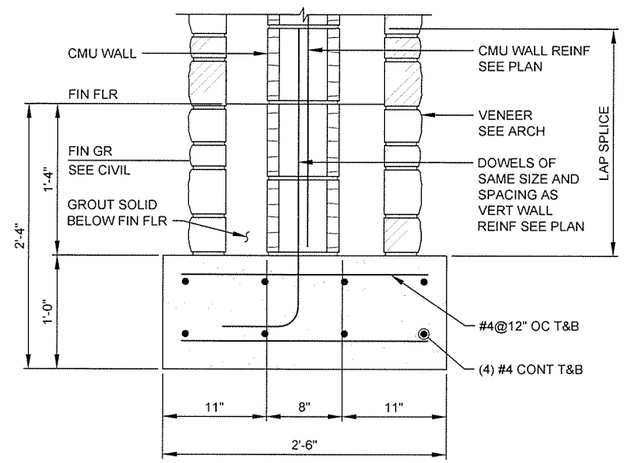


2 SECTION
S-131 S-332 SCALE: 1½" = 1'-0"

0 6" 1' 18" 2'
SCALE: 1½" = 1'-0"

GARVER
4701 Northshore Drive
N Little Rock, AR 72118
501-376-3633
www.GarverUSA.com

CERTIFICATE OF AUTHORIZATION
GARVER LLC
No. 766
ARKANSAS ENGINEER

STATE OF ARKANSAS
LICENSED PROFESSIONAL ENGINEER
No. 15642
DAVID TAYLOR CLEMENT
9/30/15

| IFC Symbol | Description | Date | Appr |
|---|---|---|---|
| | ISSUED FOR CONSTRUCTION | 10/1/15 | JRR |

Designed by: D. CLEMENT
Drawn by: S. BOWEN
Checked by: G. ARCHER
Submitted by: John T. Watkins, III, PE, SE, Director, Federal Services
Plot Date: 9/30/15
Plot Scale: 1:1
Dwg Code: -
File Name: AH15WR-S-332.DWG
Job Number: 060451
N/A
N/A
N/A

ARKANSAS HIGHWAY AND TRANSPORTATION DEPARTMENT
ARKANSAS TOURIST INFORMATION CENTER
(WHITE RIVER) (S)
JOB 061451

TRUCKER-VENDING BUILDING
FOUNDATION SECTIONS

Sheet Reference Number:
S-332

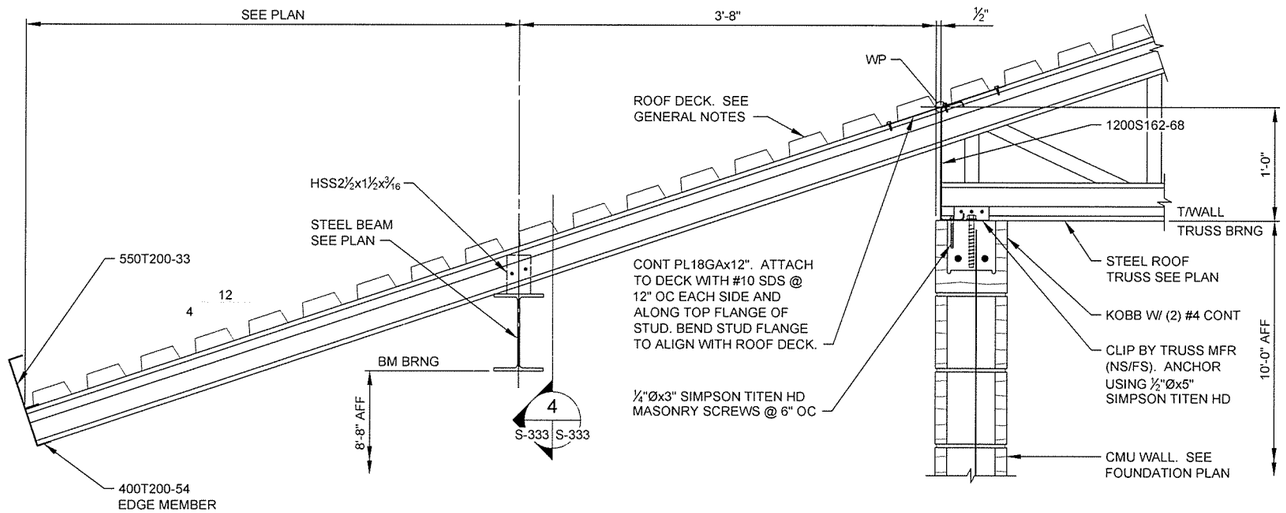


1 SECTION
S-131 S-333 SCALE: 1½" = 1'-0"

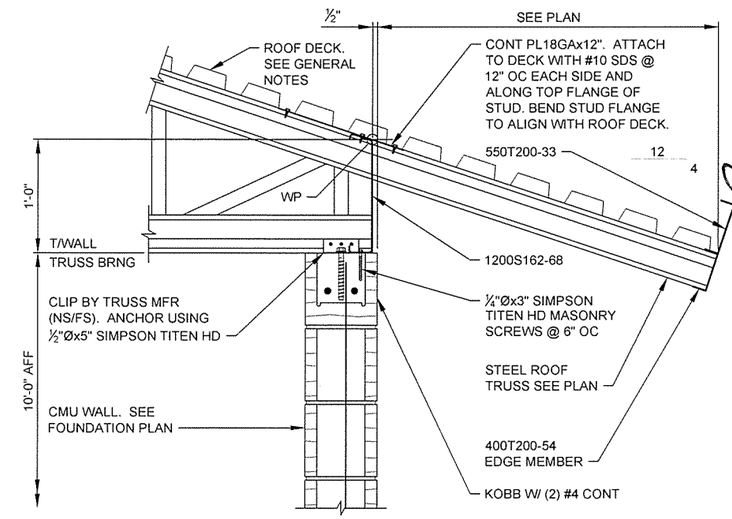


2 SECTION
S-131 S-333 SCALE: 1½" = 1'-0"

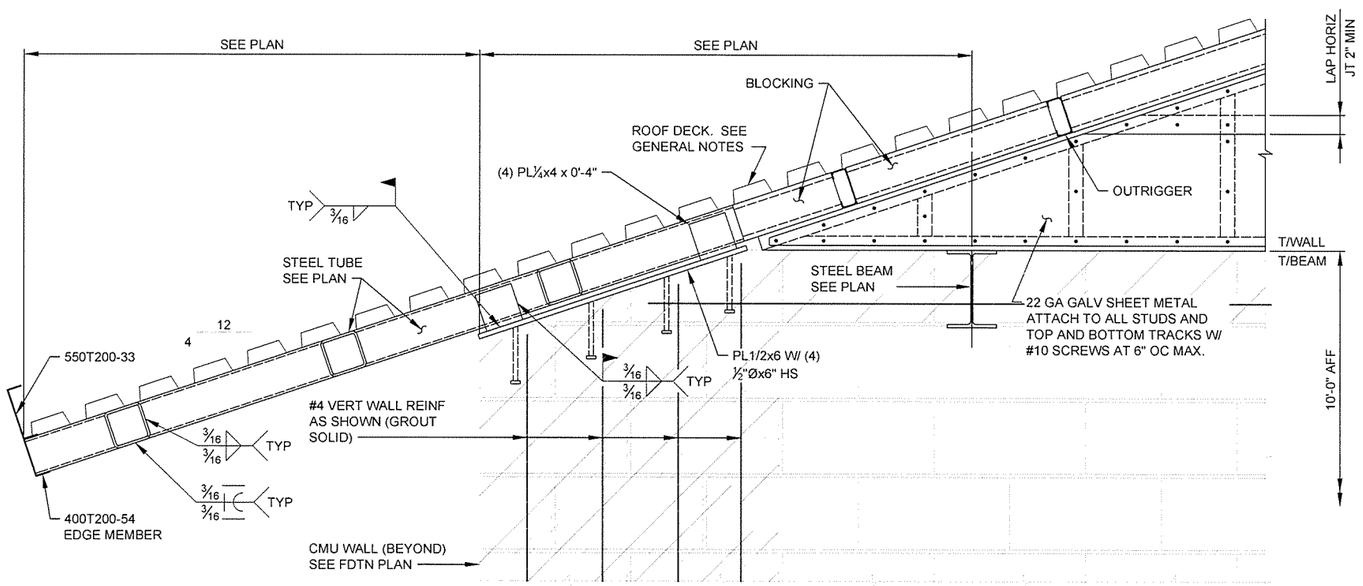


3 SECTION
S-131 S-333 SCALE: 1½" = 1'-0"

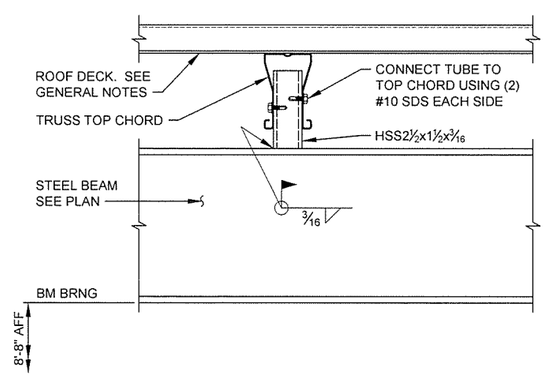


4 SECTION
S-333 S-333 SCALE: 3" = 1'-0"

SCALE: 1½" = 1'-0"
SCALE: 3" = 1'-0"

GARVER
4701 Northshore Drive
N Little Rock, AR 72118
501-376-3633
www.GarverUSA.com

CERTIFICATE OF AUTHORIZATION GARVER LLC No. 766 ARKANSAS ENGINEERING

STATE OF ARKANSAS LICENSED PROFESSIONAL ENGINEER No. 15642 DAVID TAYLOR CLEMENT
9/30/15

| Symbol | Description | Date | Appr. |
|---|---|---|---|
| IFC | ISSUED FOR CONSTRUCTION | 10/1/15 | JRR |

Designed by: D. CLEMENT
Submitted by: John T. Williams III, PE, SE, Director, Federal Services
Job Number: 060451
Drawn by: S. BOWEN
Plot Date: 9/30/15
Plot Scale: 1:1
N/A
Checked by: G. ARCHER
Dwg Code: .
N/A
File Name: AH15WR-S-333.DWG
N/A

ARKANSAS HIGHWAY AND TRANSPORTATION DEPARTMENT
ARKANSAS TOURIST INFORMATION CENTER
(WHITE RIVER) (S)
JOB 061451

TRUCKER-VENDING BUILDING
FRAMING SECTIONS

Sheet Reference Number:
S-333

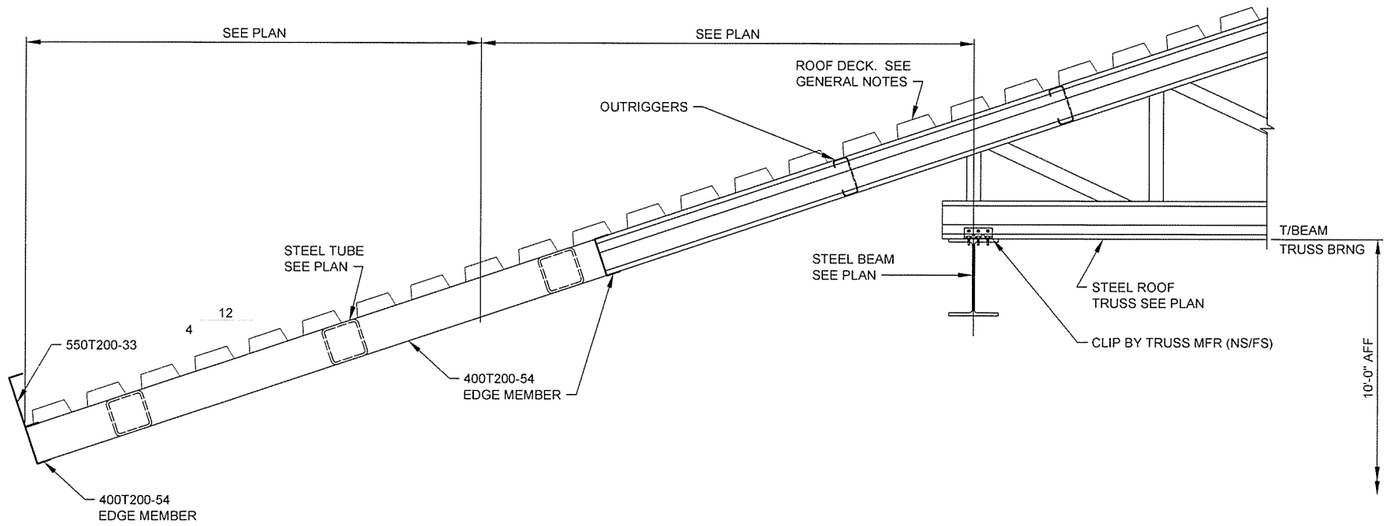


1 SECTION
S-131 S-334 SCALE: 1½" = 1'-0"

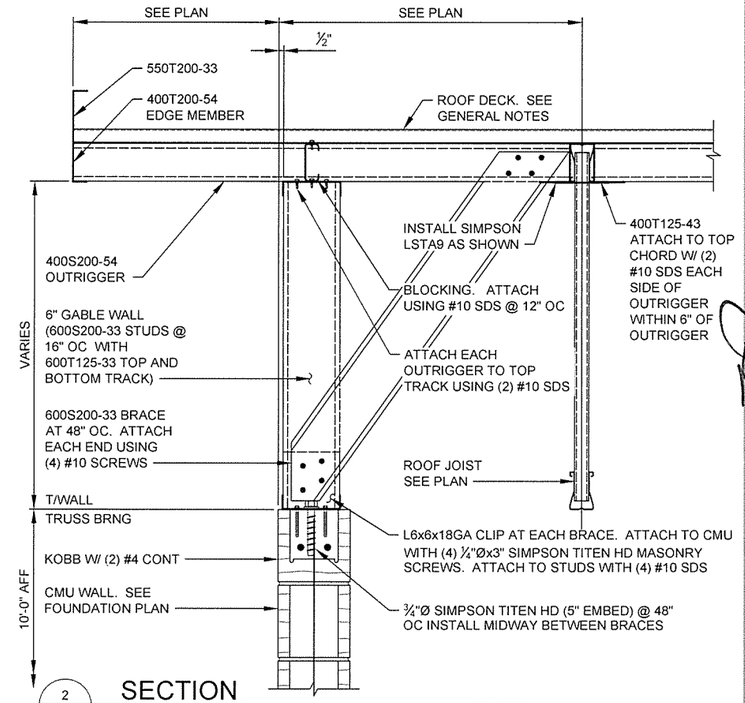


2 SECTION
S-131 S-334 SCALE: 1½" = 1'-0"

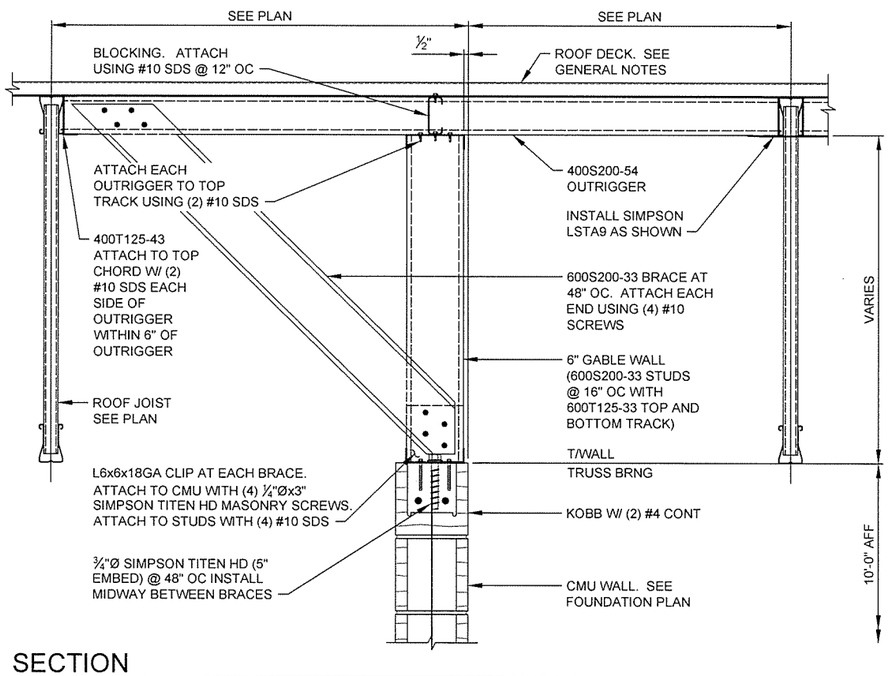


3 SECTION
S-131 S-334 SCALE: 1½" = 1'-0"

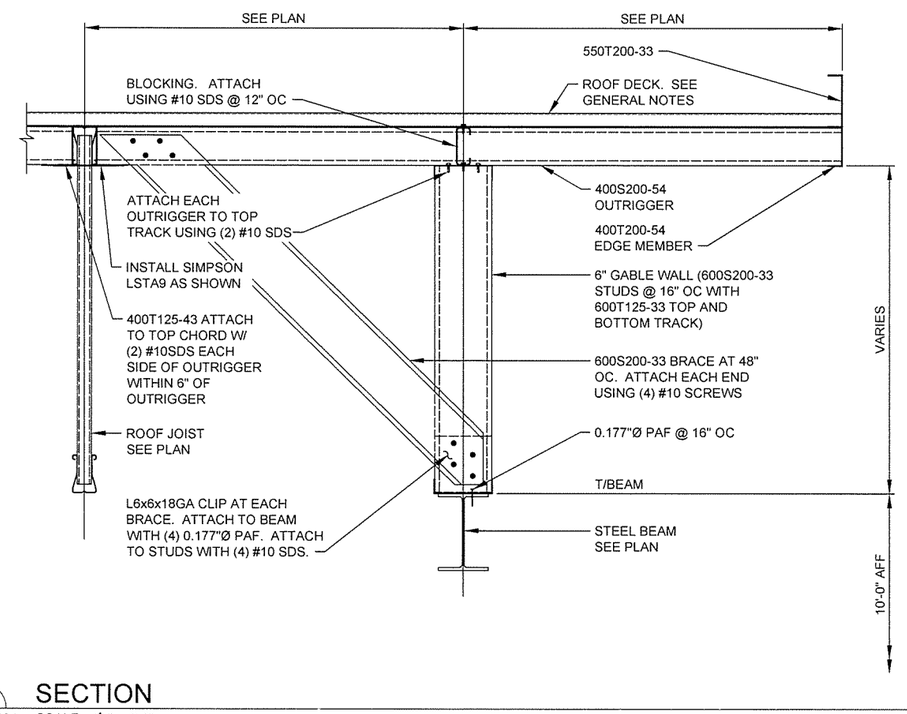


4 SECTION
S-131 S-334 SCALE: 1½" = 1'-0"

0 6" 1' 18" 2'
SCALE: 1½" = 1'-0"

GARVER
4701 Northshore Drive
N Little Rock, AR 72118
501-376-3633
www.GarverUSA.com

CERTIFICATE OF AUTHORIZATION ARKANSAS ENGINEERING GARVER LLC No. 766

STATE OF ARKANSAS LICENSED PROFESSIONAL ENGINEER No. 15642 DAVID TAYLOR CLEMENT
9/30/15

| Symbol | Description | Date | Appr. |
|---|---|---|---|
| IFC | ISSUED FOR CONSTRUCTION | 10/1/15 | JRR |

Designed by D. CLEMENT
Submitted by John T. Vickers, PE, SE Director, Federal Services
Job Number 060451
Drawn by S. BOWEN
Plot Date: 9/30/15
Plot Scale 1:1
N/A
Checked by G. ARCHER
Dwg Code
File Name AH15WR-S-334.DWG

ARKANSAS HIGHWAY AND TRANSPORTATION DEPARTMENT
ARKANSAS TOURIST INFORMATION CENTER (WHITE RIVER) (S)
JOB 061451

TRUCKER-VENDING BUILDING FRAMING SECTIONS

Sheet Reference Number:
S-334

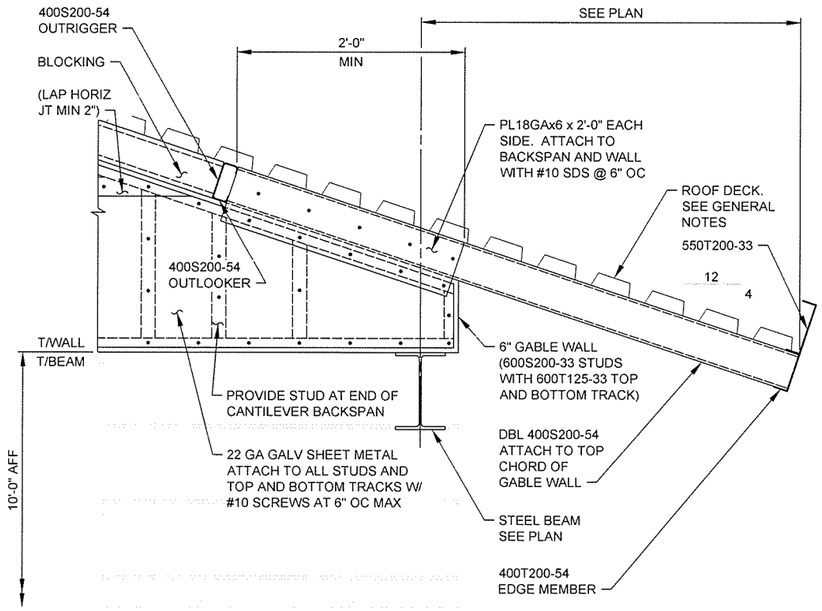


1 SECTION
S-131 S-335 SCALE: 1½" = 1'-0"

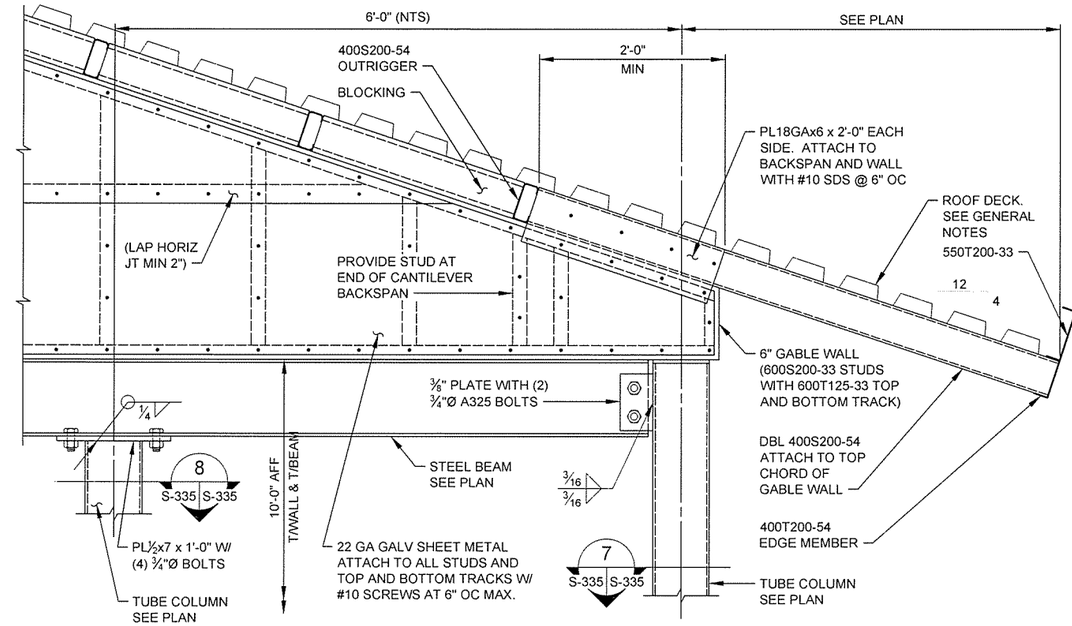


2 SECTION
S-131 S-335 SCALE: 1½" = 1'-0"

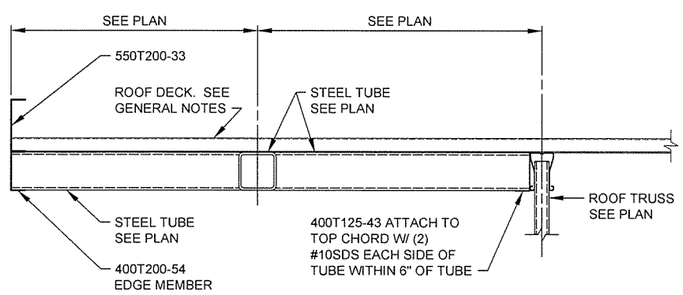


3 SECTION
S-131 S-335 SCALE: 1½" = 1'-0"

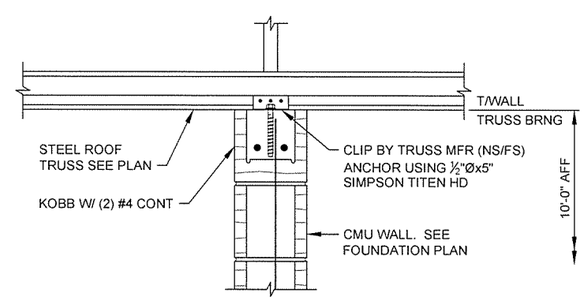


5 SECTION
S-131 S-335 SCALE: 1½" = 1'-0"

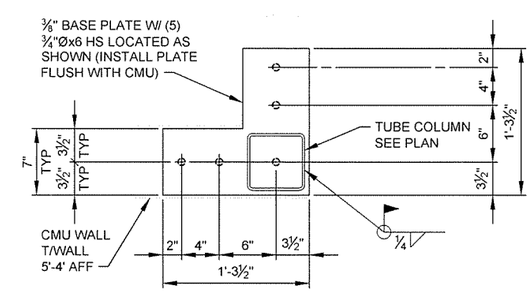


7 SECTION
S-335 S-335 SCALE: 1½" = 1'-0"

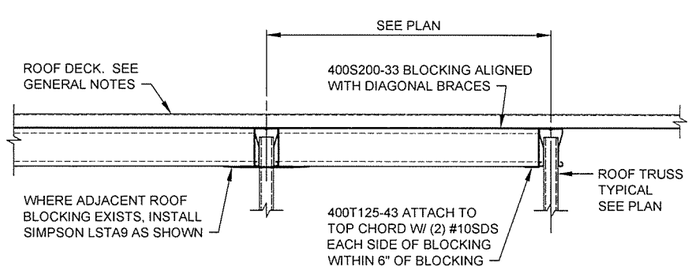


4 SECTION
S-131 S-335 SCALE: 1½" = 1'-0"

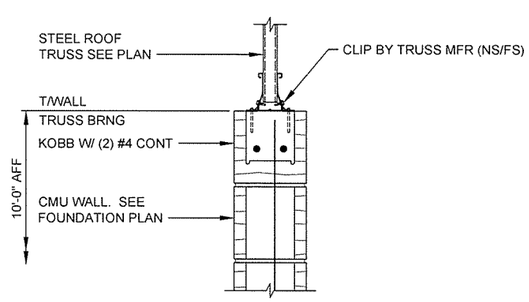


6 SECTION
S-131 S-335 SCALE: 1½" = 1'-0"

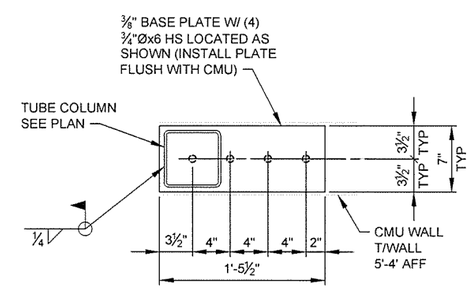


8 SECTION
S-335 S-335 SCALE: 1½" = 1'-0"

0 6" 1' 18" 2'
SCALE: 1½" = 1'-0"


GARVER
4701 Northshore Drive
N Little Rock, AR 72118
501-376-3633
www.GarverUSA.com


CERTIFICATE OF AUTHORIZATION
GARVER LLC
No. 766
ARKANSAS ENGINEER

STATE OF ARKANSAS
LICENSED PROFESSIONAL ENGINEER
No. 15642
DAVID TAYLOR CLEMENT
9/30/15

| IPC Symbol | ISSUED FOR CONSTRUCTION Description | 10/1/15 Date | JRR Appr. |
|---|---|---|---|

| | | | |
|---|---|---|---|
| Job Number 060451 | | | |
| Submitted by John T. Vaikuis, P.E., S.E. Director / Vice President | N/A | N/A | N/A |
| Designed by D. CLEMENT | Plot Date: 9/30/15 | Plot Scale: 1:1 | |
| Drawn by S. BOWEN | Drwg Code: | Checked by G. ARCHER | |
| File Name A415VR-S-335.DWG | | | |

ARKANSAS HIGHWAY AND TRANSPORTATION DEPARTMENT
ARKANSAS TOURIST INFORMATION CENTER
(WHITE RIVER) (S)
JOB 061451

TRUCKER-VENDING BUILDING
FRAMING SECTIONS

Sheet Reference Number:
S-335

Sheet 99 of 130

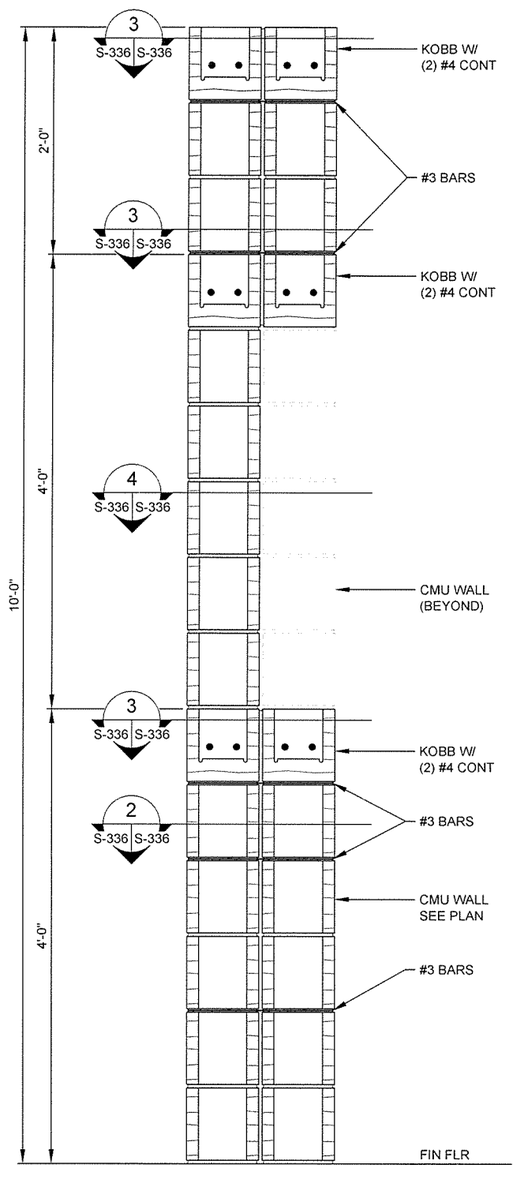


1 S-131 S-336 SECTION
SCALE: 1½" = 1'-0"

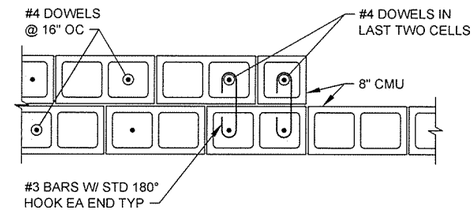


2 S-336 S-336 SECTION
SCALE: 1" = 1'-0"

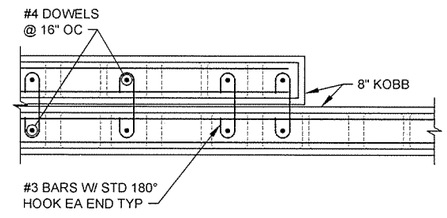


3 S-336 S-336 SECTION
SCALE: 1" = 1'-0"

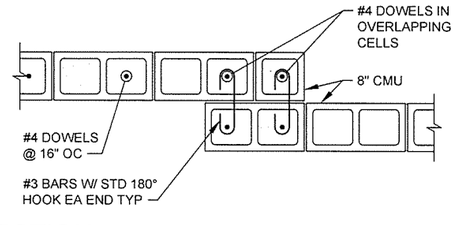


4 S-336 S-336 SECTION
SCALE: 1" = 1'-0"

NOTE:
STRUCTURE ABOVE WALL
OMITTED FOR CLARITY.

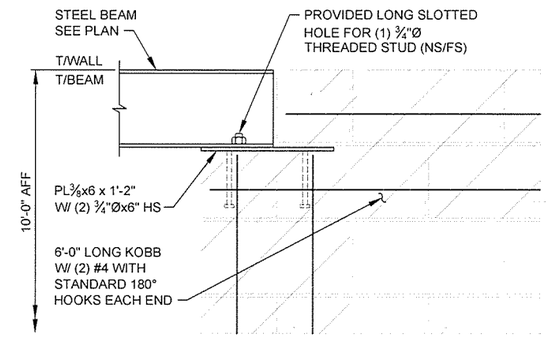


5 S-131 S-336 SECTION
SCALE: 1½" = 1'-0"

0 6" 1' 2' 3'
SCALE: 1" = 1'-0"

0 6" 1' 18" 2'
SCALE: 1½" = 1'-0"

GARVER
4701 Northshore Drive
N Little Rock, AR 72118
501-376-3633
www.GarverUSA.com

CERTIFICATE OF AUTHORIZATION
GARVER LLC
No. 766
ARKANSAS ENGINEER

STATE OF ARKANSAS
LICENSED PROFESSIONAL ENGINEER
No. 15642
DAVID TAYLOR CLEMENT
9/30/15

| IFC Symbol | ISSUED FOR CONSTRUCTION Description | 10/1/15 Date | JRR App. |
|---|---|---|---|

Job Number 060451
Submitted by: John T. Watkins, III, PE, SE Director, Federal Services
Plot Date: 9/30/15
Plot Scale: 1:1
Designed by: D CLEMENT
Drawn by: S. BOWEN
Checked by: G. ARCHER
Drwg Code: -
File Name: AH15WR-S-336 DWG

ARKANSAS HIGHWAY AND TRANSPORTATION DEPARTMENT
ARKANSAS TOURIST INFORMATION CENTER
(WHITE RIVER) (S)
JOB 061451

TRUCKER-VENDING BUILDING
FRAMING SECTIONS

Sheet Reference Number:
S-336

Sheet 100 of 130

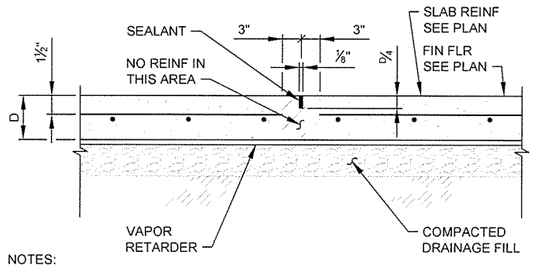


NOTES:
1. SEE FOUNDATION PLAN(S) FOR ADDITIONAL SLAB INFORMATION INCLUDING DEPTH AND REINFORCING.
2. THE SAWCUTTING SHALL BE DONE AS SOON AS THE CONCRETE HAS HARDENED SUFFICIENTLY TO PERMIT CUTTING WITHOUT CHIPPING, SPALLING, OR TEARING, BUT NOT MORE THAN EIGHT HOURS AFTER CASTING.
3. THE CONTRACTOR MAY ELECT TO SAWCUT ANY CONSTRUCTION JOINTS AS SHOWN ON PLAN.

SAWCUT CONTROL JOINT

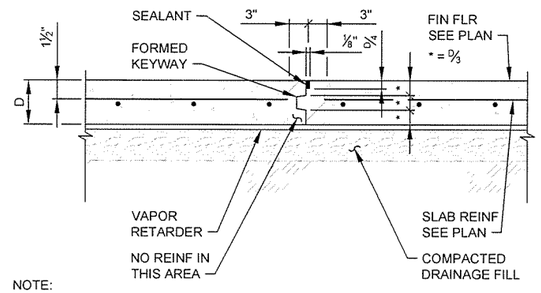


NOTE:
SEE FOUNDATION PLAN(S) FOR ADDITIONAL SLAB INFORMATION INCLUDING DEPTH AND REINFORCING.

CONSTRUCTION JOINT

1 / S-501 DETAIL - TYPICAL SLAB JOINTS
SCALE: NONE

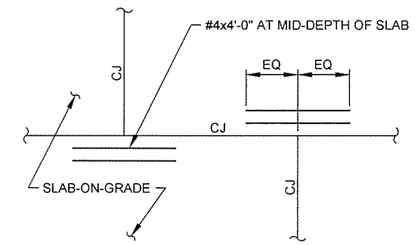


2 / S-501 DETAIL - REINF AT CONSTRUCTION JOINT
SCALE: NONE

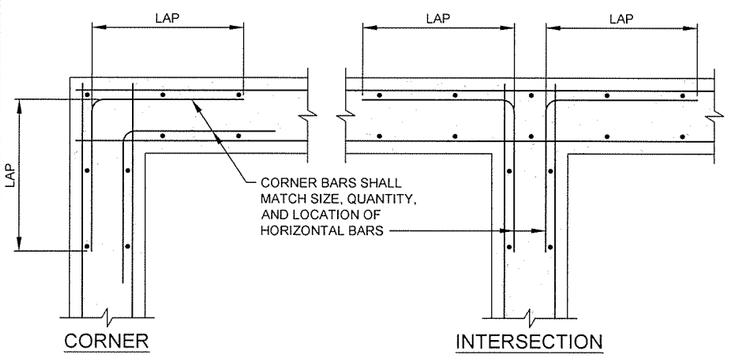


3 / S-501 DETAIL - FOOTING REINFORCING
SCALE: NONE

GARVER
4701 Northshore Drive
N Little Rock, AR 72118
501-376-3633
www.GarverUSA.com

CERTIFICATE OF AUTHORIZATION
GARVER LLC
No. 766
ARKANSAS ENGINEER

STATE OF ARKANSAS
LICENSED PROFESSIONAL ENGINEER
No. 15642
DAVID TAYLOR CLEMENT
9/30/15

| Symbol | Description | Date | Appr. |
|---|---|---|---|
| IFC | ISSUED FOR CONSTRUCTION | 10/1/15 | JRR |

Job Number: 060451
Submitted by: John T Watkins, III, PE, SE, Director, Federal Services
Designed by: D CLEMENT
Drawn by: S BOWEN
Plot Date: 9/30/15
Plot Scale: 1:1
Checked by: G. ARCHER
Dwg Code: -
File Name: AH15WR-S-501.DWG

ARKANSAS HIGHWAY AND TRANSPORTATION DEPARTMENT
ARKANSAS TOURIST INFORMATION CENTER
(WHITE RIVER) (S)
JOB 061451

TYPICAL DETAILS

Sheet Reference Number:
S-501

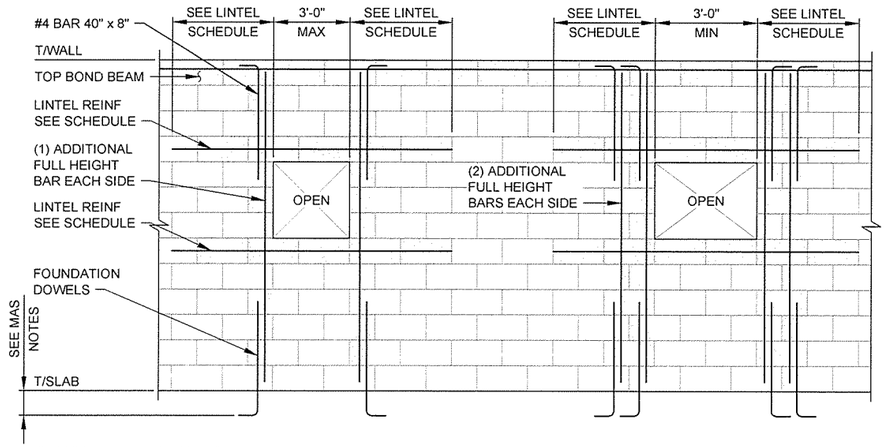


1 S-502 DETAIL - TYPICAL CMU WALL REINF AT OPENINGS

SCALE: NONE

| MASONRY LINTEL SCHEDULE | | | | | |
|---|---|---|---|---|---|
| MARK | BEARING LENGTH | NOMINAL DEPTH | TOP BARS | BOTTOM BARS | CLEAR SPAN (S) |
| L1 | 2'-0" | 8" | NONE | (2)#5 | 0'-0" < S < 3'-4" |
| L2 | 2'-0" | 16" | NONE | (2)#5 | 3'-4" ≤ S < 6'-8" |
| L3 | 2'-0" | 24" | (2)#5 | (2)#5 | 6'-8" ≤ S ≤ 10'-0" |

| LOOSE LINTEL SCHEDULE | | | |
|---|---|---|---|
| MARK | BEARING LENGTH | MATERIAL | CLEAR SPAN (S) |
| L4 | 8" MIN | L4x4x¼ | 0'-0" < S ≤ 5'-6" |
| L5 | 8" MIN | L4x4x⅜ | 5'-6" < S ≤ 8'-0" |

NOTES:
1. SEE ARCHITECTURE AND MECHANICAL DRAWINGS FOR OPENING SIZES AND LOCATIONS.
2. USE SOLID BOTTOM BOND BEAMS AT OPENING HEADS ONLY, USE KNOCK-OUT BOND BEAMS ELSEWHERE.

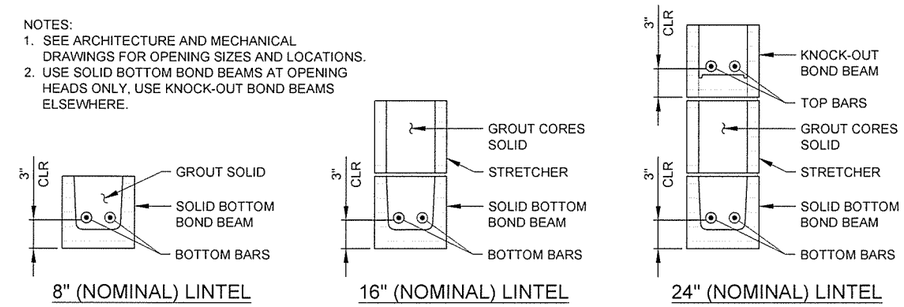


2 S-502 DETAIL - TYPICAL MASONRY LINTELS

SCALE: NONE

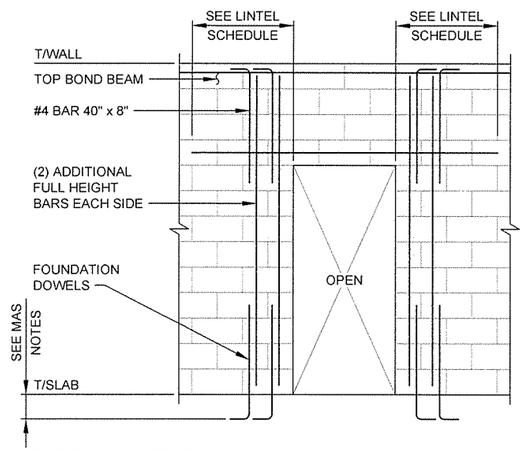


3 S-502 DETAIL - TYP CMU WALL REINF AT DOORS

SCALE: NONE

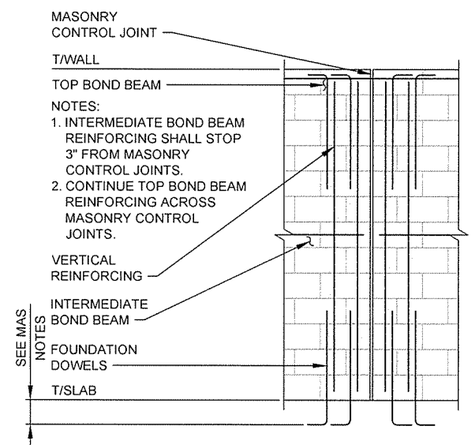


4 S-502 DETAIL - TYP MASONRY CONTROL JT (WCJ)

SCALE: NONE

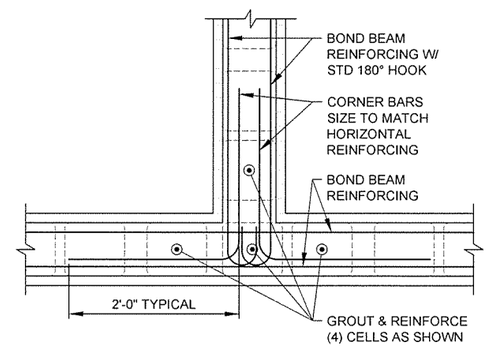


5 S-502 DETAIL - TYPICAL CMU WALL REINFORCING AT INTERSECTIONS

SCALE: NONE

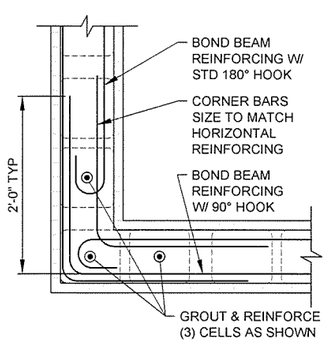


6 S-502 DET - TYP CMU WALL REINF AT CORNERS

SCALE: NONE

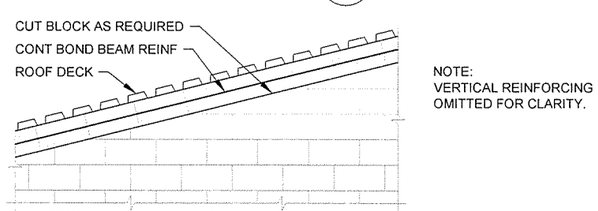


7 S-502 DETAIL - TYPICAL SLOPED BOND BEAM

SCALE: NONE

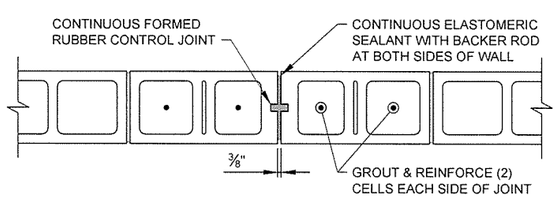


8 S-502 DETAIL - TYP MASONRY CONTROL JOINT (WCJ)

SCALE: NONE

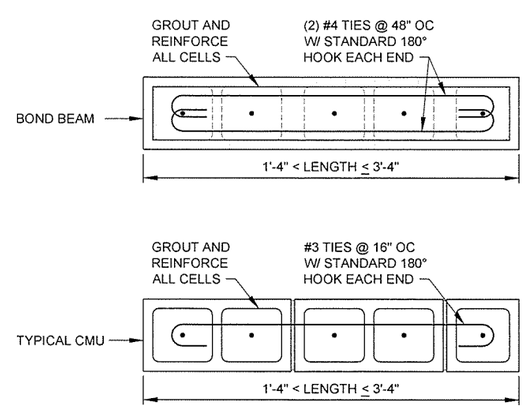


9 S-502 DETAIL - TYP CMU WALL REINF AT PIERS

SCALE: NONE

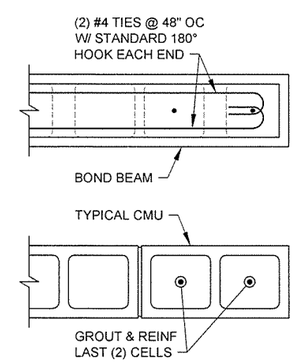


10 S-502 DETAIL - TYPICAL CMU WALL REINF AT DEAD ENDS

SCALE: NONE


GARVER
4701 Northshore Drive
N Little Rock, AR 72118
501-376-3633
www.GarverUSA.com


CERTIFICATE OF AUTHORIZATION GARVER LLC No. 766 ARKANSAS ENGINEER

STATE OF ARKANSAS LICENSED PROFESSIONAL ENGINEER No. 16642 DAVID TAYLOR CLEMENT

9/30/15

| Symbol | Description | Date | Appr. |
|---|---|---|---|
| IFC | ISSUED FOR CONSTRUCTION | 10/1/15 | JRR |

Job Number 060-451

Submitted by: John T. Watkins, III, PE, SE, Director, Federal Services

Designed by: D. CLEMENT

Plot Date: 9/30/15

Plot Scale: 1:1

Drawn by: S. BOWEN

Drwg Code: -

Checked by: G. ARCHER

File Name: AHTSWR-S-502.DWG

ARKANSAS HIGHWAY AND TRANSPORTATION DEPARTMENT
ARKANSAS TOURIST INFORMATION CENTER
(WHITE RIVER) (S)
JOB 061451

TYPICAL DETAILS

Sheet Reference Number:

S-502

## LEGEND

- MECHANICAL EQUIPMENT (TYP.)
- CEILING SUPPLY AIR DIFFUSER (TYP.)
- CEILING RETURN AIR GRILLE (TYP.)
- CEILING EXHAUST AIR GRILLE (TYP.)
- BALANCING DAMPER W/ LOCKING QUADRANT
- SD-1 / 10x6 / 160 — AIR DEVICE - DEVICE TYPE, NECK SIZE, CFM
- T — THERMOSTAT, MOUNTED 54" AFF
- TS HS — TEMPERATURE AND HUMIDITY SENSORS, MOUNTED 54" AFF.

## GENERAL NOTES

1. COORDINATE THE WORK OF THIS SHEET WITH ALL OTHER TRADES PRIOR TO STARTING CONSTRUCTION.
2. ALL LISTED ELEVATIONS ARE TO THE BOTTOM OF DUCT/DEVICE/EQUIPMENT UNLESS OTHERWISE NOTED.
3. REFER TO THE STRUCTURAL DRAWINGS AND SPECIFICATIONS FOR INFORMATION ON THE SEISMIC CLASSIFICATION OF THIS BUILDING. CONTRACTOR IS RESPONSIBLE TO PROVIDE SEISMIC BRACING AS REQUIRED FOR THE MECHANICAL SYSTEMS ON THIS PROJECT. ALL SEISMIC RESTRAINTS SHALL BE DESIGNED AND STAMPED BY A REGISTERED PROFESSIONAL STRUCTURAL ENGINEER.
4. SEE SHEET A-302 FOR EXACT LOCATIONS OF WALL DIFFUSERS IN LOBBY 101.
5. SEE SHEET A-401 FOR EXACT LOCATION OF WALL DIFFUSERS IN RESTROOM AREAS.

## KEYED NOTES

1. ERV UNIT SUSPENDED TIGHT TO BOTTOM OF TRUSSES.
2. 14/12 EXHAUST DUCT UP THROUGH ROOF TO ROOF HOOD..
3. 14/12" INTAKE DUCT UP THROUGH ROOF TO ROOF HOOD..
4. PROVIDE 6" PIP HOUSEKEEPING PAD AND ANCHOR CONDENSING UNIT TO PAD WITH EPOXIED-IN BOLTS AT EACH CORNER. FIELD ROUTE CONDENSATE LINES TO INDOOR UNITS. LINES ROUTED THROUGH WALLS OR UNDER SLABS SHALL BE PROVIDED WITH A 4" PVC SLEEVE SEALED WATERTIGHT AT BOTH ENDS.
5. COMPUTER ROOM UNIT MOUNTED ON WALL 7' AFF. PROVIDE WIRELESS REMOTE CONTROL IN LOCKING ENCLOSURE AS INDICATED.
6. REMOTE MOUNTED TEMPERATURE AND HUMIDITY SENSOR. CONNECT TO THERMOSTAT MOUNTED IN MECHANICAL CHASE.
7. AHU MOUNTED ON PRE-FAB RETURN PLENUM BASE W/ FILTER RACK. ROUTE CONDENSATE TO FLOOR DRAIN PROVIDED.
8. UNIT HEATER MOUNTED WITH BOTTOM 8' AFF
9. CEILING FAN SUSPENDED FROM ROOF STRUCTURE PER MANUFACTURER'S REQUIREMENTS. FAN SHALL BE MOUNTED 12'-8" AFF.
10. PROVIDE CHAIN LINK ENCLOSURE AROUND HEAT PUMP UNITS WITH LOCKING GATE AND CHAIN LINK TOP. REFER TO AHTD STANDARD DRAWING WF-3 FOR FENCE CONSTRUCTION DETAILS.
11. COORDINATE PLACEMENT OF CONDENSING UNITS/PADS WITH ELECTRICAL AND WATER UTILITIES IN THIS AREA. UNITS SHALL NOT OBSTRUCT ELECTRICAL PANEL FOR A MINIMUM OF 3' IN FRONT OF PANEL, AND SHALL NOT BE SET ON TOP OF BURIED ELECTRICAL CONDUIT OR WATER LINES/VALVES.

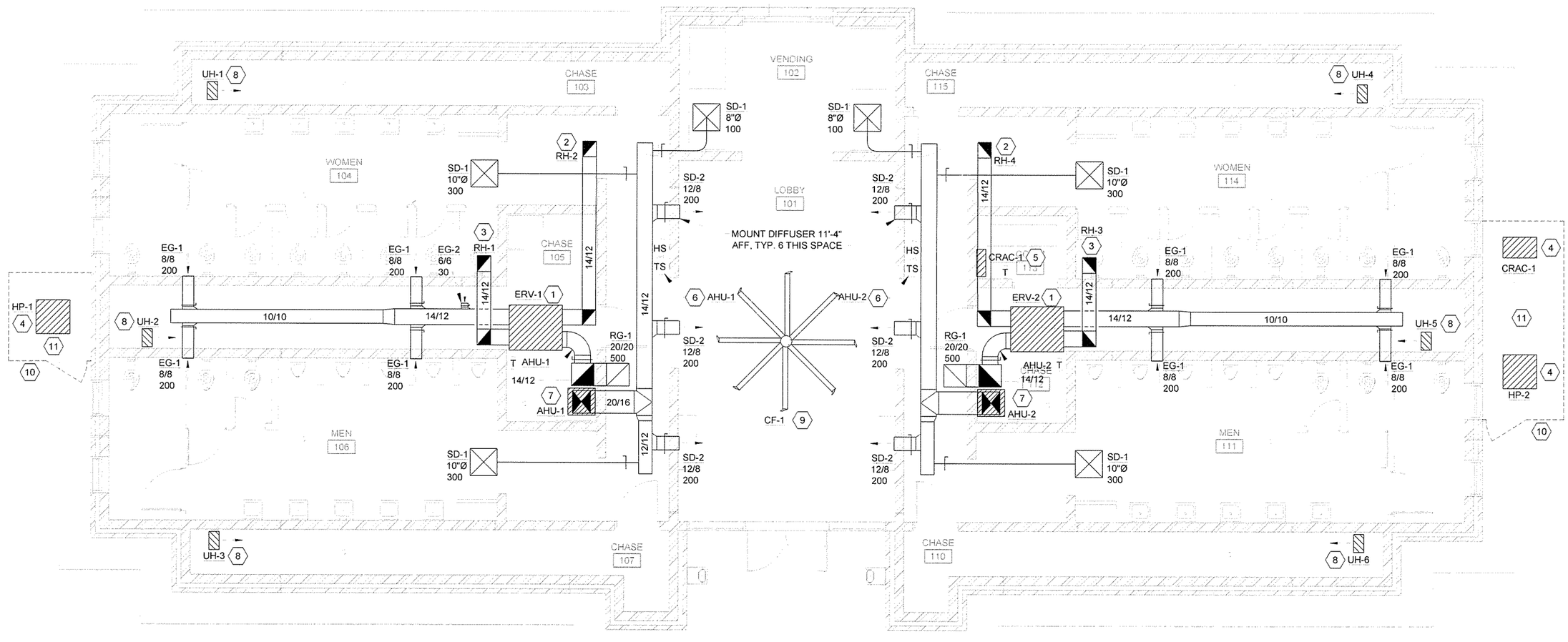


PROJECT NORTH

1 / M-101 FLOOR PLAN

SCALE: 1/4" = 1'-0"

0 2' 4' 8' 12'

SCALE: 1/4" = 1'-0"


GARVER
4701 Northshore Drive
N Little Rock, AR 72118
501-376-3633
www.GarverUSA.com


CERTIFICATE OF AUTHORIZATION GARVER LLC No. 766 ARKANSAS ENGINEER

STATE OF ARKANSAS LICENSED PROFESSIONAL ENGINEER No. 11074 LEE E. SUGGS 9/30/15

| IPC Symbol | ISSUED FOR CONSTRUCTION Description | 10/1/15 Date | JRR Appr. |
|---|---|---|---|

| | | | |
|---|---|---|---|
| Designed by L SUGGS | Submitted by John T Vasteen III, PE, SE Director, Federal Services | Job Number 060451 | |
| Drawn by L SUGGS | Plot Date: 9/29/15 | Plot Scale: 1:1 | N/A |
| Checked by B BRADSHAW | Dwg Code - | N/A | N/A |
| File Name AH15WR-M-101.DWG | | N/A | N/A |

ARKANSAS HIGHWAY AND TRANSPORTATION DEPARTMENT
ARKANSAS TOURIST INFORMATION CENTER
(WHITE RIVER) (S)
JOB 061451

TOURIST INFORMATION CENTER
MECHANICAL PLAN

Sheet Reference Number:

M-101

Sheet 103 of 130

## EQUIPMENT SCHEDULE

UH-1 AND UH-2
REZNOR EGHB ELECTRIC UNIT HEATER OR EQUAL, 10 KW, 700 CFM, 240 V. PROVIDE WITH WALL MOUNTING BRACKET AND MOUNT WITH TOP OF UNIT 12" BELOW CEILING. PROVIDE WITH WALL MOUNTED THERMOSTAT.

EF-1
GREENHECK MODEL SE1-12-432 PROPELLER EXHAUST FAN OR EQUAL, 1200 CFM AT 0.25" ESP. 120 V, 1/8 HP. 16" SQUARE WALL OPENING. PROVIDE WITH FLUSH EXTERIOR GRAVITY BACKDRAFT DAMPER AND INTERIOR OSHA GUARD.

LVR-1
RUSKIN MODEL ELC6375DAX COMBINATION LOUVER OR EQUAL, 24"X32" SIZE, 1.94 SQ. FT. FREE AREA, WITH INTEGRAL DAMPER AND LINKAGE, AND BIRDSCREEN KYNAR FINISH TO MATCH BUILDING COLOR. PROVIDE 120 VOLT DAMPER ACTUATOR AND INTERLOCK W/ EF-1.

## CONTROL NOTES

EF-1:
1. FAN SHALL BE CONTROLLED BY AN ADJUSTABLE OPEN ON RISE THERMOSTAT. FAN SHALL ENERGIZE WHEN THE SPACE TEMPERATURE RISES ABOVE THE THERMOSTAT SETPOINT. THERMOSTAT SHALL BE ADJUSTABLE FROM 55°F TO 85°F.
2. FAN SHALL ALSO BE PROVIDED WITH A MANUAL OVERRIDE TO ENERGIZE THE FAN MANUALLY WHEN ENGAGED.
3. FAN SHALL BE INTERLOCKED WITH LVR-1. LVR-1 SHALL BE OPEN WHEN EF-1 IS ENERGIZED AND CLOSE WHEN EF-1 IS DE-ENERGIZED.

UH-1
1. UNIT FAN AND HEATING COIL SHALL ENGAGE WHEN THE WALL MOUNTED THERMOSTAT CALLS FOR HEATING.

## GENERAL NOTES

1. COORDINATE THE WORK OF THIS SHEET WITH ALL OTHER TRADES PRIOR TO STARTING CONSTRUCTION.
2. ALL LISTED ELEVATIONS ARE TO THE BOTTOM OF DUCT/DEVICE/EQUIPMENT UNLESS OTHERWISE NOTED.
3. REFER TO THE STRUCTURAL DRAWINGS AND SPECIFICATIONS FOR INFORMATION ON THE SEISMIC CLASSIFICATION OF THIS BUILDING. CONTRACTOR IS RESPONSIBLE TO PROVIDE SEISMIC BRACING AS REQUIRED FOR THE MECHANICAL SYSTEMS ON THIS PROJECT. ALL SEISMIC RESTRAINTS SHALL BE DESIGNED AND STAMPED BY A REGISTERED PROFESSIONAL STRUCTURAL ENGINEER.

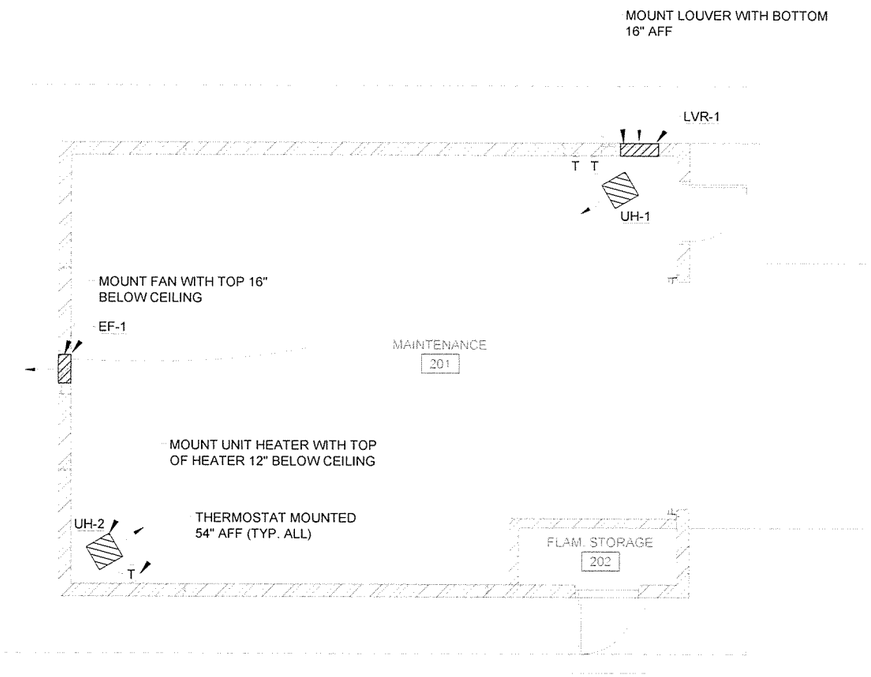


## KEYED NOTES

## LEGEND

- MECHANICAL EQUIPMENT (TYP.)
- CEILING SUPPLY AIR DIFFUSER (TYP.)
- CEILING RETURN AIR GRILLE (TYP.)
- CEILING EXHAUST AIR GRILLE (TYP.)
- BALANCING DAMPER W/ LOCKING QUADRANT
- SD-1 / 10x6 / 160 — AIR DEVICE - DEVICE TYPE, NECK SIZE, CFM
- T — THERMOSTAT, MOUNTED 54" AFF

PROJECT NORTH

1 / M-121

## FLOOR PLAN

SCALE: 1/4" = 1'-0"

0 2' 4' 8' 12'
SCALE: 1/4" = 1'-0"


GARVER
4701 Northshore Drive
N Little Rock, AR 72118
501-376-3633
www.GarverUSA.com


CERTIFICATE OF AUTHORIZATION
GARVER LLC
No. 766
ARKANSAS ENGINEER

STATE OF ARKANSAS
LICENSED PROFESSIONAL ENGINEER
No. 11074
LEE E. SUGGS
9/30/15

| Symbol | Description | Date | Appr. |
|---|---|---|---|
| IFC | ISSUED FOR CONSTRUCTION | 10/1/15 | JRR |

Job Number: 060451
Submitted by: John T Walker III, PE, SE, Director, Federal Services
Plot Date: 9/29/15
Plot Scale: 1:1
Drwg Code: -
Checked by: B. BRADSHAW
File Name: AH15WR-M-121.DWG
Designed by: L. SUGGS
Drawn by: L. SUGGS

ARKANSAS HIGHWAY AND TRANSPORTATION DEPARTMENT
ARKANSAS TOURIST INFORMATION CENTER
(WHITE RIVER) (S)
JOB 061451

MAINTENANCE BUILDING
MECHANICAL PLAN

Sheet Reference Number:
M-121

## EQUIPMENT SCHEDULE

AHU-1
TRANE TAM4-18 OR EQUAL SPLIT SYSTEM AIR HANDLING UNIT WITH EMERGENCY STRIP HEATING. 550 CFM AIRFLOW AT 0.5" WG ESP, 550 CFM OSA, COOLING CAPACITY 12.0MBH SENSIBLE, 6.9MBH LATENT AT 82F DB/97F WB ENTERING CONDITIONS, HEATING CAPACITY 17.7MBH AT 17F. 3.8 KW ELECTRIC HEATER. FILTER RACK WITH MERV 8 1" FILTER. SINGLE POINT ELECTRICAL, 240 VOLT, 1 PHASE, 23A MCA, 25A MOCP.

HP-1
TRANE 4TWR5018 OR EQUAL HEAT PUMP UNIT, 1.5 TONS NOMINAL CAPACITY. 240 VOLT, 1 PHASE, 9A MCA, 15A MOCP. MINIMUM 14 SEER. PROVIDE WITH SHORT CYCLE TIMER, DEFROST CONTROL.

ERV-1:
GREENHECK MINICORE-5 ENERGY RECOVERY VENTILATOR OR EQUAL, 550 CFM INTAKE, 550 CFM EXHAUST, 0.5" SP SUPPLY AND EXHAUST FANS, MERV 8 INTAKE AND EXHAUST FILTERS, TOTAL ENTHALPY CORE W/ 61% MINIMUM EFFECTIVENESS AT 98° F DW / 80° F WB. PROVIDE BACKDRAFT DAMPER AND CEILING SUSPENSION KIT. 120V / 17.6A MCA / 25A MOCP.

UH-1
REZNOR EGEB ELECTRIC UNIT HEATER OR EQUAL, 5 KW, 310 CFM, 240 V. PROVIDE WITH WALL MOUNTING BRACKET AND MOUNT WITH TOP OF UNIT 12" BELOW STRUCTURE. PROVIDE WITH INTEGRAL THERMOSTAT SET TO 55° F.

SD-1
TITUS MODEL SG-1500FL ALUMINUM SECURITY GRILLE OR EQUAL, 10"X10"" DUCT SIZE, WITH WELDED ALUMINUM SECURITY CORE AND MOUNTING ANGLES, WHITE FINISH, MAX. NC 25.

EG-1
TITUS MODEL SG-1500FL ALUMINUM SECURITY GRILLE OR EQUAL, 10"X10"" DUCT SIZE, WITH WELDED ALUMINUM SECURITY CORE AND MOUNTING ANGLES, WHITE FINISH, MAX. NC 25.

EG-2
TITUS MODEL 50F EXHAUST GRILLE OR EQUAL, 6"X6" DUCT CONNECTION, ALUMINUM, WITH EGGCRATE CORE AND WHITE FINISH. MAX. NC 25.

LVR-1 AND LVR-2
RUSKIN MODEL ELF6375X WALL LOUVER OR EQUAL, 16"x 16", 0.88 SQ. FT. FREE AREA, ALUMINUM CONSTRUCTION, BIRDSCREEN, KYNAR FINISH TO MATCH BUILDING COLOR

## CONTROL NOTES

AHU-1 & 2 / HP-1 & 2:
1. UNIT SHALL BE CONTROLLED BY AUTOMATIC HEATING/COOLING CHANGE-OVER 7 DAY PROGRAMMABLE THERMOSTAT/HUMIDISTAT WITH REMOTE TEMPERATURE SENSOR AND HUMIDITY SENSOR LOCATED AS SHOWN ON PLAN. PROVIDE REMOTE SENSORS WITH ANTI-TAMPER ENCLOSURES.
2. AHU FAN SHALL RUN CONTINUOUSLY.
3. THE SYSTEM SHALL RUN IN HEATING / COOLING MODE WHENEVER THE THERMOSTAT CALLS FOR HEATING / COOLING. THE HEAT PUMP WILL ENGAGE IN HEATING / COOLING MODE AS REQUIRED. EMERGENCY ELECTRIC HEATING SHALL BE ACTIVATED ONLY IN THE EVEN OF THE FAILURE OF THE HEAT PUMP TO MAINTAIN A DISCHARGE AIR TEMPERATURE OF 95° F MINIMUM.
4. THE SYSTEM WILL RUN IN DEHUMIDIFICATION MODE WHEN THE HUMIDISTAT CALLS FOR DEHUMIDIFICATION, THE HEAT PUMP SHALL RUN IN COOLING MODE AND THE AIR HANDLER ELECTRIC HEATER WILL STAGE TO PROVIDE ROOM NEUTRAL AIR AS MEASURED BY THE DISCHARGE AIR SENSOR.
5. CALLS FOR HEATING / COOLING WILL TAKE PRIORITY OVER CALLS FOR DEHUMIDIFICATION.

ERV-1:
1. UNIT FANS SHALL RUN CONTINUOUSLY.

UH-1
1. UNIT FAN AND HEATING COIL SHALL ENGAGE WHEN THE UNIT-MOUNTED THERMOSTAT CALLS FOR HEATING.

## GENERAL NOTES

1. COORDINATE THE WORK OF THIS SHEET WITH ALL OTHER TRADES PRIOR TO STARTING CONSTRUCTION.
2. ALL LISTED ELEVATIONS ARE TO THE BOTTOM OF DUCT/DEVICE/EQUIPMENT UNLESS OTHERWISE NOTED.
3. REFER TO THE STRUCTURAL DRAWINGS AND SPECIFICATIONS FOR INFORMATION ON THE SEISMIC CLASSIFICATION OF THIS BUILDING. CONTRACTOR IS RESPONSIBLE TO PROVIDE SEISMIC BRACING AS REQUIRED FOR THE MECHANICAL SYSTEMS ON THIS PROJECT. ALL SEISMIC RESTRAINTS SHALL BE DESIGNED AND STAMPED BY A REGISTERED PROFESSIONAL STRUCTURAL ENGINEER.
4. SEE SHEET A-431 FOR EXACT LOCATION OF WALL DIFFUSERS IN RESTROOM AREAS.

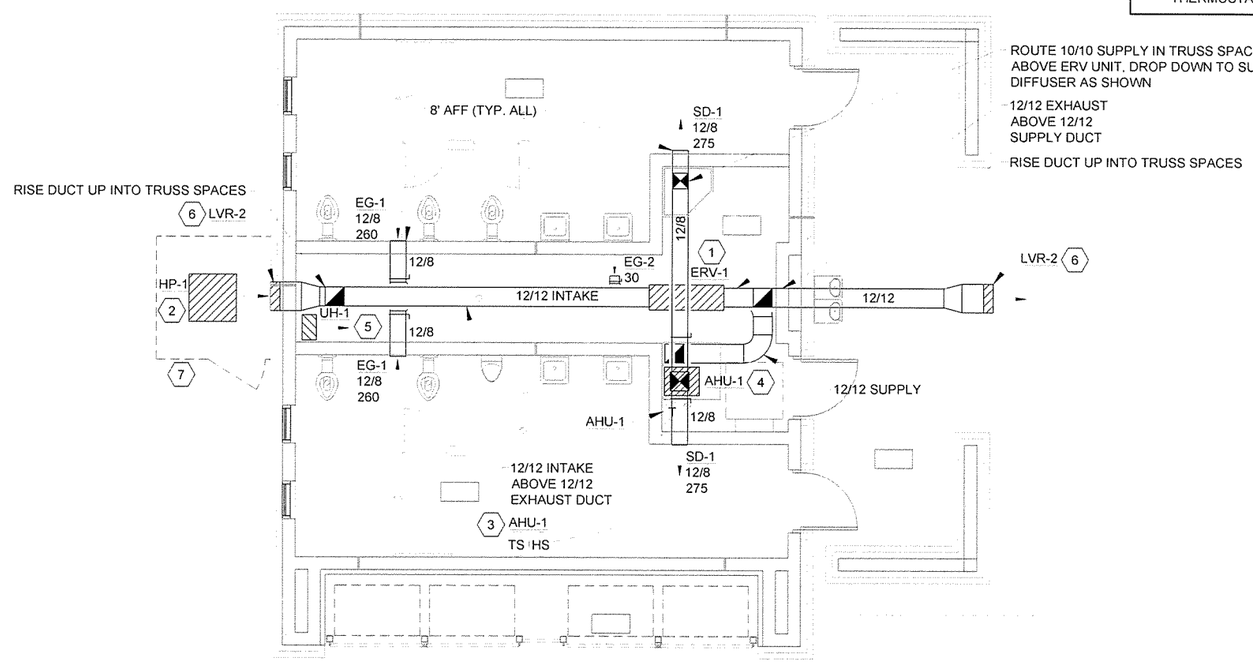


## KEYED NOTES

1. ERV UNIT SUSPENDED TIGHT TO BOTTOM OF TRUSSES.
2. PROVIDE 6" PIP HOUSEKEEPING PAD AND ANCHOR CONDENSING UNIT TO PAD WITH EPOXIED-IN BOLTS AT EACH CORNER. FIELD ROUTE CONDENSATE LINES TO INDOOR UNITS. LINES ROUTED THROUGH WALLS OR UNDER SLABS SHALL BE PROVIDED WITH A 4" PVC SLEEVE SEALED WATERTIGHT AT BOTH ENDS.
3. REMOTE MOUNTED TEMPERATURE AND HUMIDITY SENSOR. CONNECT TO THERMOSTAT MOUNTED IN MECHANICAL CHASE.
4. AHU MOUNTED ON PRE-FAB RETURN PLENUM BASE W/ FILTER RACK.
5. UNIT HEATER MOUNTED WITH TOP 12" BELOW BOTTOM OF STUCTURE.
6. LOUVER MOUNTED HIGH IN GABLE WALL. SEE ARCH. ELEVATIONS FOR EXACT MOUNTING HEIGHT.
7. PROVIDE CHAIN LINK ENCLOSURE AROUND HEAT PUMP UNITS WITH LOCKING GATE AND CHAIN LINK TOP. REFER TO AHTD STANDARD DRAWING WF-3 FOR FENCE CONSTRUCTION DETAILS.

## LEGEND

| | |
|---|---|
| | MECHANICAL EQUIPMENT (TYP.) |
| | CEILING SUPPLY AIR DIFFUSER (TYP.) |
| | CEILING RETURN AIR GRILLE (TYP.) |
| | CEILING EXHAUST AIR GRILLE (TYP.) |
| | BALANCING DAMPER W/ LOCKING QUADRANT |
| SD-1 / 10x6 / 160 | AIR DEVICE - DEVICE TYPE, NECK SIZE, CFM |
| T | THERMOSTAT, MOUNTED 54" AFF |
| TS/HS | TEMPERATURE AND HUMIDITY SENSORS, MOUNTED 54" AFF. |

PROJECT NORTH

1 / M-131 FLOOR PLAN
SCALE: 1/4" = 1'-0"

0 2' 4' 8' 12'
SCALE: 1/4" = 1'-0"


GARVER
4701 Northshore Drive
N Little Rock, AR 72118
501-376-3633
www.GarverUSA.com


CERTIFICATE OF AUTHORIZATION GARVER LLC No. 766 ARKANSAS ENGINEER

STATE OF ARKANSAS LICENSED PROFESSIONAL ENGINEER No. 17074 LEE E. SUGGS 9/30/15

| Symbol | Description | Date | Appr. |
|---|---|---|---|
| IFC | ISSUED FOR CONSTRUCTION | 10/1/15 | JRR |

Job Number 060451
Submitted by John T Vinson, P.E., S.E. Director / Federal Services
Plot Date 9/29/15 | Plot Scale 1:1 | N/A | N/A | N/A
Drawn by L. SUGGS | Checked by B. BRADSHAW | Drop Code - | File Name AH15WR-M-131.DWG
Designed by L. SUGGS

ARKANSAS HIGHWAY AND TRANSPORTATION DEPARTMENT
ARKANSAS TOURIST INFORMATION CENTER (WHITE RIVER) (S)
JOB 061451

TRUCKER-VENDING BUILDING MECHANICAL PLAN

Sheet Reference Number:
M-131

## EQUIPMENT SCHEDULE

AHU-1 / AHU-2
TRANE TAM4-42 OR EQUAL SPLIT SYSTEM AIR HANDLING UNIT WITH EMERGENCY STRIP HEATING. 1300 CFM AIRFLOW AT 0.5" WG ESP, 875 CFM OSA, COOLING CAPACITY 32.0MBH SENSIBLE, 8.0MBH LATENT AT 80F DB/67F WB ENTERING CONDITIONS, HEATING CAPACITY 26.2MBH AT 17F. 9.6 KW 3-STAGE ELECTRIC HEATER. PRE-FABRICATED RETURN PLENUM BASE W/ FILTER RACK WITH MERV 8 1" FILTER. SINGLE POINT ELECTRICAL, 240 VOLT, 1 PHASE, 53A MCA, 60A MOCP.

HP-1 AND HP-2
TRANE 4TWR5042 OR EQUAL HEAT PUMP UNIT, 3.5 TONS NOMINAL CAPACITY. 240 VOLT, 1 PHASE, 23A MCA, 40A MOCP. MINIMUM 14 SEER. PROVIDE WITH SHORT CYCLE TIMER, DEFROST CONTROL.

CRAC-1
LG MODEL LSN090HSV4/LSU090HSV4 OR EQUAL DUCTLESS MINI-SPLIT HEAT PUMP, 350 CFM, 9MBH COOLING CAPACITY, 10.8MBH HEATING CAPACITY, 21 SEER. SINGLE POINT ELECTRICAL, 240 VOLT, 1 PHASE, 10A MCA, 15A MOCP.

ERV-1 / ERV-2:
GREENHECK ERV-10 ENERGY RECOVERY VENTILATOR OR EQUAL, 875 CFM INTAKE, 830 CFM EXHAUST, 0.5" SP SUPPLY AND EXHAUST FANS, MERV 8 INTAKE AND EXHAUST FILTERS, TOTAL ENTHALPY CORE W/ 58% MINIMUM EFFECTIVENESS AT 98° F DW / 80° F WB. PROVIDE BACKDRAFT DAMPER AND SUSPENSION KIT. 120V / 22A MCA / 30A MOCP.

RH-1 / RH-3
GREENHECK FGI ROOF INTAKE HOOD OR EQUAL, 18"X18" NECK, 900 CFM, PROVIDE WITH 8" ROOF CURB TO MATCH ROOF CONSTRUCTION, AND BIRDSCREEN. COLOR TO MATCH ROOF.

RH-2 / RH-4
GREENHECK FGR ROOF EXHAUST HOOD OR EQUAL, 18"X18" NECK, 800 CFM, PROVIDE WITH 8" ROOF CURB TO MATCH ROOF CONSTRUCTION, AND BIRDSCREEN. COLOR TO MATCH ROOF.

UH-1 / UH-2 / UH-3 / UH-4 / UH-5 / UH-6
REZNOR EGEB ELECTRIC UNIT HEATER OR EQUAL, 5 KW, 310 CFM, 240 V. PROVIDE WITH WALL MOUNTING BRACKET AND MOUNT WITH TOP OF UNIT 8' AFF. PROVIDE WITH INTEGRAL THERMOSTAT SET TO 55° F.

SD-1
TITUS MODEL TMSA ALUMINUM SUPPLY DIFFUSER OR EQUAL, STEEL, 24"X24" FACE, WHITE FINISH. NECK SIZE AS INDICATED ON PLANS, MAX. NC 25.

SD-2
TITUS MODEL 300FL SUPPLY DIFFUSER OR EQUAL, 10"X6" DUCT CONNECTION, DOUBLE DEFLECTION, ALUMINUM, WHITE FINISH, MAX. NC 25.

RG-1
TITUS MODEL 50F RETURN GRILLE OR EQUAL, 24"X24" FACE, ALUMINUM, WITH EGGCRATE CORE AND WHITE FINISH. MAX. NC 25.

EG-1
TITUS MODEL SG-1500FL ALUMINUM SECURITY GRILLE OR EQUAL, 8"X8" DUCT SIZE, WITH WELDED ALUMINUM SECURITY CORE AND MOUNTING ANGLES, WHITE FINISH, MAX. NC 25.

EG-2
TITUS MODEL 50F EXHAUST GRILLE OR EQUAL, 6"X6" DUCT CONNECTION, ALUMINUM, WITH EGGCRATE CORE AND WHITE FINISH. MAX. NC 25.

CF-1
BIG ASS FANS MODEL "ISIS" IS10 CEILING FAN OR EQUAL, 10' DIAMETER, WITH 8 ALUMINUM AIRFOIL BLADES WITH SILVER WINGLETS, GEARLESS DIRECT DRIVE MOTOR, 120V, 1 PHASE, 3.9A. PROVIDE WITH MANUFACTURER'S CONTROL SWITCH MOUNTED IN THE JANITOR'S CLOSET. PROVIDE WITH MANUFACTURER'S STRUCTURAL MOUNTING SYSTEM INCLUDING STABILIZING GUY WIRES, AND INSTALL ACCORDING TO MANUFACTURER'S REQUIREMENTS.

## CONTROL NOTES

AHU-1 & 2 / HP-1 & 2:
1. UNIT SHALL BE CONTROLLED BY AUTOMATIC HEATING/COOLING CHANGE-OVER 7 DAY PROGRAMMABLE THERMOSTAT/HUMIDISTAT WITH REMOTE TEMPERATURE SENSOR AND HUMIDITY SENSOR LOCATED AS SHOWN ON PLAN. PROVIDE REMOTE SENSORS WITH ANTI-TAMPER ENCLOSURES.
2. AHU FAN SHALL RUN CONTINUOUSLY.
3. THE SYSTEM SHALL RUN IN HEATING / COOLING MODE WHENEVER THE THERMOSTAT CALLS FOR HEATING / COOLING. THE HEAT PUMP WILL ENGAGE IN HEATING / COOLING MODE AS REQUIRED. EMERGENCY ELECTRIC HEATING SHALL BE ACTIVATED ONLY IN THE EVEN OF THE FAILURE OF THE HEAT PUMP TO MAINTAIN A DISCHARGE AIR TEMPERATURE OF 95° F MINIMUM.
4. THE SYSTEM WILL RUN IN DEHUMIDIFICATION MODE WHEN THE HUMIDISTAT CALLS FOR DEHUMIDIFICATION, THE HEAT PUMP SHALL RUN IN COOLING MODE AND THE AIR HANDLER ELECTRIC HEATER WILL STAGE TO PROVIDE ROOM NEUTRAL AIR AS MEASURED BY THE DISCHARGE AIR SENSOR.
5. CALLS FOR HEATING / COOLING WILL TAKE PRIORITY OVER CALLS FOR DEHUMIDIFICATION.

CRAC-1:
1. UNIT SHALL BE CONTROLLED BY AUTOMATIC HEATING/COOLING CHANGE-OVER 7 DAY PROGRAMMABLE THERMOSTAT LOCATED AS SHOWN ON PLAN. AHU FAN SHALL RUN WHENEVER THERMOSTAT CALLS FOR HEATING/COOLING.

ERV-1 & 2:
1. UNIT FANS SHALL RUN CONTINUOUSLY.

UH-1 THRU 6
1. UNIT FAN AND HEATING COIL SHALL ENGAGE WHEN THE UNIT-MOUNTED THERMOSTAT CALLS FOR HEATING.

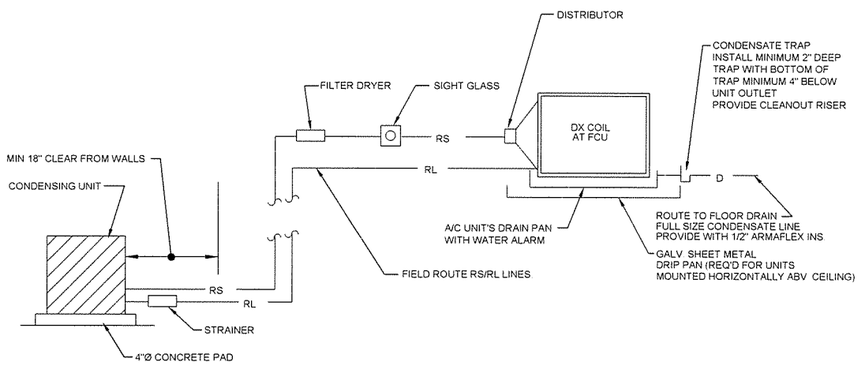


1 / M-201 SPLIT SYSTEM HEAT PUMP INSTALLATION DETAIL
SCALE: NONE

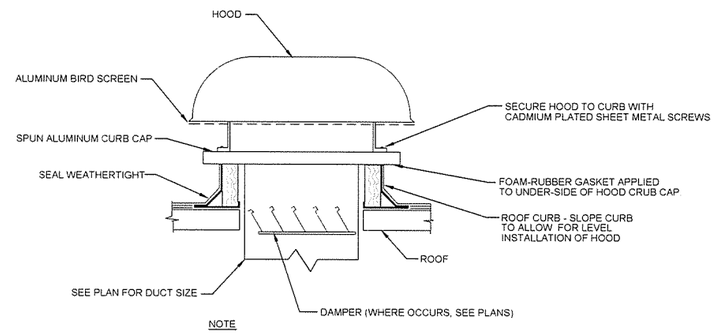


NOTE
1. FOR INTAKES, MAINTAIN MINIMUM 10' CLEARANCE FROM ANY EXHAUST OR PLUMBING VENT TERMINATION

2 / M-201 ROOF INTAKE / EXHAUST HOOD INSTALLATION DETAIL
SCALE: NONE

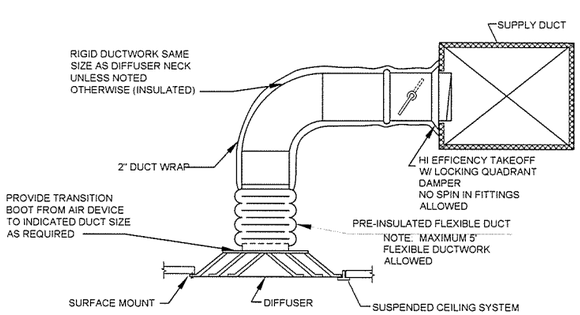


3 / M-201 SUPPLY DIFFUSER / RETURN/EXHAUST GRILLE DETAIL
SCALE: NONE

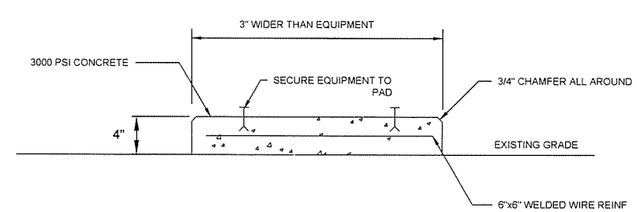


NOTES:
1. PROVIDE HOUSEKEEPING PADS FOR ALL NEW, GROUND MOUNTED, MECHANICAL EQUIPMENT
2. INSTALL STAINLESS STEEL EXPANSION ANCHORS AND SECURE EQUIPMENT TO PAD
3. DO NOT POUR PAD IN DIRECT CONTACT WITH ANY ADJACENT WALL SURFACES

4 / M-201 OUTDOOR HVAC EQUIPMENT PAD DETAIL
SCALE: NONE


GARVER
4701 Northshore Drive
N Little Rock, AR 72118
501-376-3633
www.GarverUSA.com


CERTIFICATE OF AUTHORIZATION
GARVER LLC
No. 766
ARKANSAS ENGINEER

STATE OF ARKANSAS
LICENSED PROFESSIONAL ENGINEER
No. 11074
LEE E. SUGGS
10/1/15

| Symbol | Description | Date | Appr. |
|---|---|---|---|
| IFC | ISSUED FOR CONSTRUCTION | 10/1/15 | JRR |

Job Number 061451
Submitted by John T. Williams III, PE, SE, Director, Federal Services
Designed by L. SUGGS
Drawn by L. SUGGS
Plot Date 9/23/15
Plot Scale 1:1
Checked by B. BRADSHAW
Dwg Code N/A
File Name AH15WR-M-201.DWG

ARKANSAS HIGHWAY AND TRANSPORTATION DEPARTMENT
ARKANSAS TOURIST INFORMATION CENTER
(WHITE RIVER) (S)
JOB 061451

TOURIST INFORMATION CENTER
MECHANICAL DETAILS

Sheet Reference Number:
M-201

## LEGEND

- HOT WATER
- COLD WATER
- SS — SS — SANITARY SEWER PIPING BELOW SLAB
- SANITARY SEWER SLAB
- SANITARY VENT

DOMESTIC WATER

- ELBOW UP
- ELBOW DOWN
- TEE OUTLET UP
- TEE OUTLET DOWN
- TEE PLAN VIEW
- ELBOW PLAN VIEW

SANITARY DRAINAGE

- ELBOW UP
- ELBOW DOWN
- VALVE IN DROP
- VALVE IN CENTER DROP
- UNION
- CONCENTRIC REDUCER
- # KEYED NOTE NOTE REFERENCE
- HOSE BIB OR WALL HYDRANT

## ABBREVIATIONS

| | |
|---|---|
| COTG | CLEANOUT TO GRADE |
| TWCOTG | TWO-WAY CLEANOUT TO GRADE |
| CO | INTERIOR CLEANOUT |
| VTR | VENT THROUGH ROOF |
| FD | FLOOR DRAIN |
| AFF | ABOVE FINISHED FLOOR |
| AFG | ABOVE FINISHED GRADE |
| CW | DOMESTIC COLD WATER |
| HW | DOMESTIC HOT WATER |
| DWV | DRAIN WASTE AND VENT |
| GPM | GALLONS PER MINUTE |
| GPF | GALLONS PER FLUSH |
| DFU | DRAIN FUIXTURE UNITS |
| WFU | WATER FIXTURE UNITS |
| OD | OUTSIDE DIAMETER |
| I.P.S. | IRON PIPE SIZE |
| WHA | WATER HAMMER ARRESTOR |

## VALVE SYMBOLS

- BALL VALVE (BV)
- CHECK VALVE (CV)
- GATE VALVE (GV)

## FINAL FIXTURE INSTALLATION NOTE:

1. THE CONTRACTOR IS CAUTIONED THAT CEILING, WALL, AND FLOOR COATING SYSTEMS WILL BE APPLIED TO ALL RESTROOM SURFACES. THRU-WALL ROUGH-IN FOR FIXTURES MAY OCCUR AT THE CONTRACTOR'S DISCRETION, WHETHER DURING INSTALLATION OR AFTER THE CONCRETE MASONRY WALLS ARE INSTALLED, BUT FINAL INSTALLATION OF WALL HUNG AND CARRIER MOUNTED FIXTURES SHALL ONLY OCCUR AFTER THE CEILING, WALL AND FLOOR COATINGS ARE COMPLETE.

## PLUMBING MATERIALS NOTES:

A. DOMESTIC WATER PIPING ABOVE SLAB SHALL BE TYPE 'L' DRAWN COPPER WITH WROUGHT COPPER FITTINGS AND LEAD FREE SOLDER JOINTS OR MECHANICAL "PRO-PRESS" TYPE FITTINGS. ROUTE IN CHASES AS INDICATED ON THE DRAWINGS. DO NOT INSTALL ABOVE CEILING.

B. INSULATE ALL ABOVE SLAB DOMESTIC WATER WITH 1/2 INCH THICK FLEXIBLE UNICELLULAR INSULATION (ARMAFLEX OR EQUAL).

C. ALL DOMESTIC WATER BELOW SLAB SHALL BE PLASTIC COATED TYPE 'K' COPPER TUBE WITH NO FITTINGS.

D. SANITARY SEWER PIPING ABOVE FINISH FLOOR SHALL BE SCHEDULE 40 PVC DWV EXCEPT FOR WATER CLOSET CARRIER FITTINGS. SLOPE ALL PIPING 3" AND LARGER IN SIZE AT 1/8 INCH PER FOOT. SLOPE ALL PIPING LESS THAN 3" SIZE AT 1/4 INCH PER FOOT.

E. SANITARY SEWER PIPING BELOW FINISH FLOOR OR GRADE SHALL BE SCHEDULE 40 PVC DWV. SLOPE ALL PIPING 3" AND LARGER IN SIZE AT 1/8 INCH PER FOOT. SLOPE ALL PIPING LESS THAN 3" SIZE AT 1/4 INCH PER FOOT.

F. ALL MOUNTING HARDWARE, THRU BOLTS, NUTS, CAP NUTS, WASHERS, BACKER PLATES, ETC. SHALL BE TYPE 316 STAINLESS STEEL.

G. ALL WATER CLOSET CARRIERS SHALL BE COATED CAST IRON WITH APPROPRIATE HARDWARE. PAINT ALL CAST IRON PARTS TO MINIMIZE OXIDATION PROCESS.

## PLUMBING CLEANOUT NOTES:

A. FLOOR CLEANOUT (FCO), CLEANOUT TO GRADE WHERE APPLICABLE (COTG), AND TWO-WAY CLEANOUT TO GRADE (TWCOTG) SHALL BE ZURN Z1400-Z WITH BRONZE PLUG OR EQUAL.

## GENERAL PLUMBING NOTES:

1. PROVIDE ALL REQUIRED PIPE, FITTING, VALVES, HANGERS, SUPPORTS, SLEEVES, INSERTS, TRAPS AND OTHER SUCH EQUIPMENT, ITEMS AND DEVICES, AS MAY BE REQUIRED FOR A COMPLETE AND OPERATING SYSTEM OR SYSTEMS, INCLUDING ALL POINTS AUXILIARY TO THE SYSTEM OR SYSTEMS WHETHER OR NOT SPECIFICALLY SET FORTH HEREIN AND/OR SHOWN ON THE DRAWINGS.

2. WORK SHALL BE EXECUTED AND INSPECTED IN ACCORDANCE WITH LOCAL AND STATE CODES, LAWS, ORDINANCES, RULES AND REGULATIONS APPLICABLE TO THE PARTICULAR CLASS OF WORK AND ANY FEES IN CONNECTION THEREWITH SHALL BE PAID BY THE CONTRACTOR.

3. ALL PLUMBING SHALL BE INSTALLED IN ACCORDANCE WITH THE 2006 ARKANSAS STATE PLUMBING CODE AND IN COMPLIANCE WITH THE REQUIREMENTS OF THE LOCAL AUTHORITY HAVING JURISDICTION.

4. ALL DRAWINGS ARE DIAGRAMMATIC AND INDICATE THE GENERAL ARRANGEMENTS OR GEOMETRICAL RELATIONSHIPS OF EQUIPMENT AND SERVICES. THEY ARE NOT INTENDED TO SPECIFY OR SHOW EVERY OFFSET, SEQUENCE, DEVICE, OPTION, FITTING, OR COMPONENT.

5. INFORMATION AND COMPONENTS SHOWN ON RISER DIAGRAMS OR DETAILS, BUT NOT SHOWN ON PLANS, AND VICE VERSA, SHALL BE PROVIDED AS IF EXPRESSLY REQUIRED BY BOTH.

6. UNLESS NOTED OTHERWISE, THE INDICATION AND/OR DESCRIPTION OF ANY ITEM, IN THE DRAWINGS OR SPECIFICATIONS CARRIES WITH IT THE INSTRUCTION TO PROVIDE THE ITEM.

7. CONTRACTOR WILL BE RESPONSIBLE FOR COORDINATING ALL WORK WITH THAT OF OTHER TRADES. REFER TO ARCHITECTURAL, ELECTRICAL, AND OTHER DRAWINGS FOR COMPLETE INFORMATION.

8. INSTALL ALL EXPOSED PLUMBING PIPING ALONG UTILITY CHASE WALLS AS CLOSE TO THE CHASE WALLS AS POSSIBLE FOR MAXIMUM OWNER MAINTENANCE SPACE AND CLEAR FLOOR SPACE. INSTALL ALL EXPOSED OVERHEAD LINES AS HIGH AS POSSIBLE. REFER TO DETAILS ON PLANS FOR EXPECTED CLEARANCES FROM UTILITY CHASE WALLS.

9. THE STRUCTURE(S) WITHIN THIS DESIGN PACKAGE ARE EXPECTED TO HAVE THE INTERIORS HOSED DOWN FOR CLEANING ON A REGULAR BASIS. TO THAT END, NEATLY AND CONTINUOUSLY SEAL WITH CLEAR SILICONE SEALANT AROUND ALL NEW WALL HUNG, STAINLESS STEEL LAVATORIES, WALL HUNG, STAINLESS STEEL URINALS AND WALL HUNG, CARRIER MOUNTED, STAINLESS STEEL WATER CLOSETS.

10. COORDINATE WITH MASONRY CONTRACTOR TO ENSURE ALL CONCRETE MASONRY UNITS LOCATED AT WALL HUNG FIXTURES AND WATER CLOSET CARRIER BOLTS ARE GROUTED.

11. NEATLY CABLE-TIE ALL LOW VOLTAGE WIRING TO WALLS. BUNDLE MULTIPLE CABLES TOGETHER WHERE APPLICALE.


GARVER
4701 Northshore Drive
N Little Rock, AR 72118
501-376-3633
www.GarverUSA.com


CERTIFICATE OF AUTHORIZATION
GARVER LLC
No. 766
ARKANSAS ENGINEER

STATE OF ARKANSAS
LICENSED PROFESSIONAL ENGINEER
No. 11074
LEE E. SUGGS
11/30/15

| Symbol | Description | Date | Appr. |
|---|---|---|---|
| IFC | ISSUED FOR CONSTRUCTION | 10/1/15 | JRR |

Designed by: K SULLIVAN
Drawn by: K SULLIVAN
Checked by: B. BRADSHAW
Submitted by: John T. Williams III, PE, SE, Director, Federal Services
Plot Date: 9/29/15
Plot Scale: 1:1
Dwg Code: -
File Name: AH15VIR-P-001.DWG
Job Number: 060451
N/A
N/A
N/A

ARKANSAS HIGHWAY AND TRANSPORTATION DEPARTMENT
ARKANSAS TOURIST INFORMATION CENTER
(WHITE RIVER) (S)
JOB 061451

LEGEND, ABBREVIATIONS AND NOTES

Sheet Reference Number:
P-001

## GENERAL NOTES

1. GENERAL NOTES

## KEYED NOTES

1. SEE SITE PLAN FOR CONTINUATION. ESTIMATED DEMAND IS 81 DFU.
2. COORDINATE CONCRETE BLOCKOUT AS MAY BE REQUIRED FOR HORIZONTAL PIPING AND HORIZONTAL-TO-VERTICAL CONNECTION FITTING WITH FOUNDATION INSTALLER.
3. SLEEVE THROUGH STRUCTURAL STEM WALL. REFER TO STRUCTURAL SHEETS FOR EXTERIOR WALL FOUNDATION SECTIONS.

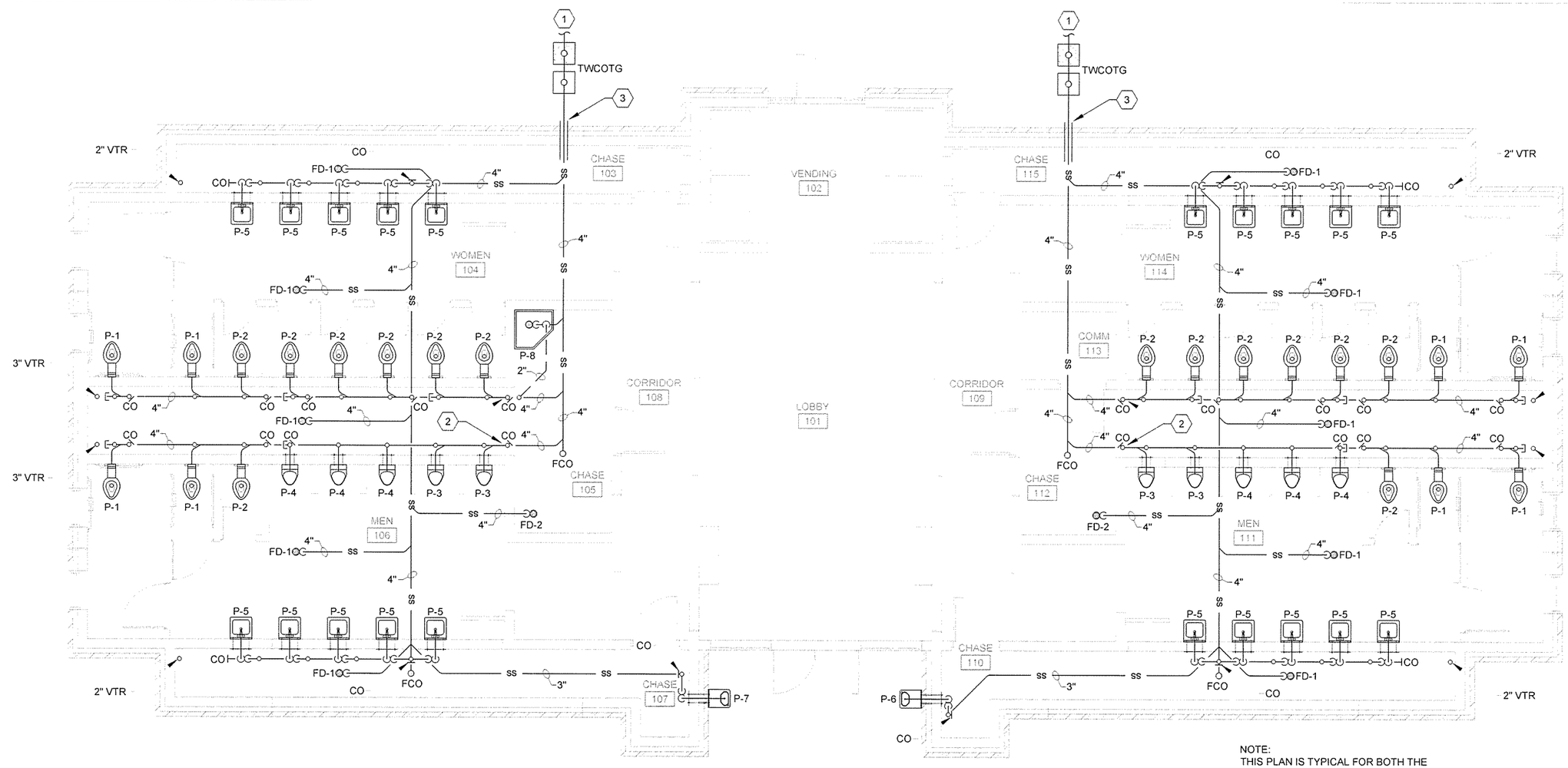


NOTE:
THIS PLAN IS TYPICAL FOR BOTH THE EAST BOUND AND WEST BOUND TOURIST INFORMATION CENTERS.

1 / P-101 TOURIST INFORMATION CENTER - SANITARY SEWER PIPING PLAN

SCALE: 1/4" = 1'-0"

0 2' 4' 8' 12'
SCALE: 1/4" = 1'-0"

GARVER
4701 Northshore Drive
N Little Rock, AR 72118
501-376-3633
www.GarverUSA.com

CERTIFICATE OF AUTHORIZATION
GARVER LLC
No. 766
ARKANSAS ENGINEER

STATE OF ARKANSAS
LICENSED PROFESSIONAL ENGINEER
No. 11074
LEE E. SUGGS
9/30/15

| IFC Symbol | ISSUED FOR CONSTRUCTION Description | 10/1/15 Date | JRR Appr. |
|---|---|---|---|

Job Number 060451
Submitted by John T. Watkins, III, P.E., SE Director, Federal Services
Plot Scale 1:1
Plot Date 9/29/15
Drawn by K. SULLIVAN
Checked by B. BRADSHAW
Drwg Code
File Name AH15WR-P-101.DWG
Designed by K. SULLIVAN

ARKANSAS HIGHWAY AND TRANSPORTATION DEPARTMENT
ARKANSAS TOURIST INFORMATION CENTER
(WHITE RIVER) (S)
JOB 061451

TOURIST INFORMATION CENTER
SANITARY SEWER PIPING PLAN

Sheet Reference Number:
P-101

## GENERAL NOTES

## KEYED NOTES

1. SEE SITE PLAN FOR CONTINUATION. ESTIMATED DEMAND IS 141 WFU. PER TABLE E103.3(3) - 77 GPM.
2. INSTALL FULL PORT BALL VALVE AT SERVICE ENTRANCE INTO UTILITY CHASE.
3. SLEEVE THROUGH STRUCTURAL STEM WALL. REFER TO STRUCTURAL SHEETS FOR EXTERIOR WALL FOUNDATION SECTIONS.
4. INSTALL WATER CHILLER FOR DRINKING FOUNTAIN ON SPECIFIED SHELF AS NOTED IN FIXTURE SCHEDULE, SHEET P-601.
5. SEE SITE PLAN FOR CONTINUATION. ESTIMATED DEMAND IS 16 WFU. PER TABLE E103.3(3) - 18 GPM.

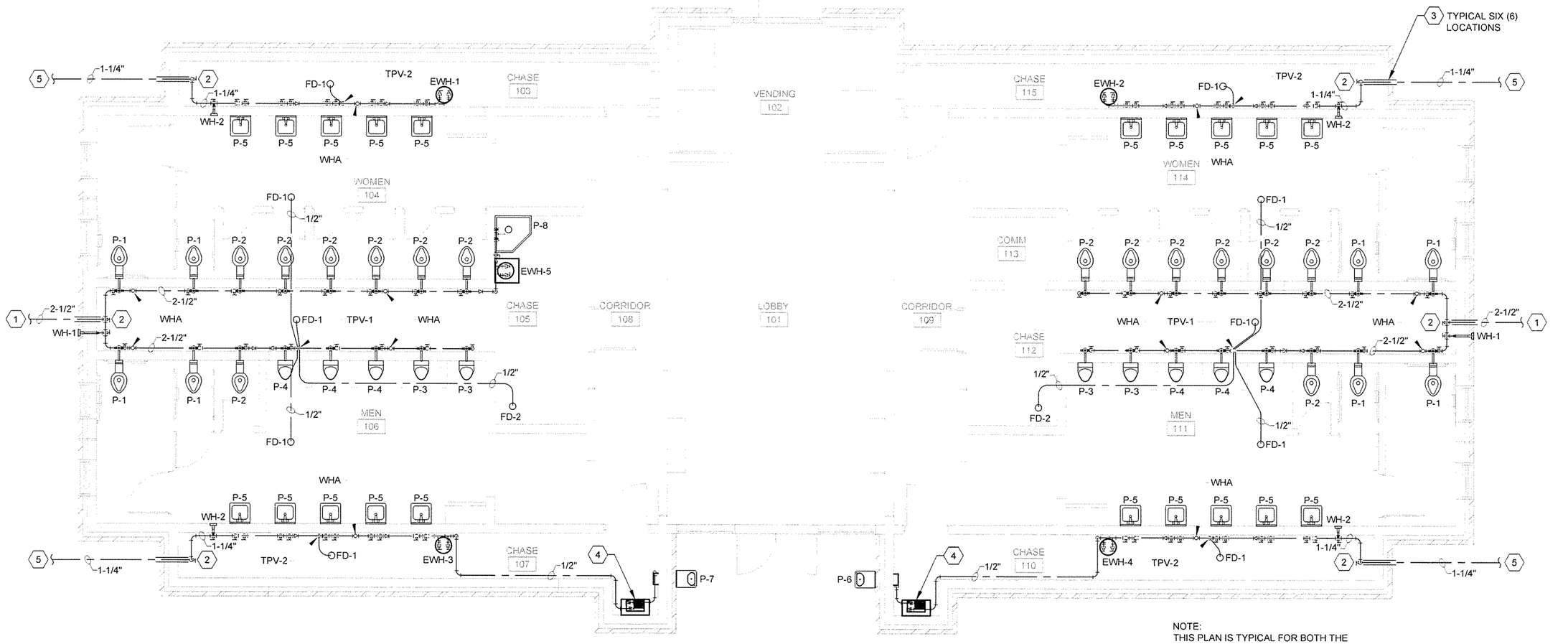


NOTE:
THIS PLAN IS TYPICAL FOR BOTH THE EAST BOUND AND WEST BOUND TOURIST INFORMATION CENTERS.

1 / P-102 TOURIST INFORMATION CENTER - DOMESTIC WATER PIPING PLAN
SCALE: 1/4" = 1'-0"

0 2' 4' 8' 12'
SCALE: 1/4" = 1'-0"


GARVER
4701 Northshore Drive
N Little Rock, AR 72118
501-376-3633
www.GarverUSA.com


CERTIFICATE OF AUTHORIZATION
GARVER LLC
No. 766
ARKANSAS ENGINEER

STATE OF ARKANSAS
LICENSED PROFESSIONAL ENGINEER
No. 11074
LEE E. SUGGS
9/30/15

| IPC Symbol | Description | Date | Appr |
|---|---|---|---|
| | ISSUED FOR CONSTRUCTION | 10/1/15 | JRR |

Designed by K SULLIVAN
Drawn by K SULLIVAN
Checked by B BRADSHAW
Submitted by John T Watkins, III, PE, SE Director, Federal Services
Plot Date 9/29/15
Plot Scale 1:1
Dwg Code
Job Number 060451
File Name AH15WR-P-102.DWG

ARKANSAS HIGHWAY AND TRANSPORTATION DEPARTMENT
ARKANSAS TOURIST INFORMATION CENTER
(WHITE RIVER) (S)
JOB 061451

TOURIST INFORMATION CENTER
DOMESTIC WATER PIPING PLAN

Sheet Reference Number:
P-102

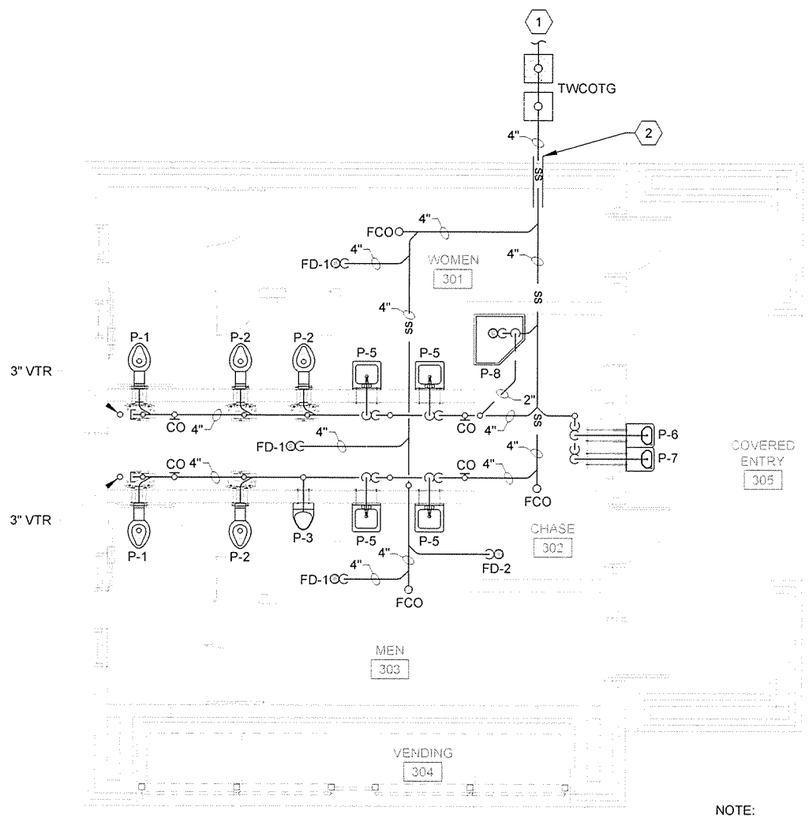


NOTE:
THIS PLAN IS TYPICAL FOR BOTH THE EAST BOUND AND WEST BOUND TRUCKER-VENDING BUILDINGS.

## GENERAL NOTES

1. GENERAL NOTES

## KEYED NOTES

1. SEE SITE PLAN FOR CONTINUATION. ESTIMATED DEMAND IS 37 DFU.
2. SLEEVE THROUGH STRUCTURAL STEM WALL. REFER TO STRUCTURAL SHEETS FOR EXTERIOR WALL FOUNDATION SECTIONS.

# 1 / P-131 TRUCKER-VENDING BUILDING - SANITARY SEWER PIPING PLAN

SCALE: 1/4" = 1'-0"

0 2' 4' 8' 12'
SCALE: 1/4" = 1'-0"

GARVER
4701 Northshore Drive
N Little Rock, AR 72118
501-376-3633
www.GarverUSA.com

CERTIFICATE OF AUTHORIZATION
GARVER LLC
No. 766
ARKANSAS ENGINEER

STATE OF ARKANSAS
LICENSED PROFESSIONAL ENGINEER
No. 11074
LEE E. SUGGS
9/30/15

| Symbol | Description | Date | Appr. |
|---|---|---|---|
| IFC | ISSUED FOR CONSTRUCTION | 10/1/15 | JRR |

Submitted by: John T. Williams III, PE, SE, Director, Federal Services
Job Number: 061451
Designed by: K. SULLIVAN
Plot Date: 9/29/15
Plot Scale: 1:1
Drawn by: K. SULLIVAN
Checked by: B. BRADSHAW
Dwg Code: -
File Name: AH15WR-P-131 DWG

ARKANSAS HIGHWAY AND TRANSPORTATION DEPARTMENT
ARKANSAS TOURIST INFORMATION CENTER
(WHITE RIVER) (S)
JOB 061451

TRUCKER-VENDING BUILDING
SANITARY SEWER PIPING PLAN

Sheet Reference Number:
P-131

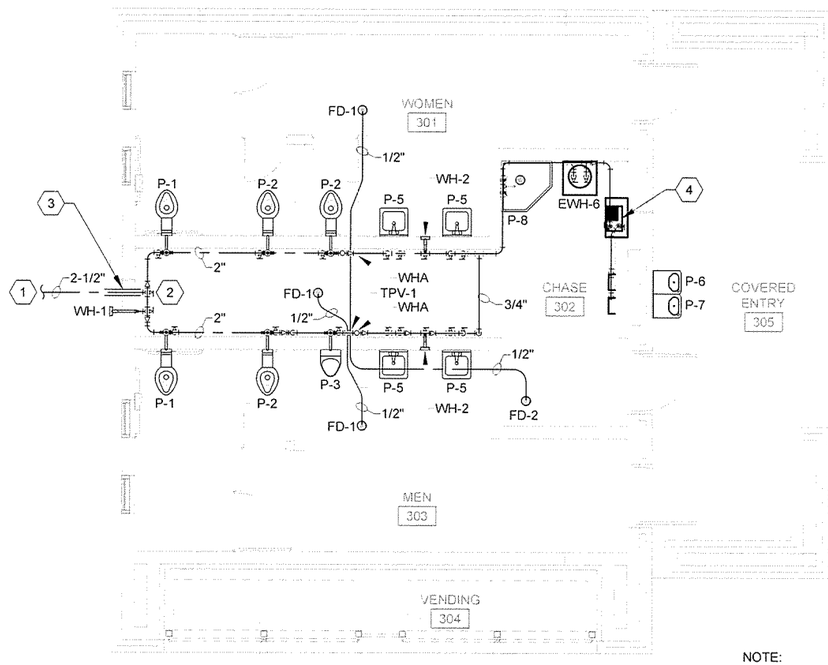


NOTE:
THIS PLAN IS TYPICAL FOR BOTH THE EAST BOUND AND WEST BOUND TRUCKER-VENDING BUILDINGS.

## GENERAL NOTES

1. GENERAL NOTES

## KEYED NOTES

1. SEE SITE PLAN FOR CONTINUATION. ESTIMATED DEMAND IS 80 WFU. PER TABLE E103.3(3) - 61 GPM.
2. INSTALL FULL PORT BALL VALVE AT SERVICE ENTRANCE INTO UTILITY CHASE.
3. SLEEVE THROUGH STRUCTURAL STEM WALL. REFER TO STRUCTURAL SHEETS FOR EXTERIOR WALL FOUNDATION SECTIONS.
4. INSTALL WATER CHILLER FOR DRINKING FOUNTAIN ON SPECIFIED SHELF AS NOTED IN FIXTURE SCHEDULE, SHEET P-601.

1 / P-132 TRUCKER-VENDING BUILDING - DOMESTIC WATER PIPING PLAN

SCALE: 1/4" = 1'-0"

0 2' 4' 8' 12'
SCALE: 1/4" = 1'-0"

GARVER
4701 Northshore Drive
N Little Rock, AR 72118
501-376-3633
www.GarverUSA.com

CERTIFICATE OF AUTHORIZATION
GARVER LLC
No. 766
ARKANSAS ENGINEER

STATE OF ARKANSAS
LICENSED PROFESSIONAL ENGINEER
No. 14074
LEE E. SUGGS
7/20/15

| Symbol | Description | Date | Appr |
|---|---|---|---|
| IFC | ISSUED FOR CONSTRUCTION | 10/1/15 | JRR |

Designed by: K SULLIVAN
Drawn by: K. SULLIVAN
Checked by: B. BRADSHAW
Submitted by: John T. Williams, III, PE, SE, Director, Federal Services
Plot Date: 9/29/15
Plot Scale: 1:1
Drwg Code: .
Job Number: 060-451
File Name: AH15WR-P-132.DWG

ARKANSAS HIGHWAY AND TRANSPORTATION DEPARTMENT
ARKANSAS TOURIST INFORMATION CENTER
(WHITE RIVER) (S)
JOB 061451

TRUCKER-VENDING BUILDING
DOMESTIC WATER PIPING PLAN

Sheet Reference Number:
P-132

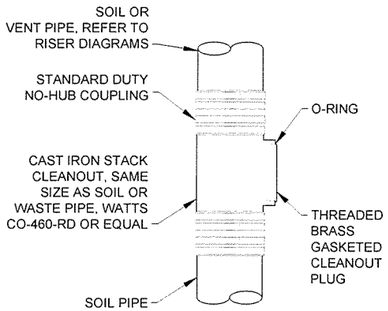


## INTERIOR CLEANOUT (CO) DETAIL

1 / P-501 SCALE: NONE

| PDI SIZING AND SELECTION TABLE | | | | |
|---|---|---|---|---|
| PIPE SIZE | FIXTURE UNITS | PDI CROSS REFERENCE | OVERALL LENGTH | CONNECTION N.P.T. |
| 1/2" | 1 - 11 | A | 6-1/4" | 1/2" |
| 3/4" | 12 - 32 | B | 7-1/4" | 3/4" |
| 1" | 33 - 60 | C | 9-1/4" | 1" |
| 1-1/4" | 61 - 113 | D | 9-1/2" | 1" |
| 1-1/2" | 114 - 154 | E | 11-1/4" | 1" |
| 2"-3" | 155 - 330 | F | 12" | 1" |

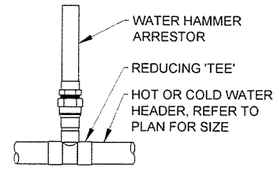


NOTES:

1. PLACE ARRESTOR AT END OF HEADER WITHIN SIX (6) FEET OF LAST FIXTURE.
2. PLACE ADDITIONAL ARRESTORS AT TWENTY (20) FOOT INTERVALS.
3. INSTALL ARRESTORS ON ALL HOT AND COLD WATER HEADERS THAT HAVE FAST ACTING VALVES LIKE FLUSHOMETERS AND SOLENOID VALVES.

## WATER HAMMER ARRESTOR DETAIL

4 / P-501 SCALE: NONE

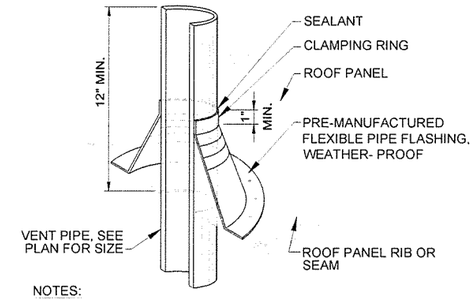


NOTES:

1. PAINT VENT TO MATCH ROOF IN ACCORDANCE WITH ARCHITECTURAL SPECIFICATIONS.
2. CENTER ALL VENT THRU ROOF PENETRATIONS BETWEEN ROOF SEAMS. DO NOT CUT ROOF SEAMS.

## VENT THRU ROOF (VTR) DETAIL

7 / P-501 SCALE: NONE

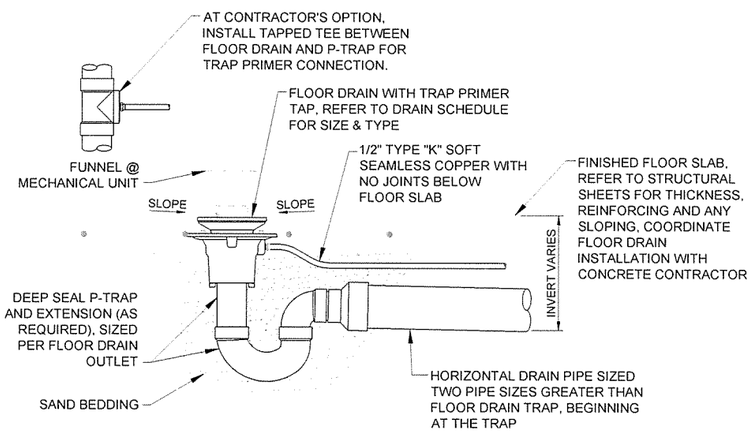


## FLOOR DRAIN (FD) DETAIL

2 / P-501 SCALE: NONE

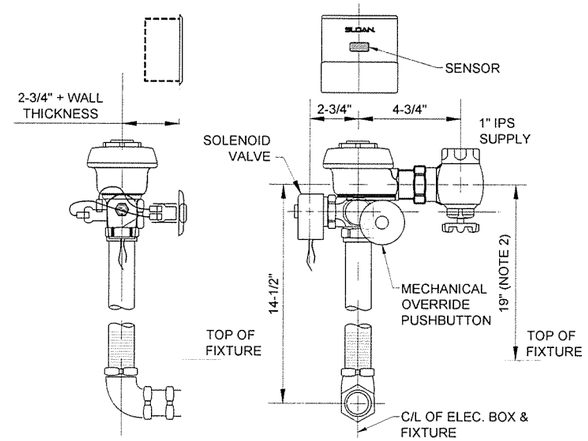


NOTES:

1. SENSOR LOCATION & POSITIONING ARE CRITICAL! FAILURE TO PROPERLY POSITION THE ELECTRICAL BOXES TO THE PLUMBING ROUGH-IN WILL RESULT IN IMPROPER INSTALLATION AND IMPAIR SENSOR PERFORMANCE. ALL TRADESMEN (PLUMBERS, ELECTRICIANS, MASONS, ETC.) INVOLVED WITH THE INSTALLATION OF THIS PRODUCT MUST COORDINATE THEIR WORK TO ASSURE PROPER SENSOR OPERATION.
2. POSITION OF SENSOR BOX MAY BE RAISED OR LOWERED 1" IF IN CONFLICT WITH HANDICAP GRAB BARS.

## WATER CLOSET FLUSH VALVE DETAIL

5 / P-501 SCALE: NONE

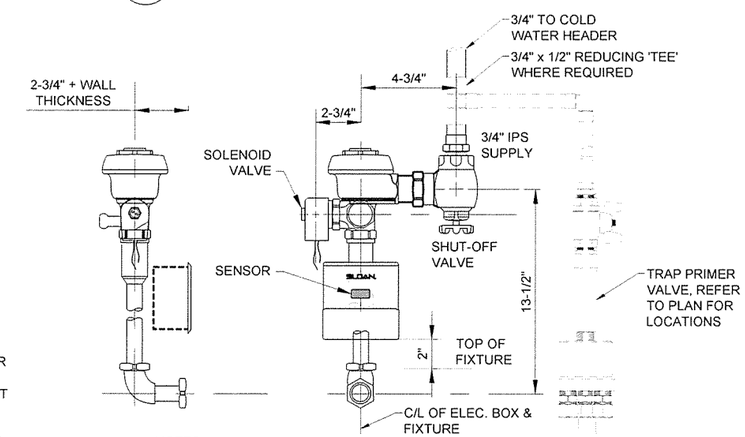


NOTES:

1. SENSOR LOCATION & POSITIONING ARE CRITICAL! FAILURE TO PROPERLY POSITION THE ELECTRICAL BOXES TO THE PLUMBING ROUGH-IN WILL RESULT IN IMPROPER INSTALLATION AND IMPAIR SENSOR PERFORMANCE. ALL TRADESMEN (PLUMBERS, ELECTRICIANS, MASONS, ETC.) INVOLVED WITH THE INSTALLATION OF THIS PRODUCT MUST COORDINATE THEIR WORK TO ASSURE PROPER SENSOR OPERATION.

## URINAL FLUSH VALVE DETAIL

8 / P-501 SCALE: NONE

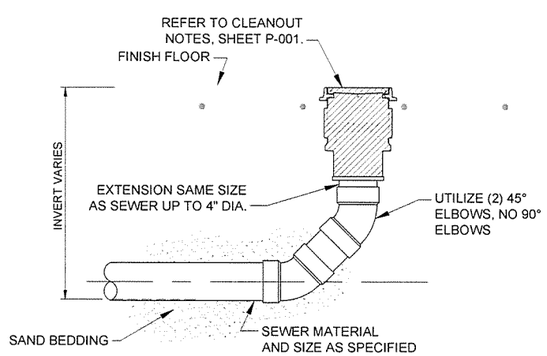


## FLOOR CLEANOUT (FCO) DETAIL

3 / P-501 SCALE: NONE

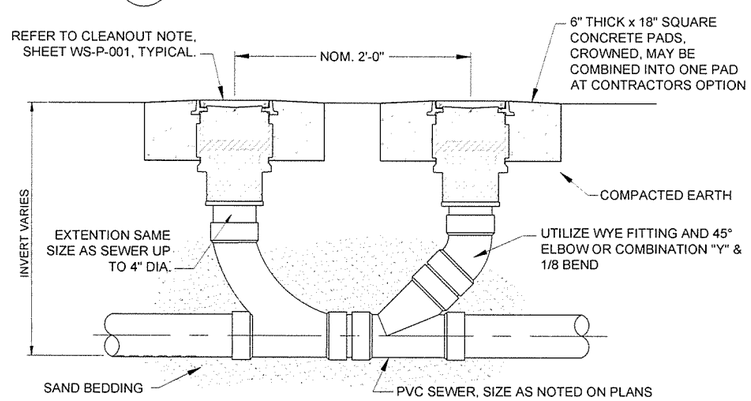


NOTES:

1. OMIT CONCRETE PAD(S) WHERE TWCOTG IS LOCATED AT SIDEWALK. INSTALL CO's TOP FLUSH WITH FINISH CONCRETE.

## TWO-WAY CLEANOUT TO GRADE (TWCOTG) DETAIL

6 / P-501 SCALE: NONE

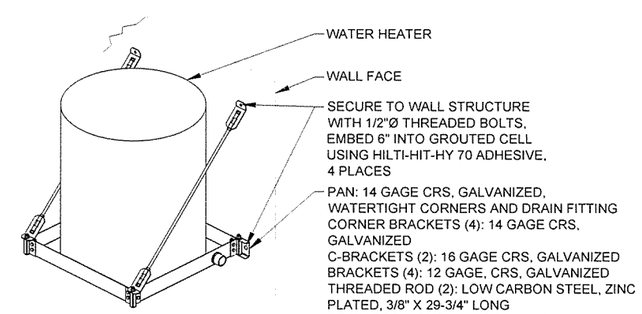


## WATER HEATER MOUNTING DETAIL

9 / P-501 SCALE: NONE


GARVER
4701 Northshore Drive
N Little Rock, AR 72118
501-376-3633
www.GarverUSA.com


CERTIFICATE OF AUTHORIZATION GARVER LLC No. 766 ARKANSAS-ENGINEER

STATE OF ARKANSAS LICENSED PROFESSIONAL ENGINEER No. 11074 LEE E. SUGGS 9/30/15

| Symbol | Description | Date | Appr. |
|---|---|---|---|
| IFC | ISSUED FOR CONSTRUCTION | 10/1/15 | JRR |

| | | | |
|---|---|---|---|
| Designed by K. SULLIVAN | Submitted by John T. Walters, III, PE, SE Director, Federal Services | Job Number 060451 | |
| Drawn by K. SULLIVAN | Plot Date 9/29/15 | Plot Scale 1:1 | N/A |
| Checked by B. BRADSHAW | Dwg Code - | N/A | |
| File Name AH15WR-P-501.DWG | | N/A | |

ARKANSAS HIGHWAY AND TRANSPORTATION DEPARTMENT
ARKANSAS TOURIST INFORMATION CENTER
(WHITE RIVER) (S)
JOB 061451

DETAILS I

Sheet Reference Number:

P-501

Sheet 112 of 130

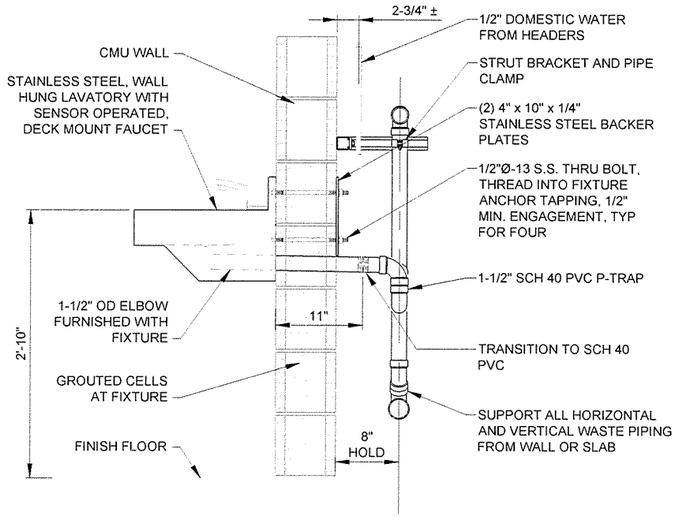


1 P-502 SECTION THRU TYPICAL WALL HUNG LAVATORY

SCALE: NONE

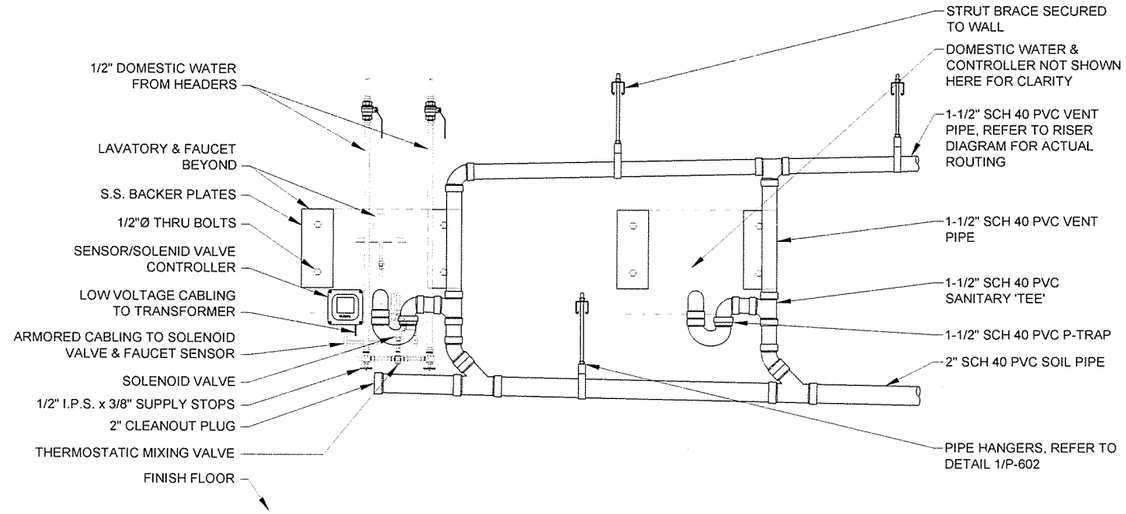


2 P-502 ELEVATION VIEW FROM UTILITY CHASE @ WALL HUNG LAVATORIES

SCALE: NONE

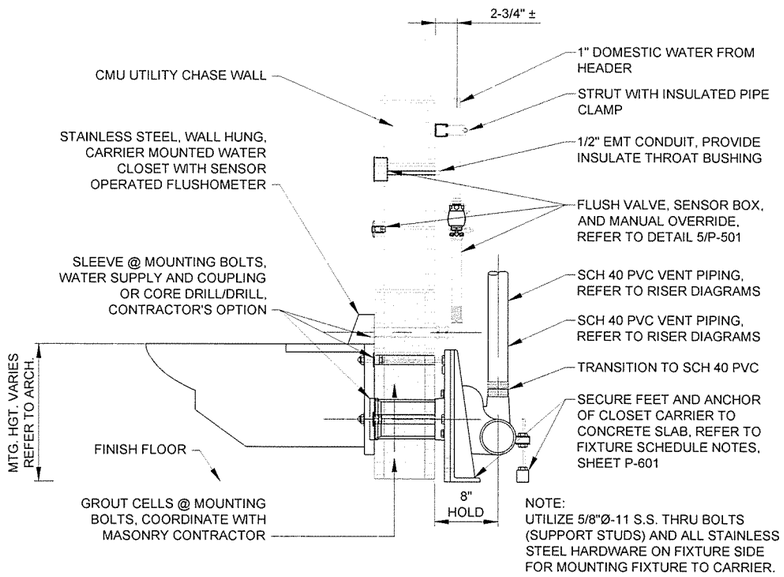


NOTE:
UTILIZE 5/8"Ø-11 S.S. THRU BOLTS (SUPPORT STUDS) AND ALL STAINLESS STEEL HARDWARE ON FIXTURE SIDE FOR MOUNTING FIXTURE TO CARRIER.

3 P-502 SECTION THRU TYPICAL WALL HUNG, CARRIER MOUNTED WATER CLOSET

SCALE: NONE

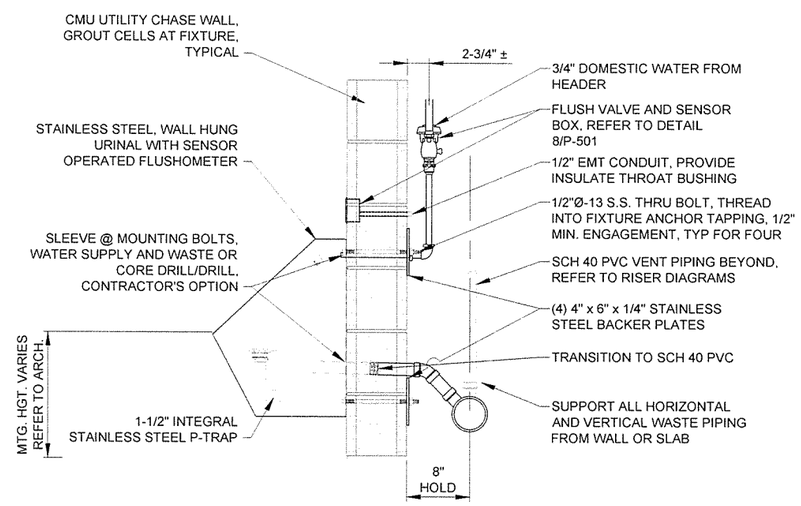


4 P-502 SECTION THRU TYPICAL WALL HUNG URINAL

SCALE: NONE

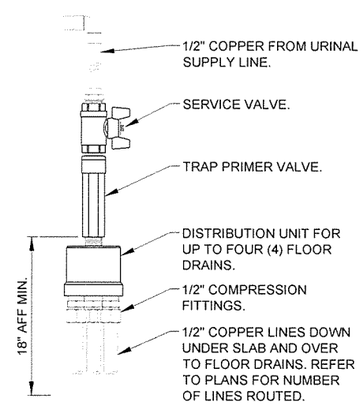


NOTES:

1. INSTALLATION OF TPV-2 @ LAVATORY IS SIMILAR. TPV-2 DOES NOT HAVE A DISTRIBUTION UNIT.

5 P-502 TRAP PRIMER VALVE TPV-1 DETAIL

SCALE: NONE

GARVER
4701 Northshore Drive
N Little Rock, AR 72118
501-376-3633
www.GarverUSA.com

CERTIFICATE OF AUTHORIZATION GARVER LLC No. 766 ARKANSAS ENGINEER

STATE OF ARKANSAS LICENSED PROFESSIONAL ENGINEER No. 14074 LEE E. SUGGS 10/30/15

| Symbol | Description | Date | Appr. |
|---|---|---|---|
| IFC | ISSUED FOR CONSTRUCTION | 10/11/15 | JRR |

Submitted by: John T. Vaught III, PE, SE, Director, Federal Services
Job Number: 060451
Designed by: K. SULLIVAN | Plot Date: 9/28/15 | Plot Scale: 1:1 | N/A
Drawn by: K. SULLIVAN | Drwg Code: - | N/A
Checked by: B. BRADSHAW | - | N/A
File Name: AH15WR-P-502.DWG

ARKANSAS HIGHWAY AND TRANSPORTATION DEPARTMENT
ARKANSAS TOURIST INFORMATION CENTER
(WHITE RIVER) (S)
JOB 061451

DETAILS II

Sheet Reference Number:
P-502

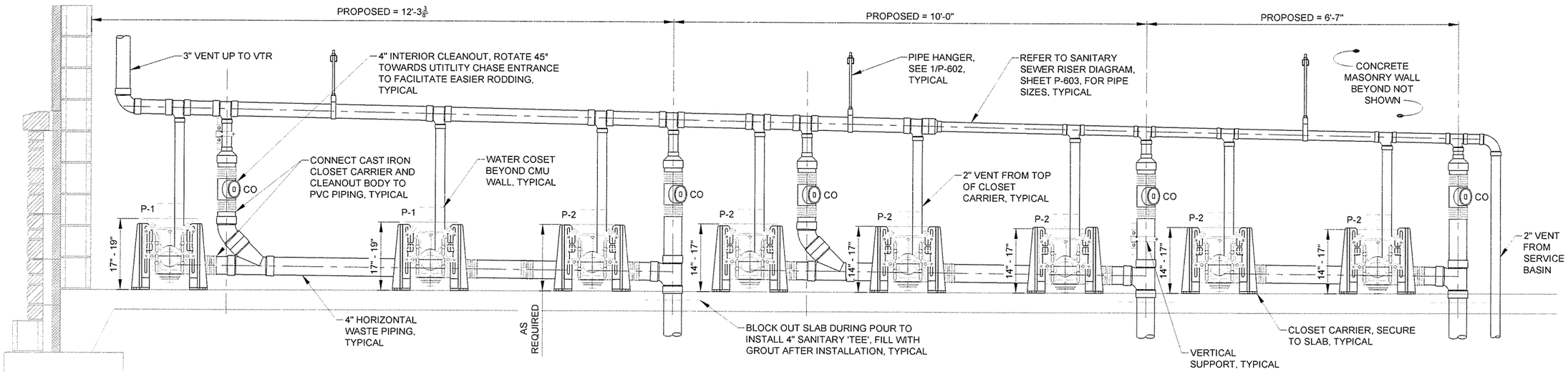


1 / P-503 ELEVATION VIEW FROM UTILITY CHASE @ CARRIER MOUNTED WATER CLOSETS

SCALE: NONE

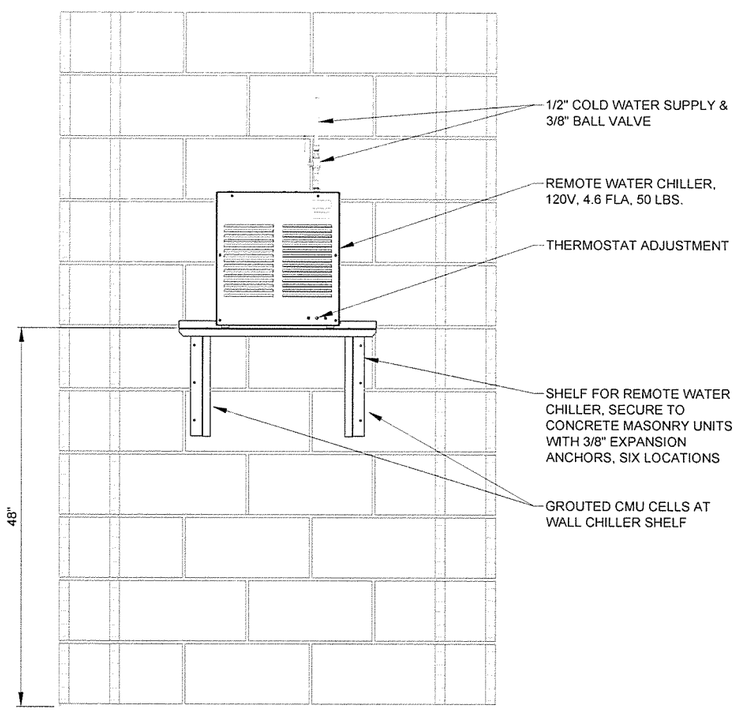


2 / P-503 ELEVATION @ TYPICAL REMOTE WATER CHILLER

SCALE: NONE

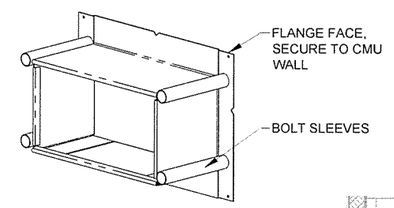


PARTIAL ISO BLOW-UP OF WALL SLEEVE

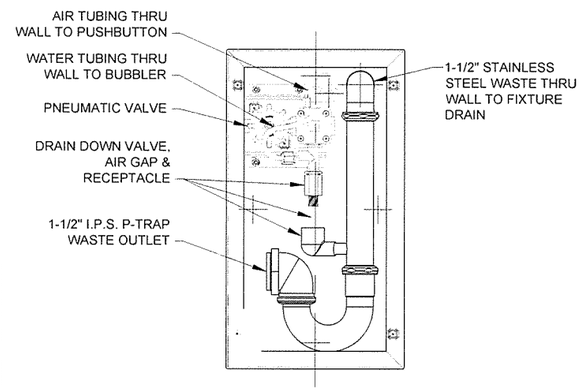


FREEZE BOX BLOW-UP

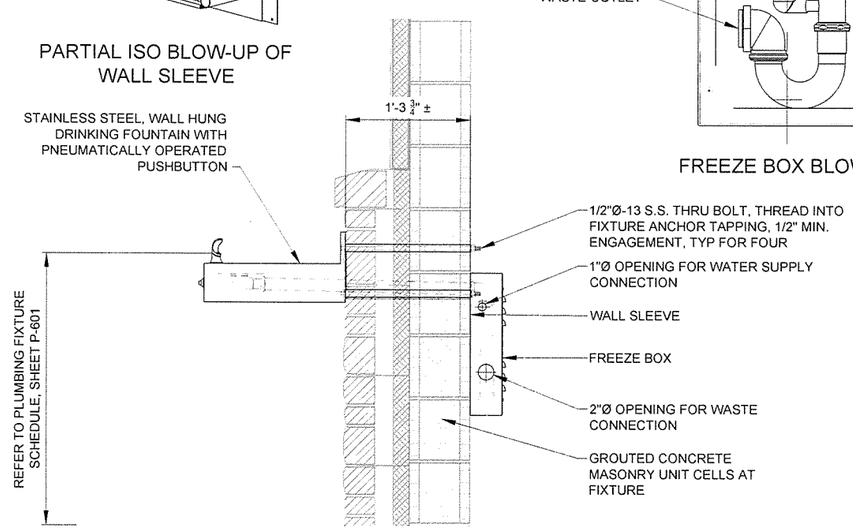


3 / P-503 SECTION THRU TYPICAL DRINKING FOUNTAIN

SCALE: NONE

GARVER
4701 Northshore Drive
N Little Rock, AR 72118
501-376-3633
www.GarverUSA.com

CERTIFICATE OF AUTHORIZATION
GARVER LLC
No. 766
ARKANSAS ENGINEER

STATE OF ARKANSAS
LICENSED PROFESSIONAL ENGINEER
No. 11074
LEE E. SUGGS
9/30/15

| IFC Symbol | ISSUED FOR CONSTRUCTION Description | 10/1/15 Date | JRR Appr. |
|---|---|---|---|

Job Number 060451

Submitted by: John T. Watkins, III, PE, SE Director, Federal Services

Plot Scale 1:1

Plot Date 9/29/15

Drwg Code

Designed by: K SULLIVAN

Drawn by: K SULLIVAN

Checked by: B BRADSHAW

File Name AH15WR-P-503.DWG

ARKANSAS HIGHWAY AND TRANSPORTATION DEPARTMENT
ARKANSAS TOURIST INFORMATION CENTER
(WHITE RIVER) (S)
JOB 061451

DETAILS III

Sheet Reference Number:

P-503

## PLUMBING FIXTURE SCHEDULE TOURIST INFORMATION CENTER & TRUCKER'S VENDING BUILDING

| MARK | DESCRIPTION | MFGR. & MODEL | FAUCETS, FITTINGS AND ACCESSORIES | TRAP | WASTE | COLD | HOT | REMARKS | NOTES |
|---|---|---|---|---|---|---|---|---|---|
| P-1 | ADA COMPLIANT WATER CLOSET | ACORN ENGINEERING 2105-W-1-HET-1.28 GPF-FVBO-FG | FABRICATED, 14 GAGE, TYPE 304 STAINLESS STEEL, WALL HUNG, CLOSET CARRIER MOUNTED, ELONGATED, BACK SPUD, SIPHON JET, WALL OUTLET, 1.28 GPF. FURNISH WITH SLOAN VALVE 152-1.28 ES-S TMO CONCEALED, SENSOR ACTIVATED FLUSHOMETER WITH TRUE MECHANICAL OVERRIDE AND EL-154 TRANSFORMER (120 VAC/24 VAC 50 VA), ZURN Z1203-N-XH-VP EXTRA HEAVY-DUTY ADJUSTABLE CLOSET CARRIER WITH VANDAL PROOF TRIM. INSTALLATION OF WATER CLOSET IS FOR 8 INCH THICK CONCRETE MASONRY WALL. | INTEGRAL | 4" | 1" | - | SATIN FINISH . VERIFY MOUNTING HEIGHT WITH ARCHITECTURAL INTERIOR ELEVATIONS. | 1, 2 |
| P-2 | WATER CLOSET | ACORN ENGINEERING 2105-W-1-HET-1.28 GPF-FVBO-FG | FABRICATED, 14 GAGE, TYPE 304 STAINLESS STEEL, WALL HUNG, CLOSET CARRIER MOUNTED, ELONGATED, BACK SPUD, SIPHON JET, WALL OUTLET, 1.28 GPF. FURNISH WITH SLOAN VALVE 152-1.28 ES-S TMO CONCEALED, SENSOR ACTIVATED FLUSHOMETER WITH TRUE MECHANICAL OVERRIDE, ZURN Z1203-N-XH-VP EXTRA HEAVY-DUTY ADJUSTABLE CLOSET CARRIER WITH VANDAL PROOF TRIM. INSTALLATION OF WATER CLOSET IS FOR 8 INCH THICK CONCRETE MASONRY WALL. | INTEGRAL | 4" | 1" | - | SATIN FINISH . VERIFY MOUNTING HEIGHT WITH ARCHITECTURAL INTERIOR ELEVATIONS. | 1, 2 |
| P-3 | ADA COMPLIANT URINAL | ACORN ENGINEERING 1709HEU-W-1-0.125-FVBO-MT | FABRICATED, 18 GAGE WITH 16 GAGE BOWL, TYPE 304 STAINLESS STEEL, WALL HUNG, BACK OUTLET, BACK SPUD, 0.125 GPF, METAL MOUNTING TEMPLATE, INTEGRAL 1-1/2 INCH STAINLESS STEEL P-TRAP. FURNISH WITH SLOAN VALVE 195 ES-S CONCEALED, SENSOR ACTIVATED FLUSHOMETER. INSTALLATION OF URINAL IS FOR 8 INCH THICK CONCRETE MASONRY WALL. | 1-1/2" | 2 | 3/4" | - | SATIN FINISH . VERIFY MOUNTING HEIGHT WITH ARCHITECTURAL INTERIOR ELEVATIONS. | 1, 3 |
| P-4 | URINAL | ACORN ENGINEERING 1709HEU-W-1-0.125-FVBO-MT | FABRICATED, 18 GAGE WITH 16 GAGE BOWL, TYPE 304 STAINLESS STEEL, WALL HUNG, BACK OUTLET, BACK SPUD, 0.125 GPF, METAL MOUNTING TEMPLATE, INTEGRAL 1-1/2 INCH STAINLESS STEEL P-TRAP. FURNISH WITH SLOAN VALVE 195 ES-S CONCEALED, SENSOR ACTIVATED FLUSHOMETER. INSTALLATION OF URINAL IS FOR 8 INCH THICK CONCRETE MASONRY WALL. | 1-1/2" | 2" | 3/4" | - | SATIN FINISH . VERIFY MOUNTING HEIGHT WITH ARCHITECTURAL INTERIOR ELEVATIONS. | 1, 3 |
| P-5 | ADA COMPLIANT LAVATORY | ACORN ENGINEERING 1652LRB-1-DMS-9-H34-MT-LWE- | FABRICATED, 14 GAGE, TYPE 304 STAINLESS STEEL, WALL HUNG, WITH 3 HOLE PUNCHED DECK (2 INCHES ON CENTER, COORDINATE WITH VALVE SPECIFIED/SUBMITTED), METAL MOUNTING TEMPLATE, INTEGRAL 1-1/2 INCH STAINLESS STEEL P-TRAP WITH GRID STRAINER. FURNISH WITH SLOAN VALVE ETF-600 CHROME PLATED BRASS, SENSOR ACTIVATED, 4" CENTER-SET ELECTRONIC HAND WASHING FAUCET. 0.5 GPM, WITH 'BDT' BELOW DECK THERMOSTATIC MIXING VALVE AND EL-208 TRANSFORMER (120 VAC/24 VAC 100 VA), McGUIRE ST02 1/2" IPS x 3/8" O.D. SUPPLY STOPS. INSTALLATION OF LAVATORY IS FOR 8 INCH THICK CONCRETE MASONRY WALL. | 1-1/2" | 2 | 1/2" | 1/2" | SATIN FINISH . INSTALL WITH TOP OF APRON @ 34" AFF. | 3, 4 |
| P-6 | ADA COMPLIANT DRINKING FOUNTAIN | ACORN ENGINEERING 1672-1-BC-03-FP-MT-SW | FABRICATED, 14 GAGE, TYPE 304 STAINLESS STEEL, WALL HUNG, WITH DECK MOUNTED CODE COMPLIANT BUBBLER, AIR-CONTROL, SINGLE TEMPERATURE, NON-METERING VALVE, FREEZE RESISTANT BOX WITH DRAIN DOWN VALVE, METAL MOUNTING TEMPLATE, AND WALL SLEEVE. FURNISH ACORN A9100080-A-SRC REMOTE WATER CHILLER (120V, 4.6A) WITH SHELF FOR REMOTE MOUNTING. INSTALLATION OF DRINKING FOUNTAIN IS FOR 16 INCH THICK WALL CONSISTING OF CONCRETE MASONRY, INSULATION/AIR GAP, AND STONE VENEER. | 1-1/2" | 2" | 1/2" | - | SATIN FINISH . INSTALL WITH BUBBLER HEIGHT @ 34-1/2"(±) ABOVE FINISH GRADE. | 3,5,6 |
| P-7 | ADA COMPLIANT DRINKING FOUNTAIN | ACORN ENGINEERING 1672-1-BC-03-FP-MT-SW | FABRICATED, 14 GAGE, TYPE 304 STAINLESS STEEL, WALL HUNG, WITH DECK MOUNTED CODE COMPLIANT BUBBLER, AIR-CONTROL, SINGLE TEMPERATURE, NON-METERING VALVE, FREEZE RESISTANT BOX WITH DRAIN DOWN VALVE, METAL MOUNTING TEMPLATE, AND WALL SLEEVE. FURNISH ACORN A9100080-A-SRC REMOTE WATER CHILLER (120V, 4.6A) WITH SHELF FOR REMOTE MOUNTING. INSTALLATION OF DRINKING FOUNTAIN IS FOR 16 INCH THICK WALL CONSISTING OF CONCRETE MASONRY, INSULATION/AIR GAP, AND STONE VENEER. | 1-1/2" | 2" | 1/2" | - | SATIN FINISH . INSTALL WITH BUBBLER HEIGHT @ 40-1/2"(±) ABOVE FINISH GRADE. | 3,5,6 |
| P-8 | MOP SERVICE BASIN | STERN WILLIAMS SBC-1425-BP | CORNER STYLE, 32" x #@" x 12", COMPOSED OF PEARL GREY MARBLE CHIPS AND WHITE PORTLAND CEMENT, INTEGRAL CAST BRASS DRAIN WITH STAINLESS STEEL STRAINER, 20 GAGE, TYPE 304 STAINLESS STEEL SPLASH CATCHER PANELS FURNISH WITH #T-35 HOSE AND WALL HOOK, #T-40 MOP HANGER AND #BP STAINLESS STEEL SPLASH GUARDS, AND CHICAGO FAUCETS 835-XKCP SURFACE MOUNTED SERVICE SINK FAUCET WITH VACUUM BREAKER,CROSS HANDLES, WALL BRACKET SUPPORT ROD, PAIL HOOK, AND 3/4 HOSE THREAD OUTLET. | 3" | 3" | 1/2" | 1/2" | INTALL FAUCET AT 42" AFF. INSTALL MOP HANGER AND HOSE WALL HOOK ON ADJACENT WALL PER MANUFACTURER'S INSTRUCTIONS. | |

**NOTES:**

1. TRANSFORMER SPECIFIED WITH P-1 WILL POWER UP TO TEN (10) WATER CLOSETS OR URINALS OR ANY COMBINATION THEREOF, NOT TO EXCEED TEN FIXTURES.
2. ENSURE CLOSET CARRIER FEET AND ANCHOR ARE BOLTED TO FLOOR SLAB USING ANCHORS CAPABLE OF ACHIEVING PULL-OUT FORCE OF 805 LBS. EACH (FOUR LOCATIONS @ EACH CARRIER).
3. ONLY ONE METAL MOUNTING TEMPLATE WILL BE REQUIRED FOR INSTALLATION PURPOSES.
4. TRANSFORMER SPECIFIED WITH P-5 WILL POWER UP TO SIX (6) LAVATORY SENSOR CONTROLLERS.
5. INSTALL REMOTE CHILLER ON SHELF SPECIFIED AT 48" AFF MINIMUM TO ALLOW CLEAR FLOOR SPACE WITHIN UTILITY CHASE.
6. ONLY ONE CHILLER SHALL BE REQUIRED AT TRUCKER'S VENDING BUILDING WHERE P-6 & P-7 ARE MOUNTED SIDE BY SIDE.

## DOMESTIC WATER HEATER SCHEDULE TOURIST INFORMATION CENTER & TRUCKER'S VENDING BUILDING

| MARK | DESCRIPTION | MFGR. & MODEL | STORAGE (GALLONS) | INPUT (KW) | MIN. THERMAL EFFICIENCY | VOLTAGE/ PHASE | OUTLET (DEG. F) | ELEC. REQUIREMNTS | RECOVERY (GALLONS/HR.) | REMARKS | NOTES |
|---|---|---|---|---|---|---|---|---|---|---|---|
| EWH-1<br>EWH-2<br>EWH-3<br>EWH-4 | ELECTRIC WATER HEATER | WHIRLPOOL E1F6US017V | 6 | 1650 | N/A | 120/1 | 135 | FLEXIBLE CONNECTION WITH DISCONNECT | N/A | FURNISH WITH OATEY 34160 PLASTIC DRAIN PAN WITH 1" PVC DRAIN CONNECTION, DIELECTRIC UNIONS, HOT & COLD WATER SHUT-OFF VALVES, AND APPROVED T & P RELIEF VALVE (PIPE FULL-SIZE DISCHARGE DOWN INTO DRAIN PAN, PROVIDE AIR GAP). | 1, 4, 5,7 |
| EWH-5<br>EWH-6 | ELECTRIC WATER HEATER | WHIRLPOOL E1F6US017V | 6 | 1650 | N/A | 120/1 | 135 | FLEXIBLE CONNECTION WITH DISCONNECT | N/A | FURNISH WITH HOLD-RITE #40-SWHP-W WALL MOUNTED EQUIPMENT PLATFORM/INTEGRAL DRAIN PAN WITH 1" PVC DRAIN CONNECTION AND ALL MOUNTING HARDWARE, DIELECTRIC UNIONS, HOT & COLD WATER SHUT-OFF VALVES, AND APPROVED T & P RELIEF VALVE (PIPE FULL-SIZE DISCHARGE INTO INTEGRAL PAN, PROVIDE AIR GAP). | 1, 2, 3, 4, 6, 7 |

**NOTES:**

1. CONTRACTOR SHALL SET OUTLET TEMPERATURE ON WATER HEATER.
2. CONTRACTOR SHALL COORDINATE WALL MOUNTED EQUIPMENT PLATFORM WITH MASONRY CONTRACTOR TO ENSURE CMU CELLS ARE GROUTED FOR EMBEDDING SECURING BOLTS.
3. CONTRACTOR SHALL ROUTE PAN DRAIN FOR DOWN TO SERVICE BASIN IN CORNER OF UTILITY CHASE.
4. CONTRACTOR SHALL COORDINATE WITH ELECTRICAL CONTRACTOR TO ENSURE SUFFICIENT LENGTH OF FLEXIBLE CONDUIT IS INSTALLED TO ALLOW FOR FUTURE REMOVAL AND REPLACEMENT OF WATER HEATER.
5. INSTALL WATER HEATER ON FLOOR IN UTILITY CHASE. ROUTE 1" PVC PAN DRAIN ALONG WALL UNDER WASTE PIPING TOWARDS FLOOR DRAIN AND TURN OUT. THE DESIGN INTENT IS TO KEEP THE PAN DRAIN PIPE UNDER PIPING IN CHASE AND TO NOT IMPEDE FOOT TRAFFIC.
6. INSTALL WATER HEATER AND STAND AT MAXIMUM MOUNTING HEIGHT TO PROVIDE CLEAR HEAD ROOM UNDER STAND.
7. FINAL CONNECTION TO WATER HEATER AT DIELECTRIC UNION SHALL BE MADE WITH SUFFICIENT LENGTH OF FLEXIBLE COPPER TUBING TO ALLOW FOR FUTURE REMOVAL AND REPLACEMENT OF WATER HEATER.


GARVER
4701 Northshore Drive
N Little Rock, AR 72118
501-376-3633
www.GarverUSA.com


CERTIFICATE OF AUTHORIZATION GARVER LLC No. 766 ARKANSAS ENGINEER

STATE OF ARKANSAS LICENSED PROFESSIONAL ENGINEER No. 11074 LEE E. SUGGS 9/29/15

| Symbol | Description | Date | Appr |
|---|---|---|---|
| IFC | ISSUED FOR CONSTRUCTION | 10/1/15 | JRR |

Job Number 060-051
Submitted by John T. Vaught, III, PE, SE Director, Federal Services
Plot Scale 1:1
Designed by K SULLIVAN
Plot Date 9/29/15
Drawn by K SULLIVAN
Drwg Code -
Checked by B BRADSHAW
File Name AH15WR-P-601.DWG

ARKANSAS HIGHWAY AND TRANSPORTATION DEPARTMENT
ARKANSAS TOURIST INFORMATION CENTER
(WHITE RIVER) (S)
JOB 051451

SCHEDULES I

Sheet Reference Number:

P-601

## PLUMBING EQUIPMENT SCHEDULE TOURIST INFFORMATION CENTER AND TRUCKER'S VENDING BUILDING

| MARK | DESCRIPTION | MFGR. & MODEL | SPECIFICATIONS | REMARKS |
|---|---|---|---|---|
| WH-1 | WALL HYDRANT | ZURN Z1300-WC | ENCASED, NON-FREEZE, ANTI-SIPHON, AUTOMATIC DRAINING, **16 INCH WALL THICKNESS**, FURNISHED WITH NON-FREEZE TYPE INTEGRAL BACKFLOW PREVENTER, BRONZE CASING, ALL BRONZE PARTS, NICKEL BRONZE BOX AND HINGED COVER WITH OPERATING KEY LOCK AND "WATER" CAST ON COVER, WALL CLAMP AND 3/4 INCH HOSE CONNECTION. | COORDINATE CONNECTION STYLE WITH FIELD CONDITIONS (OPTIONS 34FS OR 34UN). INSTALL AT 18" AFF. |
| WH-2 | WALL HYDRANT | ZURN Z1300-PB-WC | ENCASED, NON-FREEZE, ANTI-SIPHON, AUTOMATIC DRAINING, **8 INCH WALL THICKNESS**, FURNISHED WITH NON-FREEZE TYPE INTEGRAL BACKFLOW PREVENTER, BRONZE CASING, ALL BRONZE PARTS, BRONZE BOX WITH POLISHED BRONZE FACE AND HINGED COVER WITH OPERATING KEY LOCK AND "WATER" CAST ON COVER, WALL CLAMP AND 3/4 INCH HOSE CONNECTION. | COORDINATE CONNECTION STYLE WITH FIELD CONDITIONS (OPTIONS 34FS OR 34UN). INSTALL AT 18" AFF. |
| TPV-1 | TRAP PRIMER VALVE | PRECISION PLUMBING PRODUCTS P1-500 | ALL BRASS AUTOMATIC PRESSURE DROP ACTIVATED, FURNISH WITH DU-4 DISTRIBUTION UNIT AND SERVICE VALVE. CONNECT TO URINAL COLD WATER SUPPLY. | REFER TO DETAILS FOR ADDITIONAL INSTALLATION REQUIREMENTS. |
| TPV-2 | TRAP PRIMER VALVE | PRECISION PLUMBING PRODUCTS P2-500 | ALL BRASS AUTOMATIC PRESSURE DROP ACTIVATED. CONNECT TO LAVATORY COLD WATER SUPPLY. | |
| | | | | |

## FLOOR DRAIN SCHEDULE

| MARK | DESCRIPTION | MFGR. & MODEL | SPECIFICATIONS | REMARKS |
|---|---|---|---|---|
| FD-1 | FLOOR DRAIN | ZURN Z415BZ-P-VP | CAST IRON BODY WITH BOTTOM OUTLET, 6-1/4 INCH DIAMETER NICKEL BRONZE LEVELING STRAINER, 3 INCH OUTLET, TRAP PRIMER CONNECTION, VANDAL PROOF TOP. | INSTALL STRAINER FLUSH WITH FINISH FLOOR. |
| FD-2 | FLOOR DRAIN | ZURN Z415BZ-OF-P-VP | CAST IRON BODY WITH BOTTOM OUTLET, 6-1/4 INCH DIAMETER NICKEL BRONZE LEVELING STRAINER, 3 INCH OUTLET, OVAL FUNNEL, TRAP PRIMER CONNECTION, VANDAL PROOF TOP. | INSTALL STRAINER FLUSH WITH FINISH FLOOR. |


GARVER
4701 Northshore Drive
N Little Rock, AR 72118
501-376-3633
www.GarverUSA.com


CERTIFICATE OF AUTHORIZATION
GARVER LLC
No. 766
ARKANSAS ENGINEER

STATE OF ARKANSAS
LICENSED PROFESSIONAL ENGINEER
No. 11074
LEE E. SUGGS
9/29/15

| Symbol | Description | Date | Appr |
|---|---|---|---|
| IFC | ISSUED FOR CONSTRUCTION | 10/1/15 | JRR |

Submitted by
John T Williams, III, PE, SE
Director, Federal Services

Job Number 060451

Designed by J RAMSEY | Plot Date 9/29/15 | Plot Scale 1:1 | N/A | N/A

Drawn by J DEMAINE | Drwg Code: - | N/A

Checked by G ARCHER | File Name AHTSWR-P-602.DWG

ARKANSAS HIGHWAY AND TRANSPORTATION DEPARTMENT
ARKANSAS TOURIST INFORMATION CENTER
(WHITE RIVER) (S)
JOB 061451

SCHEDULES II

Sheet Reference Number:

P-602

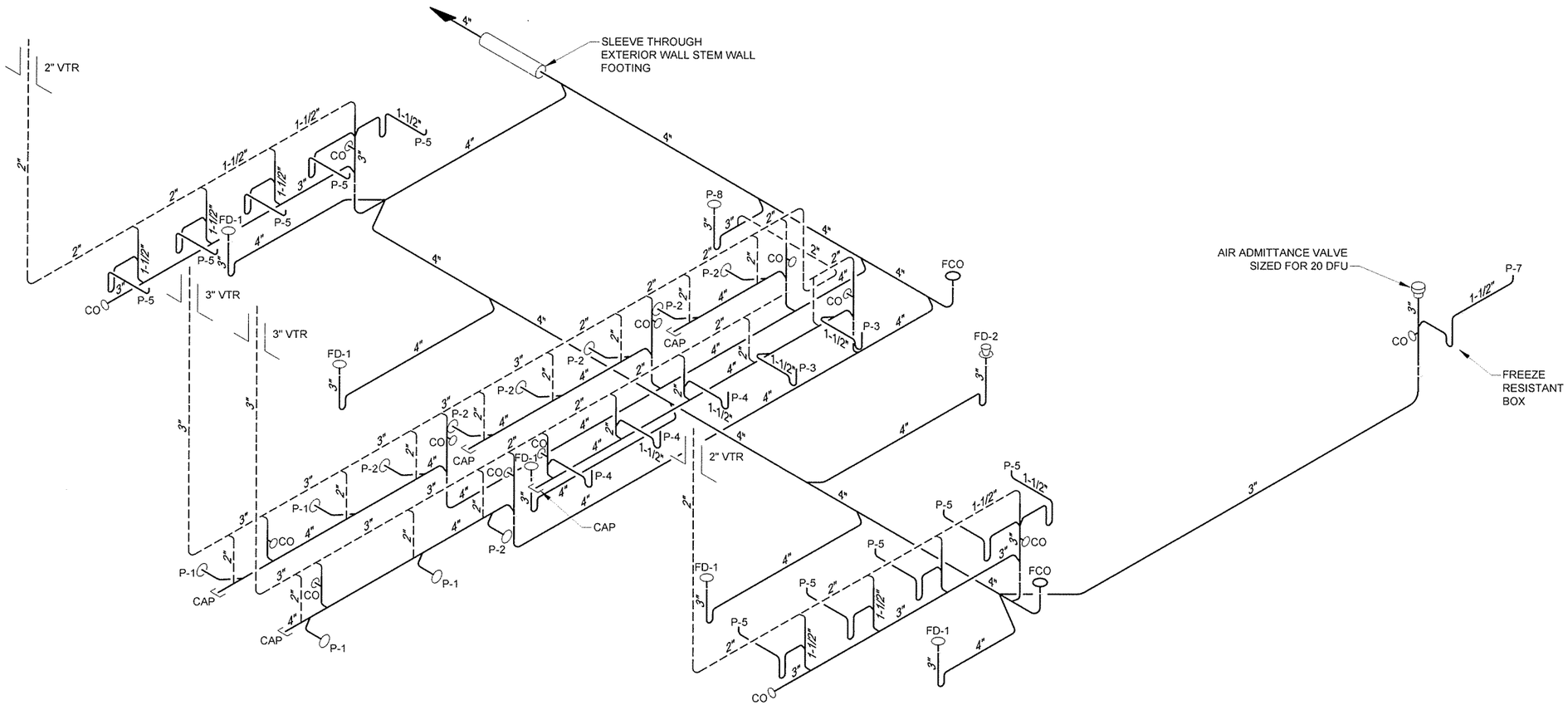


1
P-603

## TOURIST INFORMATION CENTER - SANITARY SEWER RISER DIAGRAM

SCALE: NONE

NOTE: OPPOSITE SIDE OF STRUCTURE RISER DIAGRAM IS SIMILAR, OPPOSITE HAND.


GARVER
4701 Northshore Drive
N Little Rock, AR 72118
501-376-3633
www.GarverUSA.com


CERTIFICATE OF AUTHORIZATION
GARVER LLC
No. 766
ARKANSAS ENGINEER

STATE OF ARKANSAS
LICENSED PROFESSIONAL ENGINEER
No. 11074
LEE E. SUGGS
9/7/15

| Symbol | Description | Date | Appr. |
|---|---|---|---|
| IFC | ISSUED FOR CONSTRUCTION | 10/1/15 | JRR |

Submitted by: John T. Watkins, III PE, SE, Director, Federal Services
Job Number: 060451
Designed by: K. SULLIVAN
Plot Scale: 1:1
Drawn by: K. SULLIVAN
Plot Date: 9/29/15
Checked by: B. BRADSHAW
Dwg Code: -
File Name: AHTSWR-P-603.DWG

ARKANSAS HIGHWAY AND TRANSPORTATION DEPARTMENT
ARKANSAS TOURIST INFORMATION CENTER
(WHITE RIVER) (S)
JOB 061451

RISER DIAGRAMS I

Sheet Reference Number:
P-603

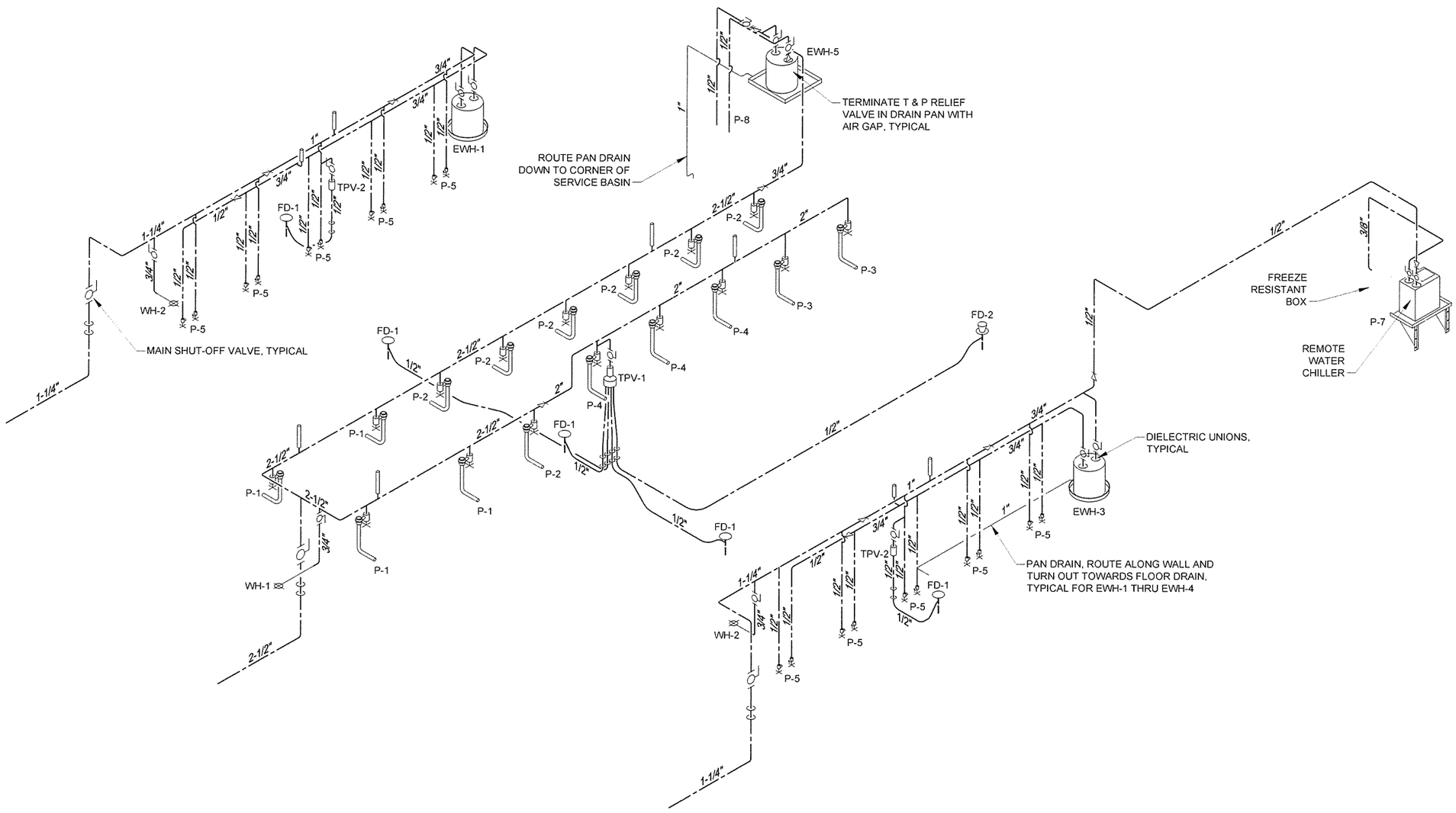


1 / P-604 TOURIST INFORMATION CENTER - DOMESTIC WATER RISER DIAGRAM

SCALE: NONE

NOTE: OPPOSITE SIDE OF STRUCTURE RISER DIAGRAM IS SIMILAR, OPPOSITE HAND.

GARVER
4701 Northshore Drive
N Little Rock, AR 72118
501-376-3633
www.GarverUSA.com

CERTIFICATE OF AUTHORIZATION
GARVER LLC
No. 766
ARKANSAS-ENGINEER

STATE OF ARKANSAS
LICENSED PROFESSIONAL ENGINEER
No. 11074
LEE E. SUGGS

| IFC Symbol | ISSUED FOR CONSTRUCTION Description | 10/1/15 Date | JRR Appr |
|---|---|---|---|

Designed by: K SULLIVAN
Drawn by: K SULLIVAN
Checked by: B BRADSHAW
Submitted by: John T. Watkins, III, PE, SE Director, Federal Services
Plot Date: 9/29/15
Plot Scale: 1:1
Dwg Code: -
File Name: AH15WR-P-604.DWG
Job Number: 060451
N/A
N/A
N/A

ARKANSAS HIGHWAY AND TRANSPORTATION DEPARTMENT
ARKANSAS TOURIST INFORMATION CENTER
(WHITE RIVER) (S)
JOB 061451

RISER DIAGRAMS II

Sheet Reference Number:
P-604

Sheet 118 of 130

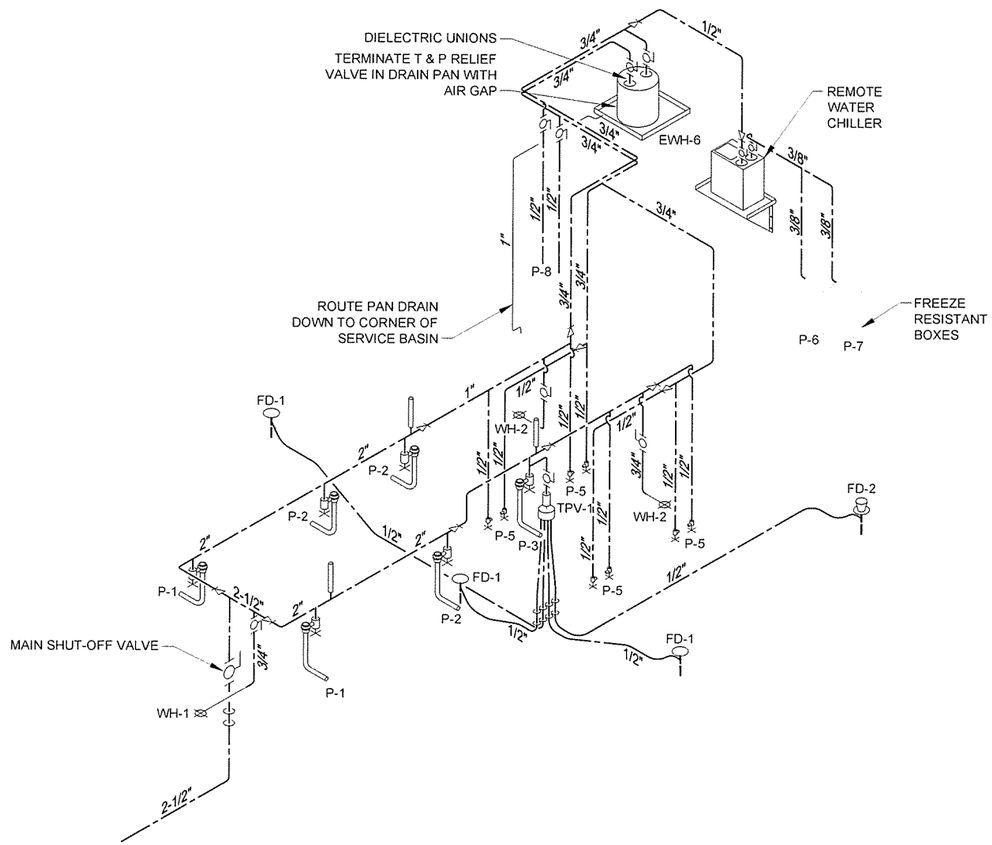


2
P-605

## TRUCKER-VENDING BUILDING - DOMESTIC WATER RISER DIAGRAM

SCALE: NONE

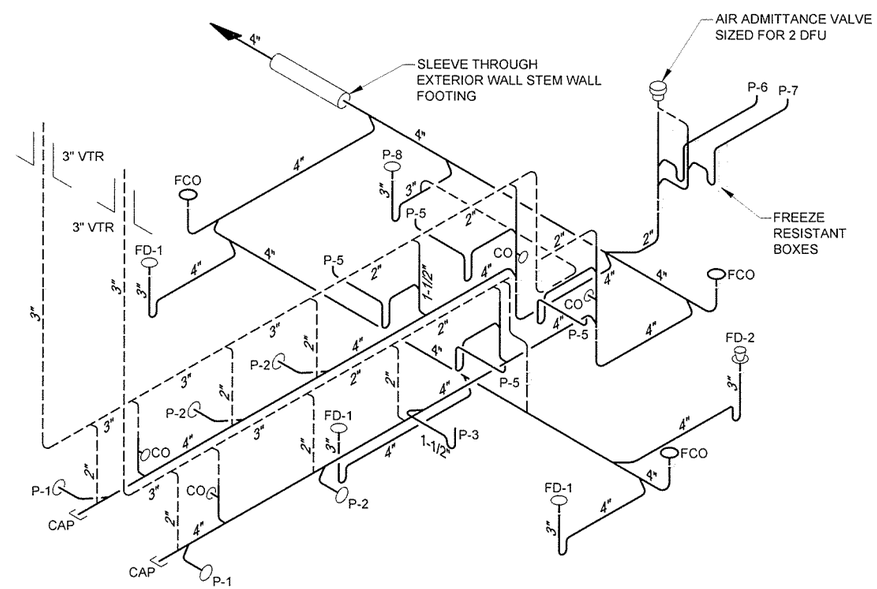


1
P-605

## TRUCKER-VENDING BUILDING - SANITARY SEWER RISER DIAGRAM

SCALE: NONE

GARVER
4701 Northshore Drive
N Little Rock, AR 72118
501-376-3633
www.GarverUSA.com

CERTIFICATE OF AUTHORIZATION
GARVER LLC
No. 766
ARKANSAS-ENGINEER

STATE OF ARKANSAS
LICENSED PROFESSIONAL ENGINEER
No. 11074
LEE E. SUGGS
9/30/15

| Symbol | Description | Date | Appr. |
|---|---|---|---|
| IFC | ISSUED FOR CONSTRUCTION | 10/1/15 | JRR |

Job Number: 060451
Submitted by: John T. Watkins, III, PE, SE, Director, Federal Services
Plot Date: 9/29/15
Plot Scale: 1:1
Designed by: K. SULLIVAN
Drawn by: K. SULLIVAN
Checked by: B. BRADSHAW
Drwg Code: -
File Name: AH15WR-P-605.DWG

ARKANSAS HIGHWAY AND TRANSPORTATION DEPARTMENT
ARKANSAS TOURIST INFORMATION CENTER
(WHITE RIVER) (S)
JOB 061451

RISER DIAGRAMS III

Sheet Reference Number:
P-605

## LIGHTING, POWER & SYSTEM LEGEND

- WALL MOUNTED FLUORESCENT LIGHT FIXTURE
- EL — FLUORESCENT LIGHT FIXTURE 1'x4'
- EL — FLUORESCENT LIGHT FIXTURE 2'x4'
- EL — FLUORESCENT LIGHT FIXTURE 2'x2'
- EL EL EL — FLUORESCENT LIGHT FIXTURE WITH EMERGENCY LIGHT (EL) BATTERY PACK, 1400 LUMENS MINIMUM FOR 2 LAMPS
- RECESSED LIGHT FIXTURE, UNLESS OTHERWISE SHOWN
- WALL MOUNTED LIGHT FIXTURE, MOUNTING HEIGHT AS INDICATED
- X X — LED EXIT LIGHT FIXTURE, CEILING MOUNTED, DARKENED AREA INDICATES FACE, ARROWS INDICATE DIRECTION OF EGRESS, STROBES AS INDICATED
- EM — BATTERY PACK EMERGENCY LIGHT FIXTURE WITH TWO LAMP HEADS
- EL — INDUSTRIAL STRIP FLUORESCENT LIGHT FIXTURE
- NON-FUSED DISCONNECT SWITCH, SIZE AS NOTED
- COMBINATION DISCONNECT AND MOTOR STARTER, SIZE AS NOTED, FUSED TYPE SHOWN
- FUSED DISCONNECT SWITCH, SIZE AS NOTED
- J J J — JUNCTION BOX, 42 CUBIC INCH MINIMUM CAPACITY
- S — LIGHT SWITCH, 120V, 20A, MTD 4'-0" AFF
- $S_3$ — LIGHT SWITCH, 120V, 20A, 3-WAY, MTD 4'-0" AFF
- $S_4$ — LIGHT SWITCH, 120V, 20A, 4-WAY, MTD 4'-0" AFF
- $S_{OS}$ — LIGHT SWITCH, LINE VOLTAGE, OCCUPANCY SENSOR TYPE, DUAL TECHNOLOGY, 2-POSITION, AUTO-ON, MANUAL-ON MTD 4'-0" AFF
- $S_M$ — MOTOR RATED SWITCH, 120V
- OS — CEILING MOUNTED LIGHT SWITCH, LINE VOLTAGE, OCCUPANCY SENSOR TYPE,
- PC — CEILING MOUNTED PHOTO SENSOR CONTROL
- 20 AMP DUPLEX RECEPTACLE, MTD 18" AFF, WITH #12 GROUND WIRE, "GFCI" INDICATES GROUND FAULT CIRCUIT INTERRUPTER, "WP" INDICATES WEATHERPROOF WHILE-IN-USE ENCLOSURE AND COVER, RECEPTACLES SHOWN IN "WP" ENCLOSURES SHALL BE WEATHER RESISTANT "WR" TYPE, "TR" INDICATES TAMPER-RESISTANT DEVICE, BOX INDICATES FLOOR OUTLET WITH RECESSED CAST JUNCTION BOX
- 20 AMP QUADPLEX RECEPTACLE, MTD 18" AFF
- ELECTRICAL PANEL OR EQUIPMENT CABINET, SURFACE MOUNTED, 5'-6" TO TOP OF ENCLOSURE
- # — HOME RUN TO PANEL IN DEDICATED CONDUIT, RECEPTACLES AND EQUIPMENT SHALL HAVE DEDICATED GREEN GROUND WIRE. NUMBER OF ARROWS INDICATES NUMBER OF PHASE CONDUCTORS, LETTER(S) INDICATE NAME OF PANEL, NUMBER(S) INDICATE CIRCUIT NUMBERS
- TELEPHONE OUTLET, SINGLE JACK WITH 3/4"C TO ABOVE LAY-IN CEILING OR CABLE TRAY
- DATA OUTLET, SINGLE JACK
- DATA OUTLET, BOX INDICATES FLOOR OUTLET WITH RECESSED CAST JUNCTION BOX, DUAL COMBINATION WITH (1) TELEPHONE AND (1) DATA JACK UNLESS OTHERWISE NOTED
- TELEVISION OUTLET, SINGLE JACK MTD 18" AFF WITH 3/4"C TO ABOVE LAY-IN CEILING OR CABLE TRAY UNLESS NOTED OTHERWISE
- T T1 — TRANSFORMER, IDENTIFIER SHOWN, REFER TO SCHEDULE FOR SIZE
- TRANSFORMER, RATINGS AS SHOWN
- 20A/3P — CIRCUIT BREAKER, TRIP RATING SHOWN, 3-POLE UNLESS NOTED OTHERWISE
- OR — 3/4"x10'-0" COPPER CLAD GROUND ROD
- CLOSED CIRCUIT (CCTV) CAMERA EXTERIOR MOUNTED
- CLOSED CIRCUIT (CCTV) CAMERA INTERIOR MOUNTED

## GENERAL NOTES:

1. SOME SYMBOLS OR ABBREVIATIONS MAY APPEAR ON THIS SHEET BUT NOT BE UTILIZED ON THE PROJECT.
2. LIGHTING LEGEND SHOWS EXAMPLE IDENTIFIERS, REFER TO LIGHT FIXTURE SCHEDULE FOR SPECIFIC REQUIREMENTS.

## ABBREVIATIONS

| | |
|---|---|
| A | AMP |
| ABC | ABOVE COUNTER |
| ACS | ACCESS CONTROL SYSTEM |
| ACU | AIR CONDITIONING UNIT |
| AFF | ABOVE FINISHED FLOOR |
| AFG | ABOVE FINISHED GRADE |
| AIC | AMPS INTERRUPTING CAPACITY |
| AHU | AIR HANDLING UNIT |
| AM | AMP-METER |
| AP | AERIAL PRIMARY |
| AS | AERIAL SECONDARY |
| ATS | AUTOMATIC TRANSFER SWITCH |
| AUX | AUXILIARY |
| BFI | BLOWN FUSE INDICATOR |
| BKR | BREAKER |
| C | CONDUIT |
| CB | CIRCUIT BREAKER |
| CGRS | PVC COATED GALVANIZED RIGID STEEL |
| CF/CI | CONTRACTOR FURNISHED/ CONTRACTOR INSTALLED |
| CKT | CIRCUIT |
| CL | CENTERLINE |
| COM | COMMON |
| CONT | CONTINUOUS |
| CP | CONTROL PANEL |
| CPT | CONTROL POWER TRANSFORMER |
| CR | CONTROL RELAY |
| CRI | COLOR RENDERING INDEX |
| CS | CORD SET |
| CU | COEFFICIENT OF UTILIZATION |
| CU | CONDENSING UNIT |
| DEB | DIRECT EARTH BURIED |
| EC | EMPTY OR EMBEDDED CONDUIT |
| EF | EXHAUST FAN |
| EG | EQUIPMENT GROUND |
| EL | EMERGENCY LIGHT |
| EMT | ELECTRICAL METALLIC TUBING |
| ETM | ELASPED TIME METER |
| FC | FAN COIL |
| FDS | FUSED DISCONNECT SWITCH |
| FLR | FLOOR |
| FOC | FIBER OPTIC CABLE |
| FS | FLOAT SWITCH |
| FT | FEET |
| FVNR | FULL VOLTAGE NON-REVERSING STARTER |
| FVR | FULL VOLTAGE REVERSING STARTER |
| GFCI | GROUND FAULT CIRCUIT INTERRUPTER |
| GF/CI | GOVERNMENT FURNISHED/ CONTRACTOR INSTALLED |
| GF/GI | GOVERNMENT FURNISHED/ GOVERNMENT INSTALLED |
| GND | GROUND |
| GRS | GALVANIZED RIGID STEEL |
| HOA | HAND-OFF-AUTO |
| HP | HORSEPOWER OR HEAT PUMP |
| HR | HOUR |
| IG | ISOLATED GROUND |
| ISP | INDIVIDUALLY SHIELDED PAIR |
| JB | JUNCTION BOX |
| kVA | KILOVOLT-AMPERE |
| kVAR | KILOVOLT-AMPERE, REACTIVE |
| kW | KILOWATT |
| LLF | LIGHT LOSS FACTOR |
| LO | LUGS ONLY |
| LOR | LOCAL-OFF-REMOTE |
| LV | LOW VOLTAGE |
| MCB | MAIN CIRCUIT BREAKER |
| MCC | MOTOR CONTROL CENTER |
| MCP | MOTOR CIRCUIT PROTECTOR |
| MFR | MANUFACTURER |
| MIN | MINIMUM |
| MLO | MAIN LUGS ONLY |
| MS | MOTOR STARTER |
| MTD | MOUNTED |
| N | NEUTRAL |
| NFDS | NON-FUSED DISCONNECT SWITCH |
| NL | NIGHT LIGHT |
| NTS | NOT TO SCALE |
| OC | ON CENTER |
| OF/CI | OWNER FURNISHED/ CONTRACTOR INSTALLED |
| OH | OVERHEAD |
| OHP | OVERHEAD PRIMARY |
| OHS | OVERHEAD SECONDARY |
| OL | OVERLOAD |
| PB | PUSH BUTTON |
| PEC | PHOTO ELECTRIC CELL |
| PF | POWER FACTOR |
| PFCC | POWER FACTOR CORRECTION CAPACITOR |
| PL | PILOT LIGHT |
| PMR | PHASE MONITOR RELAY |
| PNL | PANEL |
| PTT | PUSH-TO-TEST |
| PVC | SCHEDULE 40 POLYVINYL CONDUIT |
| RECPT | RECEPTACLE |
| RM | ROOM |
| S | SECOND |
| SDBC | SOFT DRAWN BARE COPPER |
| SE | SERVICE ENTRANCE |
| SHT | SHEET |
| SN | SOLID NEUTRAL |
| SPD | SURGE PROTECTIVE DEVICE |
| SS | STAINLESS STEEL |
| STA | STATION |
| SW | SWITCH |
| TEL | TELEPHONE |
| TD | TIME DELAY |
| THD | TOTAL HARMONIC DISTORTION |
| TMB | TELECOMMUNICATION MOUNTING BOARD |
| TYP | TYPICAL |
| TC | TIME CLOCK |
| TGB | TELECOMMUNICATION GROUNDING BAR |
| TMGB | TELECOMMUNICATION MAIN GROUNDING BAR |
| UG | UNDERGROUND |
| UGE | UNDERGROUND ELECTRIC |
| UGP | UNDERGROUND PRIMARY |
| UGS | UNDERGROUND SECONDARY |
| UH | UNIT HEATER |
| UNO | UNLESS NOTED OTHERWISE |
| UTP | UNSHIELDED TWISTED PAIR |
| V | VOLT |
| VA | VOLT-AMP |
| VFD | VARIABLE FREQUENCY DRIVE |
| VM | VOLT-METER |
| W | WATT OR WIRE |
| WH | WEATHER HEAD |
| WM | WATT METER |
| WP | WEATHERPROOF |
| W/ | WITH |
| XMFR | TRANSFORMER |

1 / E-001 LEGEND & ABBREVIATIONS

SCALE: NONE


GARVER
4701 Northshore Drive
N Little Rock, AR 72118
501-376-3633
www.GarverUSA.com


CERTIFICATE OF AUTHORIZATION — GARVER LLC No. 766 — ARKANSAS ENGINEER

STATE OF ARKANSAS — LICENSED PROFESSIONAL ENGINEER — No. 12569 — BRYAN TODD MELTON — 10/15/15

| Symbol | Description | Date | |
|---|---|---|---|
| IFC | ISSUED FOR CONSTRUCTION | 10/1/15 | JRR Appr |

Job Number 060451

Submitted by: John T Watkins, III, P.E., SE, Director, Federal Services

Designed by: B. MELTON | Plot Date: 9/29/15 | Plot Scale: 1:1

Drawn by: H. HOOVER | Drwg Code: - | Checked by: S. FEEZOR

File Name: AHISWR-E-001 DWG

ARKANSAS HIGHWAY AND TRANSPORTATION DEPARTMENT
ARKANSAS TOURIST INFORMATION CENTER
(WHITE RIVER) (S)
JOB 061451

LEGEND & ABBREVIATIONS

Sheet Reference Number: E-001

Sheet 120 of 130

## KEYED NOTES

1. REFER TO A-303 FOR MOUNTING HEIGHT. TYPICAL FOR TYPE A FIXTURES.
2. REFER TO A--308 FOR MOUNTING HEIGHT. TYPICAL FOR TYPE L FIXTURES.

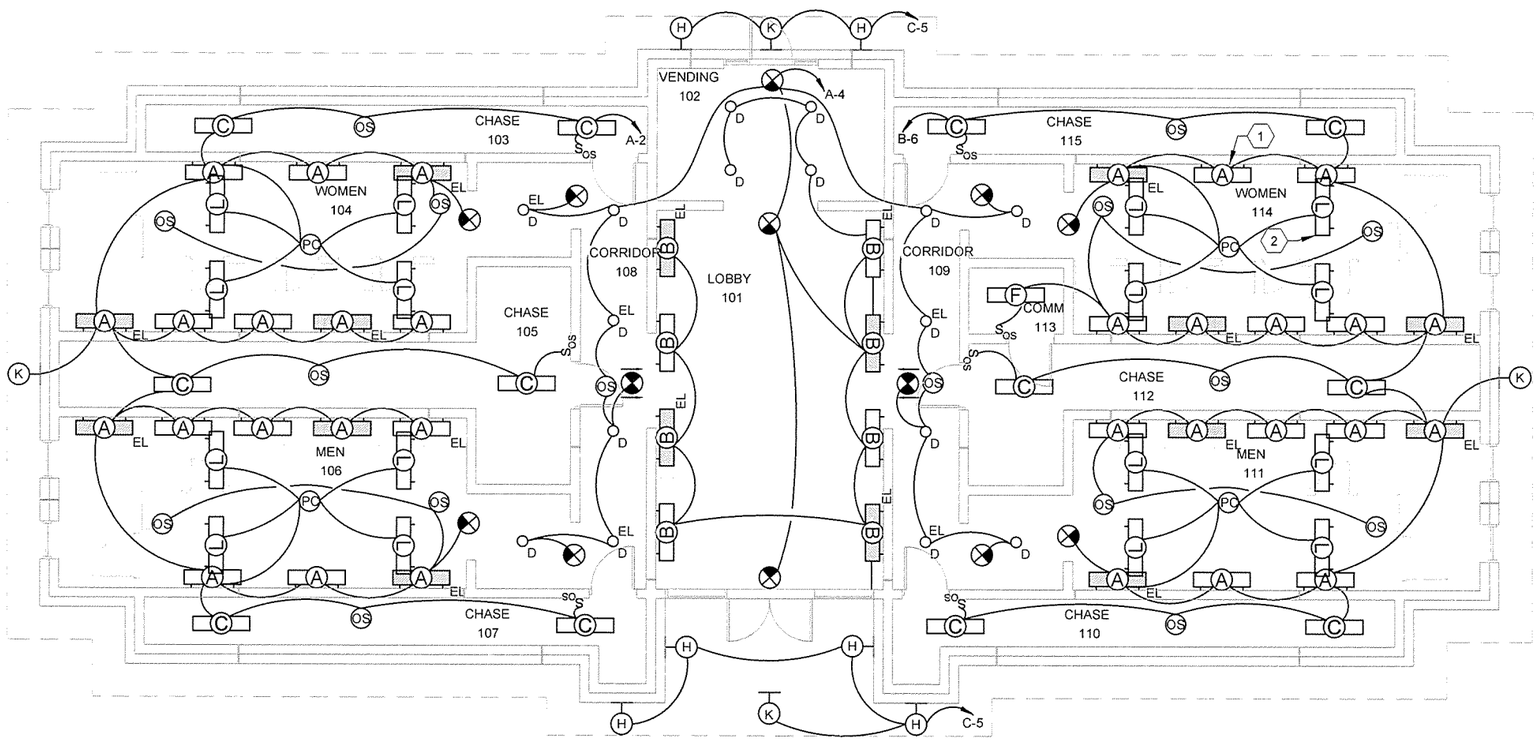


PROJECT NORTH

1 / E-101 LIGHTING PLAN - TOURIST INFORMATION CENTER

SCALE: 3/16" = 1'-0"

0 2' 4' 10' 16'
SCALE: 3/16" = 1'-0"


GARVER
4701 Northshore Drive
N Little Rock, AR 72118
501-376-3633
www.GarverUSA.com


CERTIFICATE OF AUTHORIZATION ARKANSAS ENGINEER GARVER LLC No. 766

STATE OF ARKANSAS LICENSED PROFESSIONAL ENGINEER No. 12569 BRYAN TODD MELTON 10/1/15

| Symbol | Description | Date | Appr |
|---|---|---|---|
| IFC | ISSUED FOR CONSTRUCTION | 10/1/15 | JRR |

Designed by: B. MELTON
Drawn by: H. HOOVER
Checked by: S. FEEZOR
Submitted by: John T. Hodges III, PE, SE, Director, Federal Services
Plot Date: 9/29/15
Plot Scale: 1:1
Drwg Code: -
File Name: AH15WR-E-101.DWG
Job Number: 060451
N/A
N/A
N/A

ARKANSAS HIGHWAY AND TRANSPORTATION DEPARTMENT
ARKANSAS TOURIST INFORMATION CENTER
(WHITE RIVER) (S)
JOB 061451

TOURIST INFORMATION CENTER
LIGHTING PLAN

Sheet Reference Number:
E-101

## KEYED NOTES

1. NFDS, 30A, 2 POLE, NEMA 3R
2. NFDS, 60A, 2 POLE, NEMA 3R
3. HAND DRYER
4. REFER TO DETAILS 5/P-501 AND 9/P-501 FOR EXACT LOCATION OF BACK BOX FOR SENSORS. FEILD COORDINATE WITH ALL TRADES.
5. NFDS 30A, 2POLE, NEMA 1
6. NFDS 60A, 2 POLE, NEMA 1

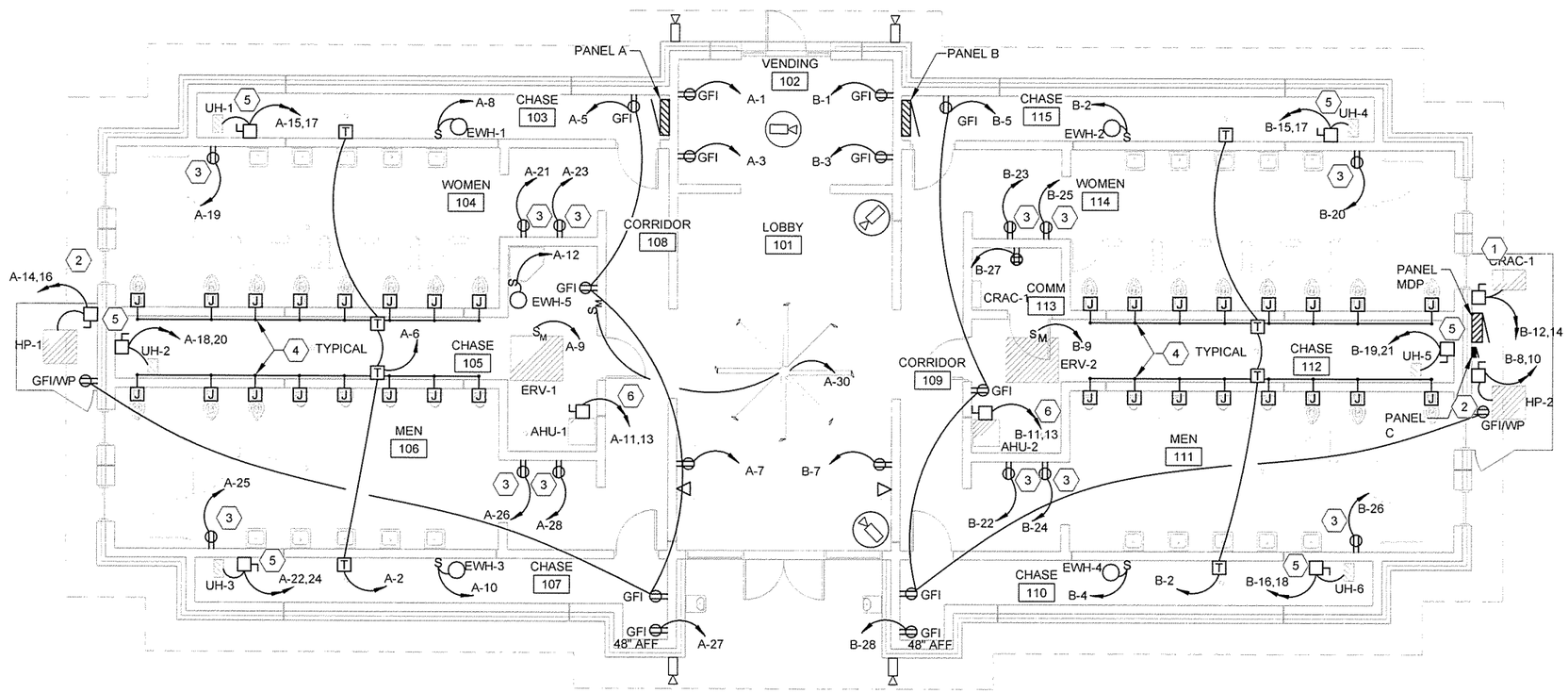


PROJECT NORTH

1 / E-102

## POWER & SYSTEMS PLAN - TOURIST INFORMATION CENTER

SCALE: 3/16" = 1'-0"

0 2' 4' 10' 16'

SCALE: 3/16" = 1'-0"


GARVER
4701 Northshore Drive
N Little Rock, AR 72118
501-376-3633
www.GarverUSA.com


CERTIFICATE OF AUTHORIZATION
GARVER LLC
No. 766
ARKANSAS ENGINEER

STATE OF ARKANSAS
LICENSED PROFESSIONAL ENGINEER
No. 12569
BRYAN TODD MELTON

| Symbol | Description | Date | Appr |
|---|---|---|---|
| IFC | ISSUED FOR CONSTRUCTION | 10/1/15 | JRR |

Job Number: 060451

Submitted by: John T. Watkins, III, PE, SE, Director, Federal Services

Designed by: B. MELTON

Drawn by: H. HOOVER

Plot Date: 9/29/15

Plot Scale: 1:1

Checked by: S. FEEZOR

Dwg Code: -

File Name: AH15WR-E-102.DWG

ARKANSAS HIGHWAY AND TRANSPORTATION DEPARTMENT
ARKANSAS TOURIST INFORMATION CENTER
(WHITE RIVER) (S)
JOB 061451

TOURIST INFORMATION CENTER
POWER & SYSTEMS PLAN

Sheet Reference Number:

E-102

## KEYED NOTES

1. NFDS, 60A, 2 POLE, NEMA 1

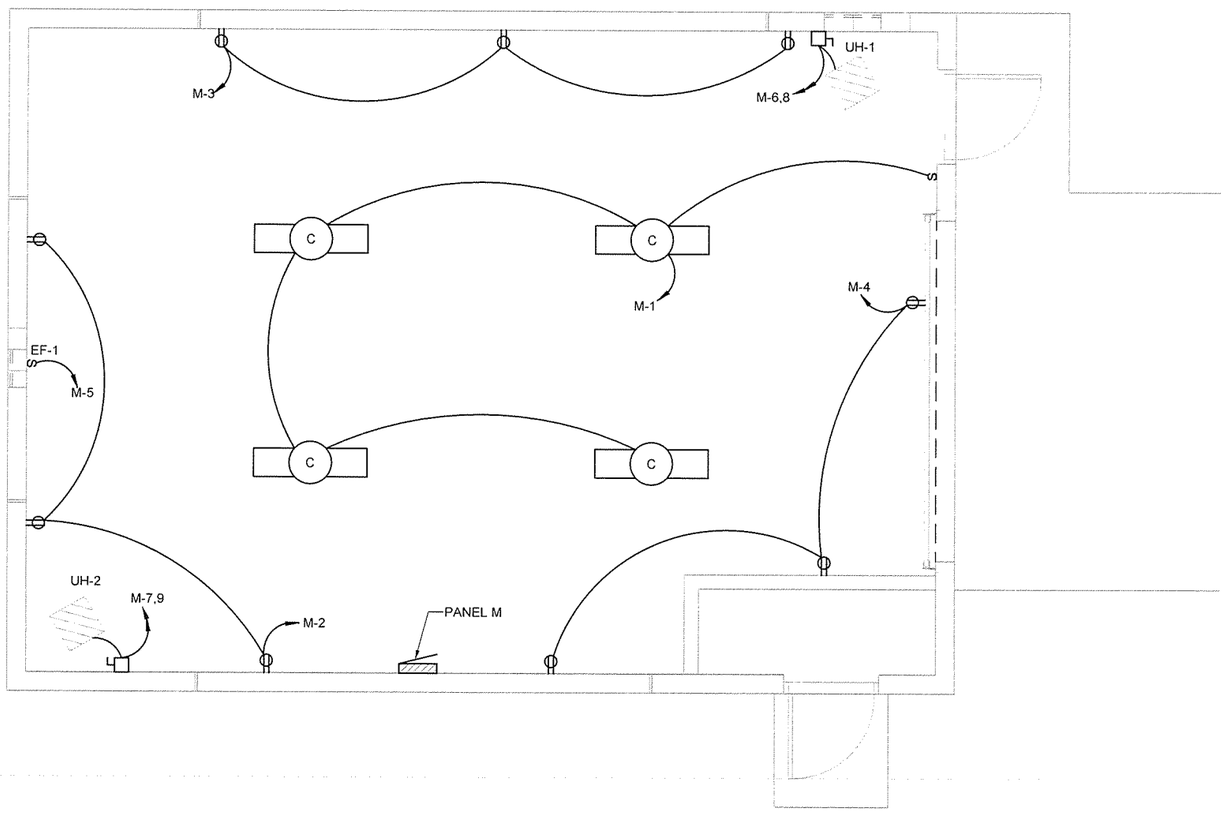


PROJECT NORTH

1 / E-121

## ELECTRICAL PLAN - MAINTENANCE BUILDING

SCALE: 3/8" = 1'-0"

0 1' 2' 5' 8'

SCALE: 3/8" = 1'-0"


GARVER
4701 Northshore Drive
N Little Rock, AR 72118
501-376-3633
www.GarverUSA.com


CERTIFICATE OF AUTHORIZATION ARKANSAS ENGINEER
GARVER LLC No. 766

STATE OF ARKANSAS
LICENSED PROFESSIONAL ENGINEER
No. 12569
BRYAN TODD MELTON

| Symbol | Description | Date | Appr |
|---|---|---|---|
| IFC | ISSUED FOR CONSTRUCTION | 10/1/15 | JRR |

| | | | |
|---|---|---|---|
| Designed by: B. MELTON | Submitted by: John T. Williams III, PE, SE, Director, Federal Services | | Job Number: 060451 |
| Drawn by: H. HOOVER | Plot Date: 9/29/15 | Plot Scale: 1:1 | N/A |
| Checked by: S. FEEZOR | Dwg Code: . | Dwg Code: . | N/A |
| File Name: AHTSWR-E-121 DWG | | | N/A |

ARKANSAS HIGHWAY AND TRANSPORTATION DEPARTMENT
ARKANSAS TOURIST INFORMATION CENTER
(WHITE RIVER) (S)
JOB 061451

MAINTENANCE BUILDING
ELECTRICAL PLAN

Sheet Reference Number:

E-121

## KEYED NOTES

1. MOUNT FIXTURE 9' AFF, TYPICAL.
2. HAND DRYER.
3. 30A NFDS, 2 POLE, NEMA 1
4. 30A NFDS, 2 POLE, NEMA 3R
5. REFER TO DETAILS 5/P-501 AND 9/P-501 FOR EXACT LOCATION OF BACK BOX FOR SENSORS. FIELD COORDINATE WITH ALL TRADES.
6. REFER TO A-431 FOR MOUNTING HEIGHT AND EXACT LOCATION. TYPICAL FOR TYPE A FIXTURES.
7. REFER TO A-232 FOR MOUNTING HEIGHT AND EXACT LOCATION. TYPICAL FOR TYPE K FIXTURES.

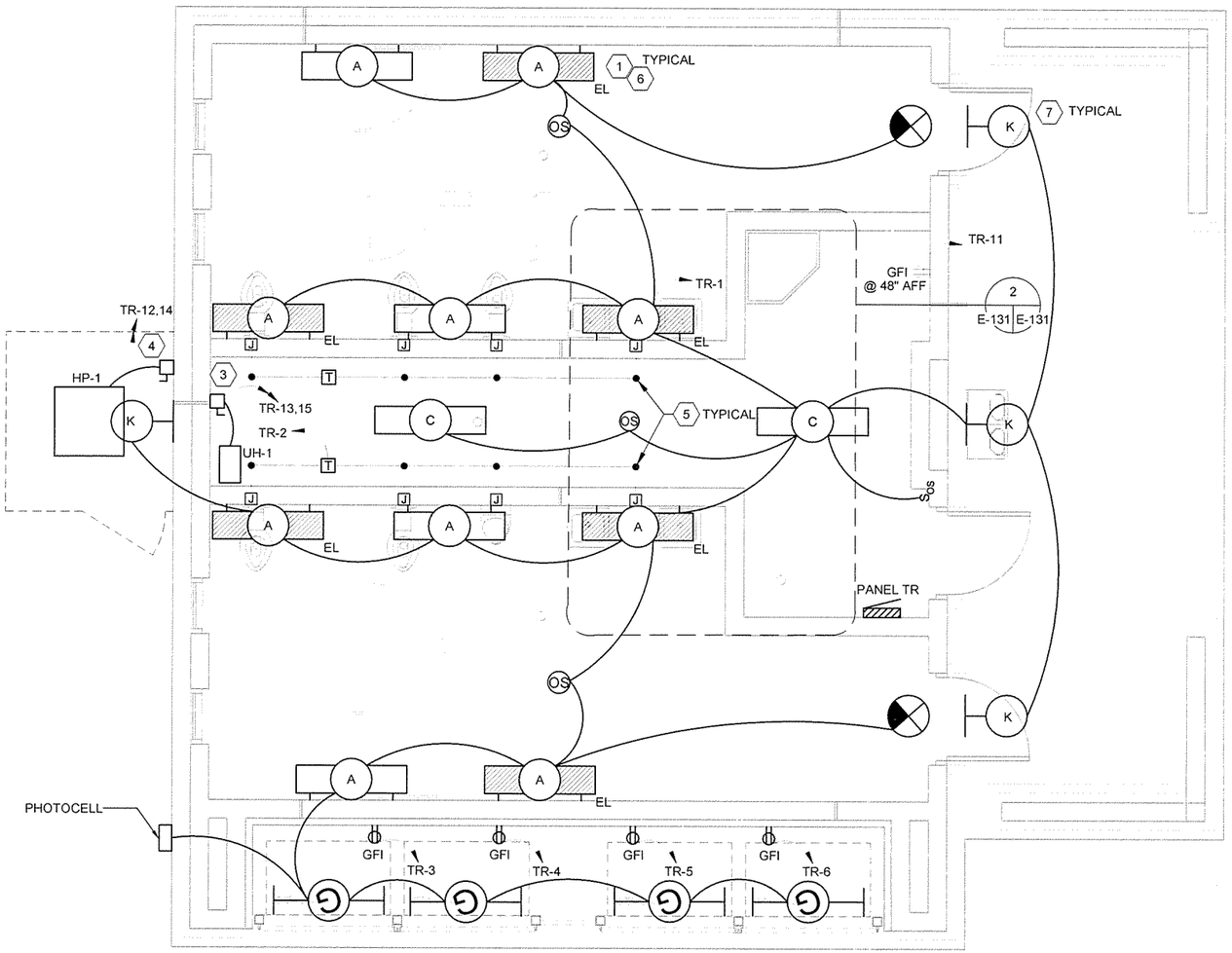


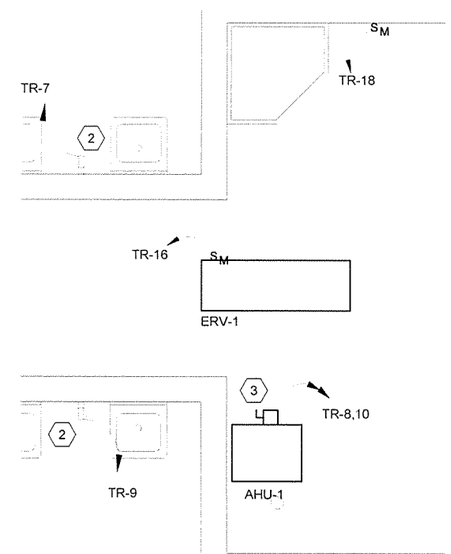


PROJECT NORTH

1 / E-131 ELECTRICAL PLAN - TRUCKER-VENDING

SCALE: 3/8" = 1'-0"

PROJECT NORTH

2 / E-131 PARTIAL POWER PLAN

SCALE: 1/2" = 1'-0"

0 1' 2' 5' 8'
SCALE: 3/8" = 1'-0"

0 1' 2' 4' 6'
SCALE: 1/2" = 1'-0"


GARVER
4701 Northshore Drive
N Little Rock, AR 72118
501-376-3633
www.GarverUSA.com


CERTIFICATE OF AUTHORIZATION
GARVER LLC
No. 766
ARKANSAS ENGINEER

STATE OF ARKANSAS
LICENSED PROFESSIONAL ENGINEER
No. 12565
BRYAN TODD MELTON

| Symbol | Description | Date | Appr |
|---|---|---|---|
| IFC | ISSUED FOR CONSTRUCTION | 10/1/15 | JRR |

Designed by: B. MELTON
Drawn by: H. HOOVER
Checked by: S. FEEZOR
Submitted by: John T. Watkins, III, PE, SE, Director, Federal Services
Plot Date: 9/29/15
Plot Scale: 1:1
Drwg Code: -
File Name: AH15WR-E-131.DWG
Job Number: 060451
N/A
N/A
N/A

ARKANSAS HIGHWAY AND TRANSPORTATION DEPARTMENT
ARKANSAS TOURIST INFORMATION CENTER
(WHITE RIVER) (S)
JOB 061451

TRUCKER-VENDING BUILDING
ELECTRICAL PLAN

Sheet Reference Number:
E-131

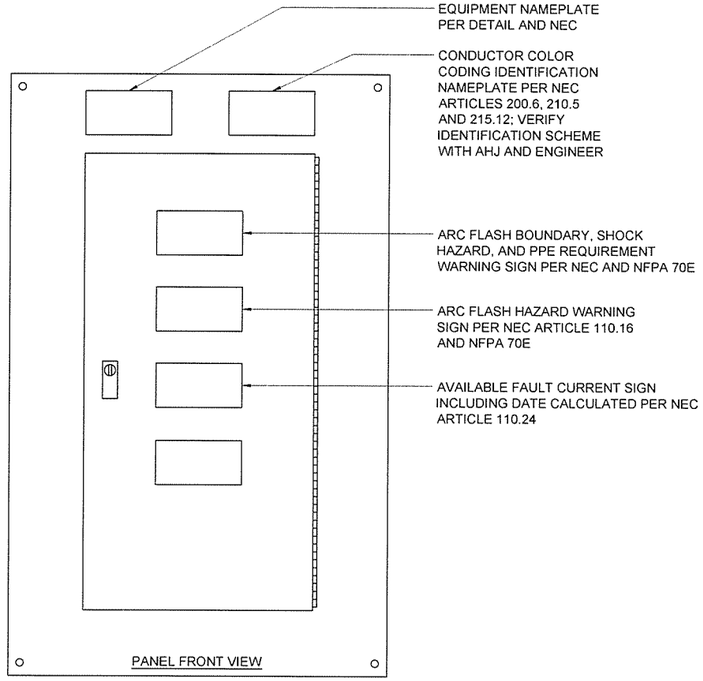


GENERAL NOTE:

1. INSTALL ALL NAMEPLATES AND WARNING SIGNS IN ACCORDANCE WITH NEC AND NFPA 70E REQUIREMENTS.
2. INSTALL NAMEPLATES AND WARNING SIGNS ON ALL ELECTRICAL EQUIPMENT, INCLUDING BUT NOT LIMITED TO, SWITCHBOARDS, PANELBOARDS, TRANSFORMERS, SWITCHES, CONTROL PANELS AND MOTOR CONTROL CENTERS.
3. EXTERIOR EQUIPMENT SHALL HAVE WEATHER-RESISTANT, NON-FADING NAMEPLATES AND SIGNAGE.
4. INSTALL CIRCUIT DIRECTORY AND/OR CIRCUIT IDENTIFICATION FOR PROPER FIELD IDENTIFICATION.
5. REFER TO SPECIFICATIONS FOR ADDITIONAL REQUIREMENTS.

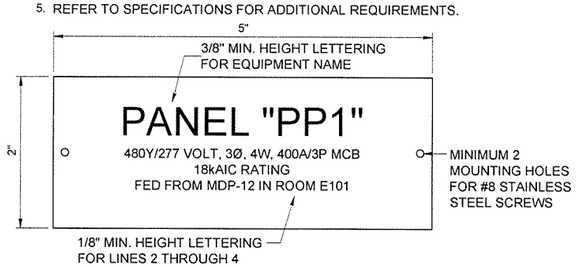


EQUIPMENT NAMEPLATE NOTES:

1. INSTALL 2-PLEX ACRYLIC, WHITE ON BLACK CORE, 5"x2" TILE, TEXT LINES AS INDICATED, CUSTOM ENGRAVED NAME PLATES.
2. MOUNT WITH STAINLESS STEEL SCREWS.
3. SEAL SCREW HOLES WITH SILICONE RUBBER.
4. NAMEPLATE INFORMATION SHALL INCLUDE:
   A. IDENTIFICATION NAME.
   B. VOLTAGE SYSTEM, AND AMPACITY RATING AND TYPE.
   C. EQUIPMENT AIC RATING.
   D. FEEDER SOURCE OF SUPPLY DESCRIPTION.
5. COORDINATE NAMEPLATE INFORMATION FOR EACH PIECE OF EQUIPMENT.

## 1 / E-501 TYPICAL ENGRAVED NAMEPLATE AND SIGNAGE DETAIL

SCALE: NONE

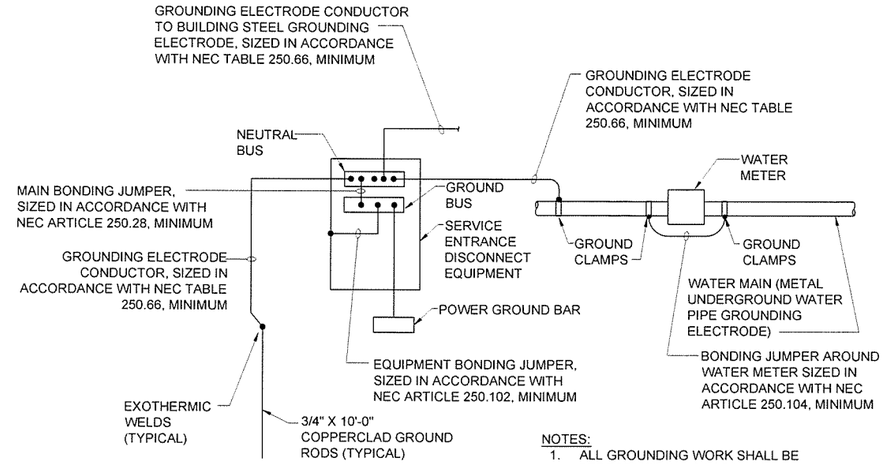


NOTES:

1. ALL GROUNDING WORK SHALL BE PERFORMED IN ACCORDANCE WITH NEC ARTICLE 250 - GROUNDING.
2. REFER TO SPECIFICATIONS FOR ADDITIONAL GROUNDING INFORMATION AND REQUIREMENTS.

## 2 / E-501 GROUNDING SYSTEM CONNECTIONS DETAIL

SCALE: NONE

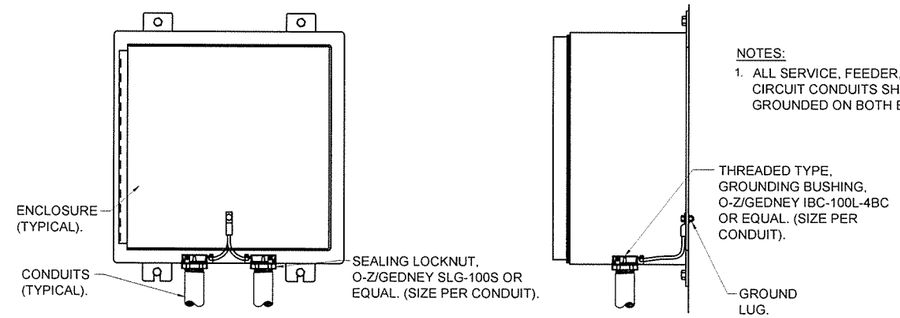


NOTES:

1. ALL SERVICE, FEEDER, AND BRANCH CIRCUIT CONDUITS SHALL BE GROUNDED ON BOTH ENDS.

## 3 / E-501 CONDUIT GROUNDING DETAIL

SCALE: NONE

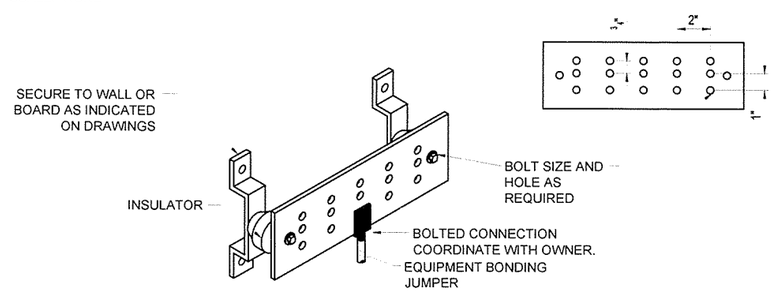


GROUNDING BAR NOTES:

1. COPPER GROUND BAR WITH WALL MOUNTING BRACKETS AND INSULATORS SPACED 24" ON CENTER MAX.
2. DIMENSIONS: 1/4" THICK, 4" HIGH, LENGTH AS INDICATED ON DRAWINGS (MINIMUM SIZE-24").
3. ALL HOLES 7/16" UON.
4. MOUNT 24" AFF.

## 4 / E-501 GROUNDING BAR DETAIL (POWER)

SCALE: NONE

GARVER
4701 Northshore Drive
N Little Rock, AR 72118
501-376-3533
www.GarverUSA.com

CERTIFICATE OF AUTHORIZATION ARKANSAS ENGINEER GARVER LLC No. 766

STATE OF ARKANSAS LICENSED PROFESSIONAL ENGINEER No. 14569 BRYAN TODD MELTON 10/1/15

| IPC Symbol | ISSUED FOR CONSTRUCTION Description | 10/1/15 Date | JRR Appr. |
|---|---|---|---|

| | | | |
|---|---|---|---|
| Designed by B. MELTON | Submitted by John T. Watkins, III, PE, SE Director, Federal Services | Job Number 060451 | |
| Drawn by H. HOOVER | Plot Date 9/29/15 | Plot Scale 1:1 | N/A |
| Checked by S. FEEZOR | Dwg Code - | N/A | |
| File Name AHTSWR-E-501 DWG | | N/A | |

ARKANSAS HIGHWAY AND TRANSPORTATION DEPARTMENT
ARKANSAS TOURIST INFORMATION CENTER
(WHITE RIVER) (S)
JOB 061451

DETAILS I

Sheet Reference Number:

E-501

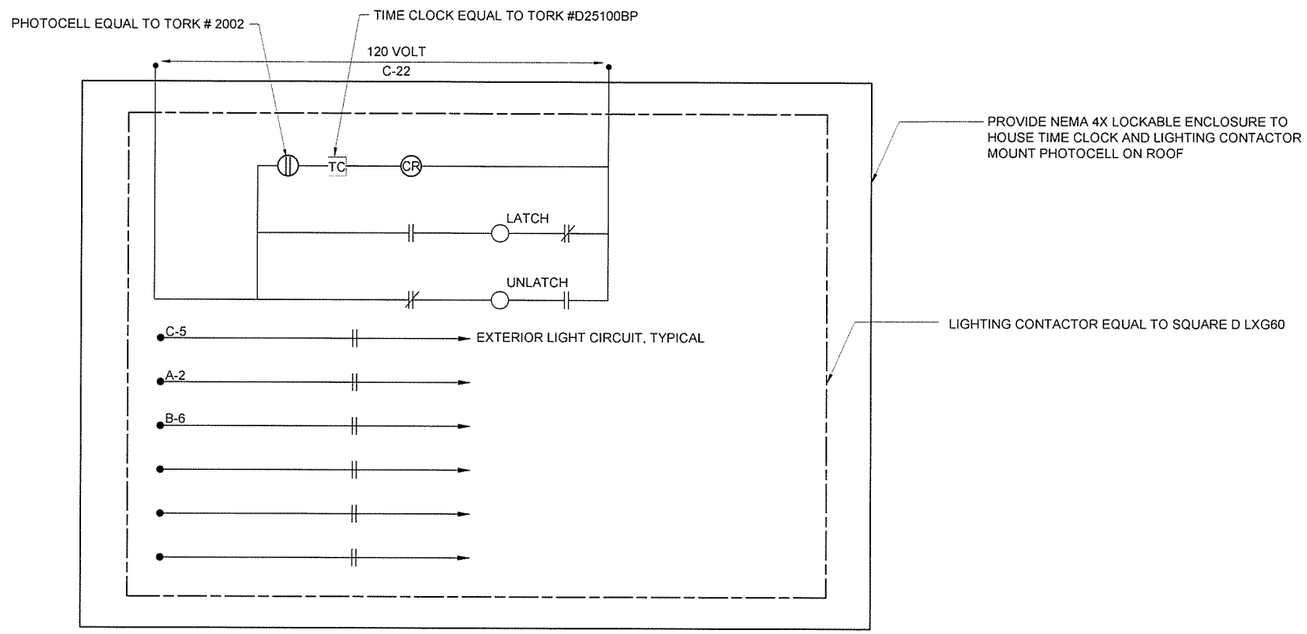


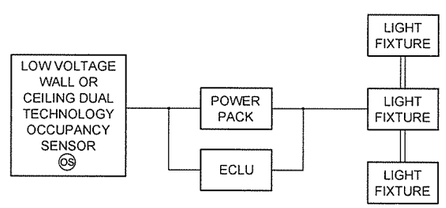


ONE SENSOR CONTROLLING ONE CIRCUIT

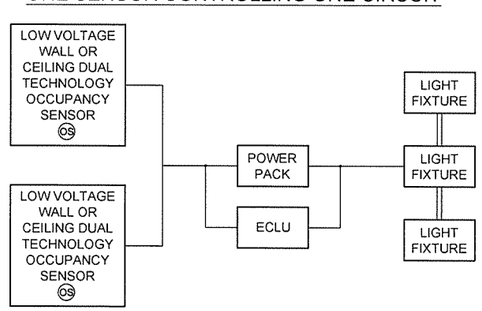


MULTIPLE SENSORS CONTROLLING ONE CIRCUIT

## SENSOR DIAGRAM NOTES:

1. REFER TO LIGHTING PLANS FOR LIGHTING CONTROL AND EQUIPMENT QUANTITY REQUIREMENTS.
2. REFER TO EQUIPMENT MANUFACTURER WIRING DIAGRAMS AND PRODUCT DATA SHEETS FOR ADDITIONAL REQUIREMENTS.
3. EMERGENCY LIGHTING CONTROL UNIT (WATTSTOPPER ECLU-200 OR APPROVED EQUAL) FOR FIXTURES IN PATH OF EGRESS ONLY.
4. MANUAL TOGGLE SWITCH ADJACENT TO WALL SWITCH PROVIDES OVERRIDE LIGHTING SHUTOFF. PROVIDE TWO 3-WAY SWITCHES WHERE TWO SHUT OFF LOCATIONS ARE REQUIRED.
5. POWER PACKS NOT SHOWN ON LIGHTING PLANS FOR CIRCUITING CLARITY.

LOW VOLTAGE AS RECOMMENDED BY MANUFACTURER.

LINE VOLTAGE AS SHOWN ON LIGHTING DRAWINGS.

1 / E-502 LIGHTING CONTROL CIRCUIT DIAGRAMS

SCALE: NONE

GARVER
4701 Northshore Drive
N Little Rock, AR 72118
501-376-3633
www.GarverUSA.com

CERTIFICATE OF AUTHORIZATION
GARVER LLC
No. 766
ARKANSAS ENGINEER

STATE OF ARKANSAS
LICENSED PROFESSIONAL ENGINEER
No. 12569
BRYAN TODD MELTON

| Symbol | Description | Date | Appr |
|---|---|---|---|
| IFC | ISSUED FOR CONSTRUCTION | 10/1/15 | JRR |

Designed by: B. MELTON
Submitted by: John T. Watkins, III, PE, SE, Director, Federal Services
Job Number: 060451
Drawn by: H. HOOVER
Plot Date: 9/29/15
Plot Scale: 1:1
N/A
Checked by: S. FEEZOR
Dwg Code:
N/A
File Name: AH15WR-E-502.DWG
N/A

ARKANSAS HIGHWAY AND TRANSPORTATION DEPARTMENT
ARKANSAS TOURIST INFORMATION CENTER
(WHITE RIVER) (S)
JOB 061451

DETAILS II

Sheet Reference Number:
E-502

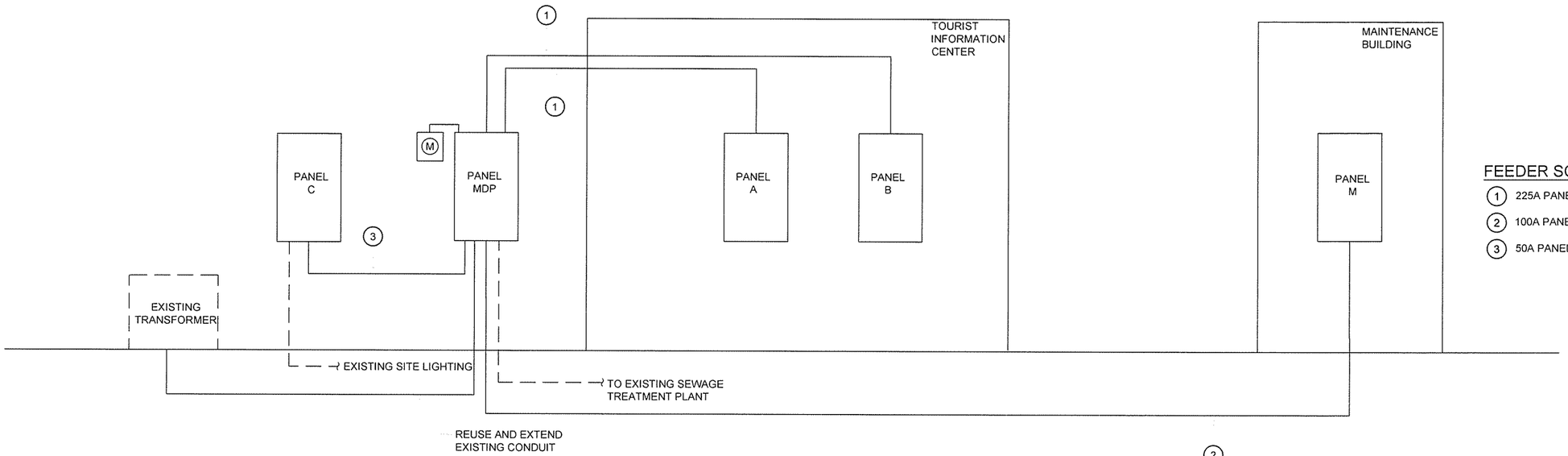


## FEEDER SCHEDULE

1. 225A PANEL FEEDER - (2#4/0+1#4/0N+1#2EG)2"C
2. 100A PANEL FEEDER - (2#3+1#3N+1#8EG)1"C
3. 50A PANEL FEEDER - (2#8+1#8N+1#10EG)1"C

1 / E-601 WHITE RIVER RISER DIAGRAM
SCALE: NONE

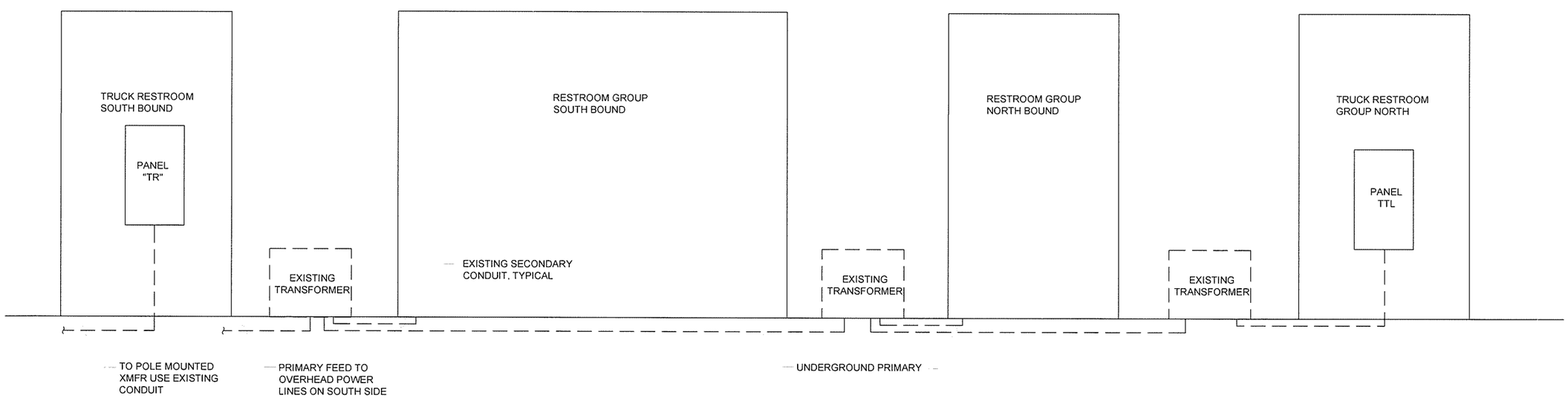


2 / E-601 WHITE RIVER PRIMARY DISTRIBUTION RISER DIAGRAM
SCALE: NONE


GARVER
4701 Northshore Drive
N Little Rock, AR 72118
501-376-3633
www.GarverUSA.com


CERTIFICATE OF AUTHORIZATION
GARVER LLC
No. 766
ARKANSAS ENGINEER

STATE OF ARKANSAS
LICENSED PROFESSIONAL ENGINEER
No. 12569
BRYAN TODD MELTON

| IPC Symbol | ISSUED FOR CONSTRUCTION Description | 10/1/15 Date | JRR Appr |
|---|---|---|---|

Designed by: B. MELTON
Submitted by: John T. Watkins, III, PE, SE, Director, Federal Services
Job Number: 060451
Drawn by: H. HOOVER
Plot Date: 9/29/15
Plot Scale: 1:1
N/A
Checked by: S. FEEZOR
Drwg Code:
N/A
File Name: AH15WR-E-601.DWG
N/A

ARKANSAS HIGHWAY AND TRANSPORTATION DEPARTMENT
ARKANSAS TOURIST INFORMATION CENTER
(WHITE RIVER) (S)
JOB 061451

RISER DIAGRAMS I

Sheet Reference Number:
E-601

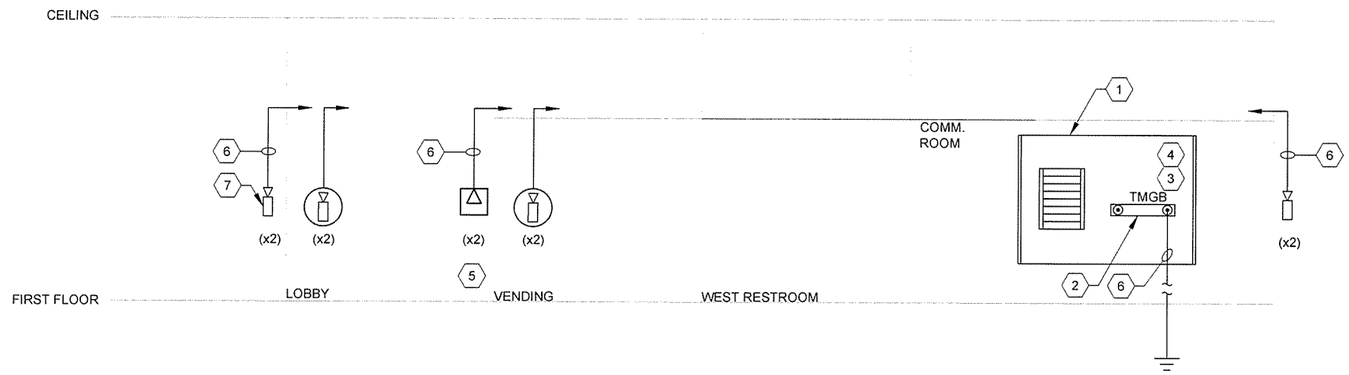


1 / E-601 TOURIST INFORMATION CENTER SYSTEM RISER DIAGRAM

SCALE: NONE

TELECOMMUNICATIONS RISER KEYED NOTES:

1. WALL MOUNTED TELECOMMUNICATION CABINET.
2. TELECOMMUNICATION TYPE GROUND BUS, COPPER, 1/4" X 4" X 24", PREDRILLED, MTD ON ISOLATORS.
3. PROVIDE 48-PORT, 8-PIN MODULE PATCH PANELS WITH 4-PAIR UTP PATCH CORDS FOR TERMINATION OF ALL CABLES, MAKE ALL FINAL CONNECTIONS. SEE SPECIFICATIONS FOR ADDITIONAL TELECOMMUNICATION DETAILS.
4. TELEPHONE MOUNTING BOARD USING 3/4" x 4' x 8' PLYWOOD SECTIONS, FIRE TREATED PLYWOOD ON WALLS INDICATED FROM FLOOR TO 8'-0" AFF FOR MOUNTING OF EQUIPMENT.
5. CATEGORY 6 DATA OUTLET WITH ONE JACK AND ONE DEDICATED CATEGORY 6 4-PAIR #24 AWG UTP CABLE HOMERUN IN CABLE TRAY, TERMINATE ALL CABLES AT PATCH PANELS (TYPICAL).
6. 1"C ROUTED TO CABINET.
7. OUTLET BOX.

GARVER
4701 Northshore Drive
N Little Rock, AR 72118
501-376-3533
www.GarverUSA.com

CERTIFICATE OF AUTHORIZATION
GARVER LLC
No. 766
ARKANSAS ENGINEER

STATE OF ARKANSAS
LICENSED PROFESSIONAL ENGINEER
10/1/15
REG. NO. 12569
BRIAN TODD MELTON

| Symbol | Description | Date | Appr. |
|---|---|---|---|
| IFC | ISSUED FOR CONSTRUCTION | 10/1/15 | JRR |

Designed by: B. MELTON
Submitted by: John T. Walters, III P.E., SE, Director, Federal Services
Job Number: 060451
Drawn by: H. HOOVER
Plot Date: 9/29/15
Plot Scale: 1:1
Checked by: S. FEEZOR
Dwg Code: -
File Name: AHISWR-E-602.DWG

ARKANSAS HIGHWAY AND TRANSPORTATION DEPARTMENT
ARKANSAS TOURIST INFORMATION CENTER
(WHITE RIVER) (S)
JOB 081451

RISER DIAGRAMS II

Sheet Reference Number:
E-602

## LIGHT FIXTURE SCHEDULE

| TYPE | DESCRIPTION | MANUFACTURER / CATALOG NUMBER | LAMPS NO. | LAMPS WATTS | LAMPS TYPE | VOLTAGE | MOUNTING | REMARKS |
|---|---|---|---|---|---|---|---|---|
| A | ARCHITECTURAL WALL MOUNT | TERON LIGHTING<br>BSCN48232E-120E-PRF-SM-W2L | 2 | 32 | F32 T8 | 120 | WALL | 3 5 |
| B | ARCHITECTURAL WALL MOUNT | LINEAR LIGHTING<br>C313P-B-3-ET5HO-120-NS/MBL-WMT-AP-EM-PSB10-4 | 3 | 28 | F28 T5 | 120 | WALL | 3 5 |
| C | 1'X4' STANDARD INDUSTRIAL | HE WILLIAMS<br>80-4- 4 32-EB2-120 | 2 | 32 | F32 T8 | 120 | SURFACE | 3 |
| D | 7.5" ROUND DOWNLIGHT | HE WILLIAMS<br>PHSD75-2 26Q - CPL-TP-EB2-120 | 2 | 26 | F26 | 120 | RECESSED | 3 5 |
| F | LOW-PROFILE WRAP | HE WILLIAMS<br>18-4-2 32-A-EB2-120 | 2 | 32 | F32 T8 | 120 | SURFACE | 3 |
| G | FULLY ENCLOSED INDUSTRIAL | HE WILLIAMS<br>95-4-1 32-HIAFR-WET/2-TP/SS LATCH-120 | 1 | 32 | F32 T8 | 120 | SURFACE | 2 3 5 |
| H | WALL MOUNTED LED | US ARCHITECTURAL<br>CBR5/12LED NW/RAL-7004/CFC | 1 | 14 | LED | 120 | WALL | 2 |
| K | ARCHITECTURAL WALL PACK | HE WILLIAMS<br>VWP V-LED32/740-T4-GRAY-EM/BSL722LT-PC-120 | 1 | 45 | LED | 120 | WALL | 2 |
| L | ARCHITECTURAL WALL PACK | LUMENPULSE<br>LCNRO - 120 - 48 - 40K - CL - WH - NO | 1 | 12 | LED | 120 | WALL | 2 |
| SA | SITE LIGHT | SELUX<br>SACL-R5-1-LG3500-40-14-SV-240 | 1 | 51 | LED | 120 | POLE | 2 |
| SB | SITE LIGHT | GE LIGHTING<br>ERS2-1-E3-D1-5-40-1-GRAY | 1 | 99 | LED | 120 | POLE | 2 |
| X | EXIT SIGN | HE WILLIAMS<br>EXIT-R-EM-WHT-SDT | 1 | 4 | LED | UNV | SURFACE | 1 2 4 |

## GENERAL NOTES:

1. COORDINATE THE INSTALLATION OF ELECTRICAL EQUIPMENT WITH THE ARCHITECT'S REFLECTED CEILING PLANS, MECHANICAL HVAC PLANS, AND FIRE PROTECTION PLANS.
2. SEE SPECIFICATIONS FOR ADDITIONAL FIXTURE AND LAMP REQUIREMENTS.
3. MAINTAIN INTEGRITY OF ALL FIRE RATED WALLS DUE TO CONDUIT WALL PENETRATIONS.
4. LAMP COLOR TEMPERATURE SHALL BE 3500K

## KEYED NOTES:

1. PROVIDE FIXTURE WITH UNIVERSAL MOUNTING HARDWARE. INSTALL FIXTURE FOR WALL OR CEILING MOUNTING. PROVIDE FIXTURE WITH SINGLE OR DOUBLE FACE AS INDICATED. PROVIDE ARROWS IF AND AS SHOWN.
2. PROVIDE FIXTURE LISTED AND LABELED FOR WET LOCATION.
3. PROVIDE FIXTURE WITH LATEST, < 10% THD ELECTRONIC BALLAST.
4. PROVIDE FIXTURE WITH SELF DIAGNOSTICS.
5. PROVIDE FIXTURE WITH INTEGRAL FLUORESCENT LAMP EMERGENCY BATTERY UNIT, 1400 LUMENS OUTPUT, 90 MINUTE EMERGENCY OPERATION WHERE INDICATED ON PLANS.

### Panel MDP

120 Volts L-N 1Ø, 3W
240 Volts L-L
65,000 AIC MTG. SPACE - 36"
800A MAIN CIRCUIT BREAKER
COPPER BUS
EQUIP. GROUNDING BAR
TYPE: I LINE HCM
NEMA 3R ENCLOSURE
SURFACE MOUNTED

| Service | Ckt. No. | Conn. Load | Brkr. | Wire Size | Phase AØ | Phase BØ | Wire Size | Brkr. | Conn. Load | Ckt. No. | Service |
|---|---|---|---|---|---|---|---|---|---|---|---|
| PANEL A | 1 | 27120 | 225/2 | 4/0 | | | 3 | 100/2 | 10896 | 2 | PANEL M |
| | 3 | 26942 | | 4/0 | | | 3 | | 11080 | 4 | |
| PANEL B | 5 | 30120 | 225/2 | 4/0 | | | 3 | 100/2 | 10768 | 6 | PANEL TR |
| | 7 | 22628 | | 4/0 | | | 3 | | 10352 | 8 | |
| PANEL C | 9 | 400 | 50/2 | 12 | | | | 20/1 | | 10 | SPARE |
| | 11 | 300 | | 12 | | | | 20/1 | | 12 | SPARE |
| SPARE | 13 | | 20/1 | | | | | 20/1 | | 14 | SPARE |
| SPARE | 15 | | 20/1 | | | | | 20/1 | | 16 | SPARE |
| SPARE | 17 | | 20/1 | | | | | 20/1 | | 18 | SPARE |
| SPARE | 19 | | 20/1 | | | | | 20/1 | | 20 | SPARE |
| | | AØ | | Totals | | | | | BØ | | |
| | | 107 510 | VA | | | | 150 606 | | 43 096 | | |
| | | 895.9 | AMPS | | | | 627.53 | | 359.1 | | |

### Panel M

120 Volts L-N 1Ø, 3W
240 Volts L-L Max No. Of Circuits:
10,000 AIC 42
100A MAIN CIRCUIT BREAKER
COPPER BUS
EQUIP. GROUNDING BAR
TYPE: NQOD
NEMA 1 ENCLOSURE
SURFACE MOUNTED

| Service | Ckt. No. | Conn. Load | Brkr. | Wire Size | Phase AØ | Phase BØ | Wire Size | Brkr. | Conn. Load | Ckt. No. | Service |
|---|---|---|---|---|---|---|---|---|---|---|---|
| LIGHTING | 1 | 256 | 20/1 | 12 | | | 12 | 20/1 | 540 | 2 | RECEPTACLES |
| RECEPTACLES | 3 | 540 | 20/1 | 12 | | | 12 | 20/1 | 540 | 4 | RECEPTACLES |
| EF-1 | 5 | 100 | 20/1 | 12 | | | 6 | 60/2 | 5000 | 6 | UH-1 |
| UH-2 | 7 | 5000 | 60/2 | 6 | | | 6 | | 5000 | 8 | |
| | 9 | 5000 | | 6 | | | | 20/1 | | 10 | SPARE |
| SPARE | 11 | | 20/1 | | | | | 20/1 | | 12 | SPARE |
| SPARE | 13 | | 20/1 | | | | | 20/1 | | 14 | SPARE |
| SPARE | 15 | | 20/1 | | | | | 20/1 | | 16 | SPARE |
| SPARE | 17 | | 20/1 | | | | | 20/1 | | 18 | SPARE |
| SPARE | 19 | | 20/1 | | | | | 20/1 | | 20 | SPARE |
| SPARE | 21 | | 20/1 | | | | | 20/1 | | 22 | SPARE |
| SPARE | 23 | | 20/1 | | | | | 20/1 | | 24 | SPARE |
| SPARE | 25 | | 20/1 | | | | | 20/1 | | 26 | SPARE |
| SPARE | 27 | | 20/1 | | | | | 50/2 | | 28 | SPD |
| SPARE | 29 | | 20/1 | | | | | | | 30 | |
| | | AØ | | Totals | | | | | BØ | | |
| | | 10 896 | VA | | | | 21 976 | | 11 080 | | |
| | | 90.8 | AMPS | | | | 91.57 | | 92.3 | | |


GARVER
4701 Northshore Drive
N Little Rock, AR 72118
501-376-3633
www.GarverUSA.com


CERTIFICATE OF AUTHORIZATION ARKANSAS ENGINEER GARVER LLC No. 766

STATE OF ARKANSAS LICENSED PROFESSIONAL ENGINEER BRYAN TODD MELTON

| Date | Appr. | Description | Symbol |
|---|---|---|---|
| 10/1/15 | JRR | ISSUED FOR CONSTRUCTION | IFC |

Job Number: 060-451

Submitted by: John T. Watkins, III, PE, SE, Director, Federal Services

Designed by: B. MELTON
Drawn by: H. HOOVER
Plot Date: 9/29/15
Plot Scale: 1:1
Checked by: S. FEEZOR
Dwg Code: -
File Name: AH15WR-E-603.DWG

ARKANSAS HIGHWAY AND TRANSPORTATION DEPARTMENT
ARKANSAS TOURIST INFORMATION CENTER
(WHITE RIVER) (S)
JOB 061451

SCHEDULES I

Sheet Reference Number:
E-603

## Panel A

120 Volts L-N 1Ø, 3W
240 Volts L-L Max No. Of Circuits:
25,000 AIC 42

225 MAIN LUGS ONLY
COPPER BUS
EQUIP. GROUNDING BAR

TYPE: NQOD
NEMA 1 ENCLOSURE
SURFACE MOUNTED

| Service | Ckt. No. | Conn. Load | Brkr. | Wire Size | Phase AØ | Phase BØ | Wire Size | Brkr. | Conn. Load | Ckt. No. | Service |
|---|---|---|---|---|---|---|---|---|---|---|---|
| RECEPTACLES VENDING 102 | 1 | 180 | 20/1 | 12 | | | 12 | 20/1 | 1512 | 2 | LIGHTING WEST |
| RECEPTACLES VENDING 102 | 3 | 180 | 20/1 | 12 | | | 12 | 20/1 | 1636 | 4 | LIGHTING CENTER |
| RECEPTACLES CORRIDOR 108 | 5 | 720 | 20/1 | 12 | | | 12 | 20/1 | 400 | 6 | RESTROOM SENSORS |
| RECEPTACLES LOBBY/MECH 101 | 7 | 180 | 20/1 | 12 | | | 12 | 20/1 | 1650 | 8 | EWH-1 |
| ERV-1 | 9 | 2640 | 25/1 | 10 | | | 12 | 20/1 | 1650 | 10 | EWH-3 |
| AHU-1 | 11 | 6360 | 60/2 | 6 | | | 12 | 20/1 | 1650 | 12 | EWH-5 |
| | 13 | 6360 | | 6 | | | 8 | 40/2 | 2760 | 14 | HP-1 |
| UH-1 | 15 | 2500 | 30/2 | 10 | | | 8 | | 2760 | 16 | |
| | 17 | 2500 | | 10 | | | 10 | 30/2 | 2500 | 18 | UH-2 |
| HAND DRYER RECEPTACLE | 19 | 2022 | 25/1 | 10 | | | 10 | | 2500 | 20 | |
| HAND DRYER RECEPTACLE | 21 | 2022 | 25/1 | 10 | | | 10 | 30/2 | 2500 | 22 | UH-3 |
| HAND DRYER RECEPTACLE | 23 | 2022 | 25/1 | 10 | | | 10 | | 2500 | 24 | |
| HAND DRYER RECEPTACLE | 25 | 2022 | 25/1 | 10 | | | 10 | 25/1 | 2022 | 26 | HAND DRYER RECEPTACLE |
| EWC | 27 | 500 | 20/1 | 12 | | | 10 | 25/1 | 2022 | 28 | HAND DRYER RECEPTACLE |
| SPARE | 29 | | 20/1 | | | | 12 | 20/1 | 468 | 30 | HVLS FAN |
| SPARE | 31 | | 20/1 | | | | | 20/1 | | 32 | SPARE |
| SPARE | 33 | | 20/1 | | | | | 20/1 | | 34 | SPARE |
| SPARE | 35 | | 20/1 | | | | | 20/1 | | 36 | SPARE |
| SPARE | 37 | | 20/1 | | | | | 20/1 | | 38 | SPARE |
| SPARE | 39 | | 20/1 | | | | | 20/1 | | 40 | SPARE |
| SPARE | 41 | | 20/1 | | | | | 20/1 | | 42 | SPARE |
| | | AØ | Totals | | | | | | BØ | | |
| | | 30 208 | VA | | 58 738 | | | | 28 530 | | |
| | | 251.7 | AMPS | | 244.74 | | | | 237.8 | | |

## Panel B

120 Volts L-N 1Ø, 3W
240 Volts L-L Max No. Of Circuits:
25,000 AIC 42

225A MAIN LUGS ONLY
COPPER BUS
EQUIP. GROUNDING BAR

TYPE: NQOD
NEMA 1 ENCLOSURE
SURFACE MOUNTED

| Service | Ckt. No. | Conn. Load | Brkr. | Wire Size | Phase AØ | Phase BØ | Wire Size | Brkr. | Conn. Load | Ckt. No. | Service |
|---|---|---|---|---|---|---|---|---|---|---|---|
| RECEPTACLES VENDING 102 | 1 | 180 | 20/1 | 12 | | | 12 | 20/1 | 1650 | 2 | EWH-2 |
| RECEPTACLES VENDING 102 | 3 | 180 | 20/1 | 12 | | | 12 | 20/1 | 1650 | 4 | EWH-4 |
| RECEPTACLES CORRIDOR 109 | 5 | 720 | 20/1 | 12 | | | 12 | 20/1 | 1512 | 6 | LIGHTING EAST |
| RECEPTACLES LOBBY/MECH 101 | 7 | 180 | 20/1 | 12 | | | 8 | 40/2 | 2760 | 8 | HP-2 |
| ERV-2 | 9 | 2640 | 25/1 | 10 | | | 8 | | 2760 | 10 | |
| AHU-2 | 11 | 6360 | 60/2 | 6 | | | 12 | 15/2 | 1200 | 12 | CRAC-1 |
| | 13 | 6360 | | 6 | | | 12 | | 1200 | 14 | |
| UH-4 | 15 | 2500 | 30/2 | 10 | | | 10 | 30/2 | 2500 | 16 | UH-6 |
| | 17 | 2500 | | 10 | | | 10 | | 2500 | 18 | |
| UH-5 | 19 | 2500 | 30/2 | 10 | | | 10 | 25/1 | 2022 | 20 | HAND DRYER RECEPTACLE |
| | 21 | 2500 | | 10 | | | 10 | 25/1 | 2022 | 22 | HAND DRYER RECEPTACLE |
| HAND DRYER RECEPTACLE | 23 | 2022 | 25/1 | 10 | | | 10 | 25/1 | 2022 | 24 | HAND DRYER RECEPTACLE |
| HAND DRYER RECEPTACLE | 25 | 2022 | 25/1 | 10 | | | 10 | 25/1 | 2022 | 26 | HAND DRYER RECEPTACLE |
| TTB | 27 | 1000 | 20/1 | 12 | | | 12 | 20/1 | 500 | 28 | EWC |
| SPARE | 29 | | 20/1 | | | | | 20/1 | | 30 | SPARE |
| SPARE | 31 | | 20/1 | | | | | 20/1 | | 32 | SPARE |
| SPARE | 33 | | 20/1 | | | | | 20/1 | | 34 | SPARE |
| SPARE | 35 | | 20/1 | | | | | 20/1 | | 36 | SPARE |
| SPARE | 37 | | 20/1 | | | | | 20/1 | | 38 | SPARE |
| SPARE | 39 | | 20/1 | | | | | 20/1 | | 40 | SPARE |
| SPARE | 41 | | 20/1 | | | | | 20/1 | | 42 | SPARE |
| | | AØ | Totals | | | | | | BØ | | |
| | | 31 664 | VA | | 57 984 | | | | 26 320 | | |
| | | 263.9 | AMPS | | 241.60 | | | | 219.3 | | |

## Panel TR

120 Volts L-N 1Ø, 3W
240 Volts L-L Max No. Of Circuits:
10,000 AIC 42

100A MAIN CIRCUIT BREAKER
COPPER BUS
EQUIP. GROUNDING BAR

TYPE: NQOD
NEMA 1 ENCLOSURE
SURFACE MOUNTED

| Service | Ckt. No. | Conn. Load | Brkr. | Wire Size | Phase AØ | Phase BØ | Wire Size | Brkr. | Conn. Load | Ckt. No. | Service |
|---|---|---|---|---|---|---|---|---|---|---|---|
| LIGHTING | 1 | 948 | 20/1 | 12 | | | 12 | 20/1 | 200 | 2 | RESTROOM SENSORS |
| RECEPTACLES VENDING | 3 | 1000 | 20/1 | 12 | | | 12 | 20/1 | 180 | 4 | RECEPTACLES VENDING AREA |
| RECEPTACLES VENDING | 5 | 1000 | 20/1 | 12 | | | 12 | 20/1 | 180 | 6 | RECEPTACLES VENDING AREA |
| HAND DRYER RECEPTACLE | 7 | 1000 | 20/1 | 12 | | | 10 | 30/2 | 2760 | 8 | AHU-1 |
| HAND DRYER RECEPTACLE | 9 | 1000 | 20/1 | 12 | | | 10 | | 2760 | 10 | |
| RECEPTACLES WATER COOLERS | 11 | 1000 | 20/1 | 12 | | | 12 | 20/1 | 1080 | 12 | HP-1 |
| UH-1 | 13 | 2500 | 30/2 | 10 | | | 12 | | 1080 | 14 | |
| | 15 | 2500 | | 10 | | | 10 | 25 | 2112 | 16 | ERV-1 |
| EXTERIOR LGT* | 17 | 200 | 20/1 | 12 | | | 12 | 20/1 | 1650 | 18 | EWH-6 |
| SPARE | 19 | | 20/1 | | | | | 20/1 | | 20 | SPARE |
| SPARE | 21 | | 20/1 | | | | | 20/1 | | 22 | SPARE |
| SPARE | 23 | | 20/1 | | | | | 20/1 | | 24 | SPARE |
| SPARE | 25 | | 20/1 | | | | | 20/1 | | 26 | SPARE |
| SPARE | 27 | | 20/1 | | | | | 20/1 | | 28 | SPARE |
| SPARE | 29 | | 20/1 | | | | | 20/1 | | 30 | SPARE |
| | | AØ | Totals | | | | | | BØ | | |
| | | 11 148 | VA | | 23 150 | | | | 12 002 | | |
| | | 92.9 | AMPS | | 96.46 | | | | 100.0 | | |

## Panel C

120 Volts L-N 1Ø, 3W
240 Volts L-L Max No. Of Circuits:
10,000 AIC 12

100A MAIN LUGS ONLY
COPPER BUS
EQUIP. GROUNDING BAR

TYPE: QO LOAD CENTER
NEMA 3R ENCLOSURE
SURFACE MOUNTED

| Service | Ckt. No. | Conn. Load | Brkr. | Wire Size | Phase AØ | Phase BØ | Wire Size | Brkr. | Conn. Load | Ckt. No. | Service |
|---|---|---|---|---|---|---|---|---|---|---|---|
| SB FIXTURES | 1 | 600 | 20/2 | 12 | | | 12 | 20/2 | 400 | 2 | SA FIXTURES |
| | 3 | 600 | | 12 | | | 12 | | 400 | 4 | |
| TIC LIGHTING | 5 | 174 | 20/1 | 12 | | | 12 | 20/1 | | 6 | SPARE |
| SPARE | 7 | | 20/1 | 12 | | | 12 | 20/1 | | 8 | SPARE |
| SPARE | 9 | | 20/1 | 12 | | | 12 | 20/1 | | 10 | SPARE |
| SPARE | 11 | | 20/1 | 12 | | | 12 | 20/1 | | 12 | SPARE |
| | | AØ | Totals | | | | | | | | |
| | | 1 374 | VA | | 2 174 | | | | 0 800 | | |
| | | 11.5 | AMPS | | 9.06 | | | | 6.7 | | |


GARVER
4701 Northshore Drive
N Little Rock, AR 72118
501-376-3633
www.GarverUSA.com


CERTIFICATE OF AUTHORIZATION
GARVER LLC
No. 766
ARKANSAS ENGINEER

STATE OF ARKANSAS
LICENSED PROFESSIONAL ENGINEER
No. 12569
BRYAN TODD MELTON

| Symbol | Description | Date | Appr. |
|---|---|---|---|
| IFC | ISSUED FOR CONSTRUCTION | 10/1/15 | JRR |

Job Number: 060451
Submitted by: John T. Watkins III, PE, SE, Director, Federal Services
Designed by: B. MELTON
Drawn by: H. HOOVER
Checked by: S. FEEZOR
File Name: AH15WR-E-604.DWG
Plot Date: 9/28/15
Plot Scale: 1:1
Dwg Code: -
N/A

ARKANSAS HIGHWAY AND TRANSPORTATION DEPARTMENT
ARKANSAS TOURIST INFORMATION CENTER
(WHITE RIVER) (S)
JOB 061451

SCHEDULES II

Sheet Reference Number:
E-604